MicroLine CCD Camera

MLx695 -- DISCONTINUED

High quantum efficiency and exceptionally low read noise give the MLx695 sensitivity down to microlux from visible to the near infrared. High spatial resolution makes the MLx695 ideal for low light applications such as fluorescence.

C-mount version; other mounts available

Technical Data

Sensor Type	Interline transfer CCD
Sensor	Sony ICX695
Active Pixels	2750 x 2200
Pixel Size (microns)	4.54 x 4.54 µm
Imaging Area (Diagonal)	12.5 X 10 mm (16 mm)
Full Well Capacity (e-)	17000 electrons
Typical_Readout Noise	3e- @ 1.7 MHz; 5.1e- @ 10 MHz
Dynamic Range	74.8 dB
Anti-Blooming	Yes (unspecified)
Cooling Method	Air (Optional liquid)
Max. Cooling (Air)	60°C below ambient
Temperature Stability	0.1°C
Dark Current (typical)	0.0007 eps at -30C
Interface	USB 2.0
Digitization Clock	1.7 MHz and 10 MHz
Data Bit Depth	16 bit
Non-Linearity	<1%
Channels	1 (optional 2)
Shutter	Electronic; optional 25 mm
Lens Mount	C-mount; optional Nikon or Canon
Subarray Readout	Standard
External Trigger In/Out	Standard
SDK / Software	USB2 / FLIGrab
Weight	2.8 lbs (1.2 kg)
Environment	-30°C to 45°C | 10% - 90% Relative Humidity
Power	

12V (100-240V AC to 12V DC power supply included). With TEC off: <1A. TEC at 100%: 4.4A. (Optional Electromechanical Shutter open: 4A pulse for 100msec. Shutter held open, add 0.22A.)

Absolute Quantum Efficiency

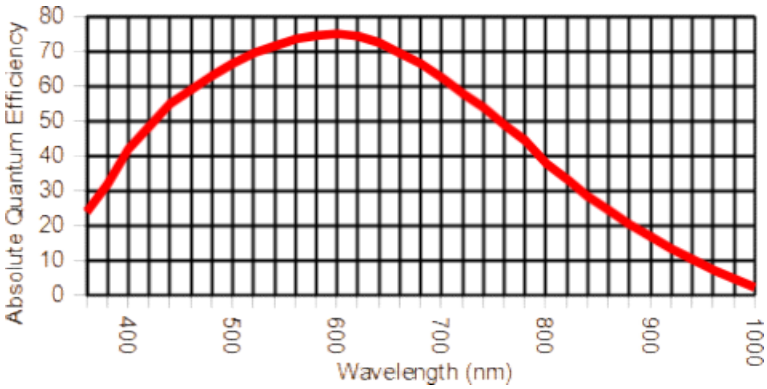

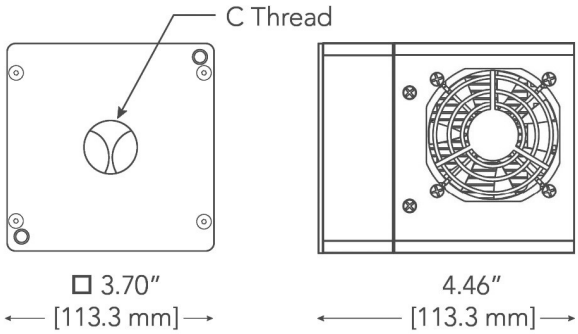

MADE IN USA

Finger Lakes Instrumentation
FLIcamera.com
USA 585-624-3760