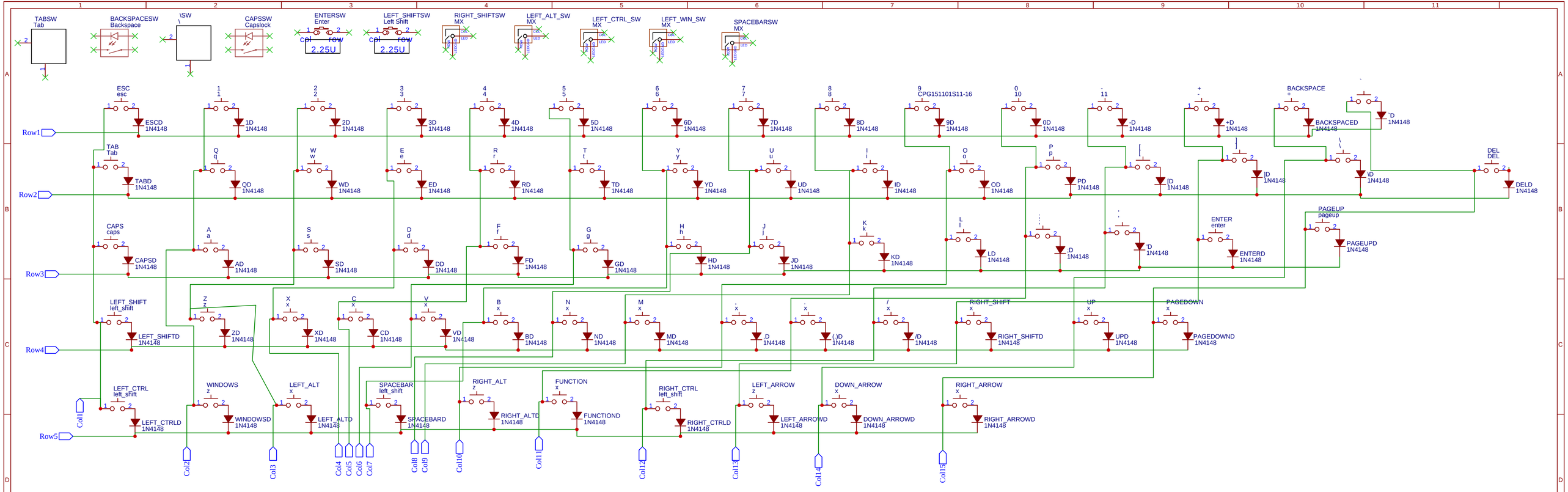

TITLE: Sheet_1		REV: 1.0
EasyEDA	Company: Your Company	Sheet: 1/1
	Date: 2025-02-24 Drawn By: krishveersinghkhurana	

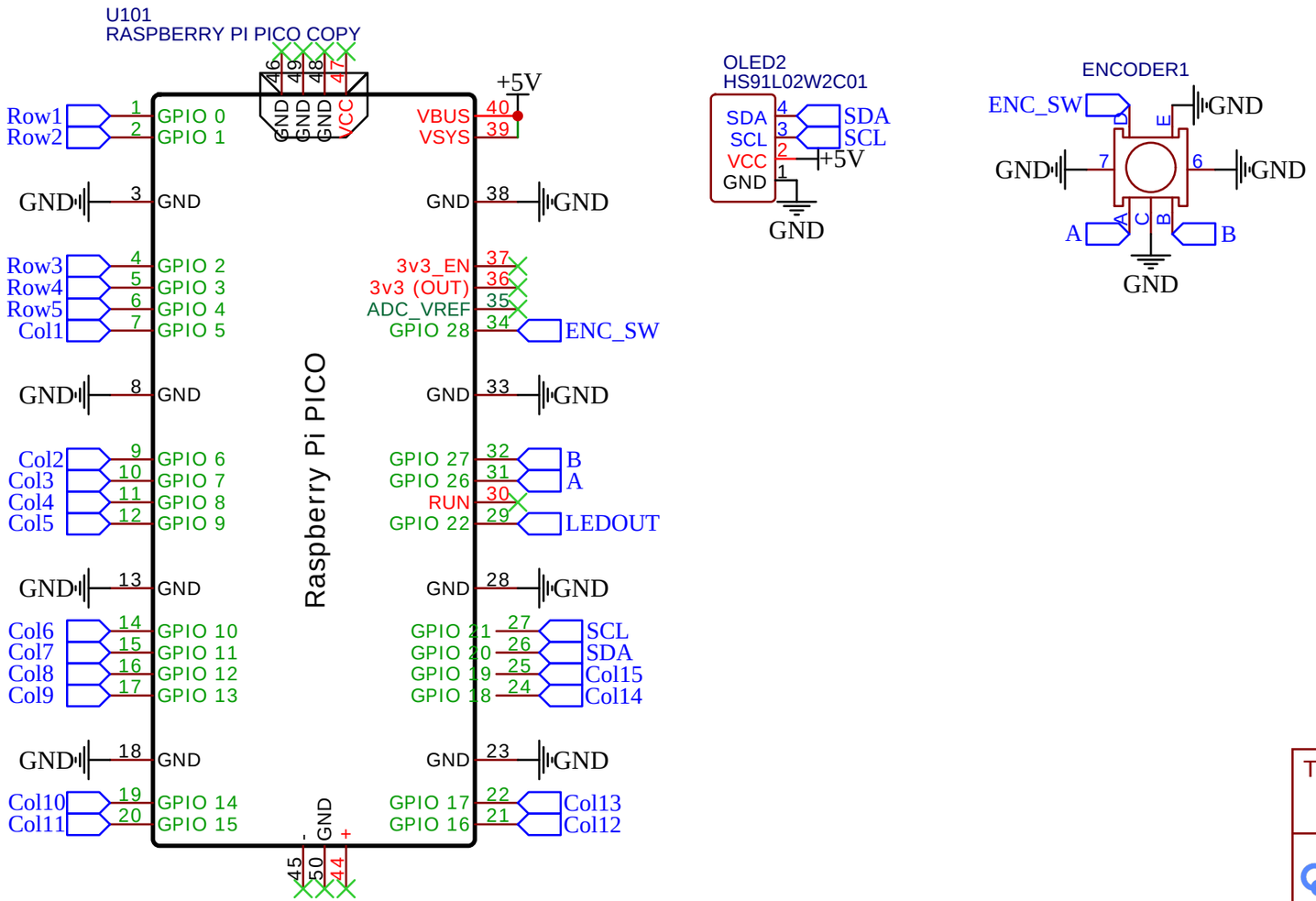

TITLE: Sheet_2		REV: 1.0
EasyEDA	Company: Your Company	Sheet: 1/1
	Date: 2025-02-24 Drawn By: krishveersinghkhurana	

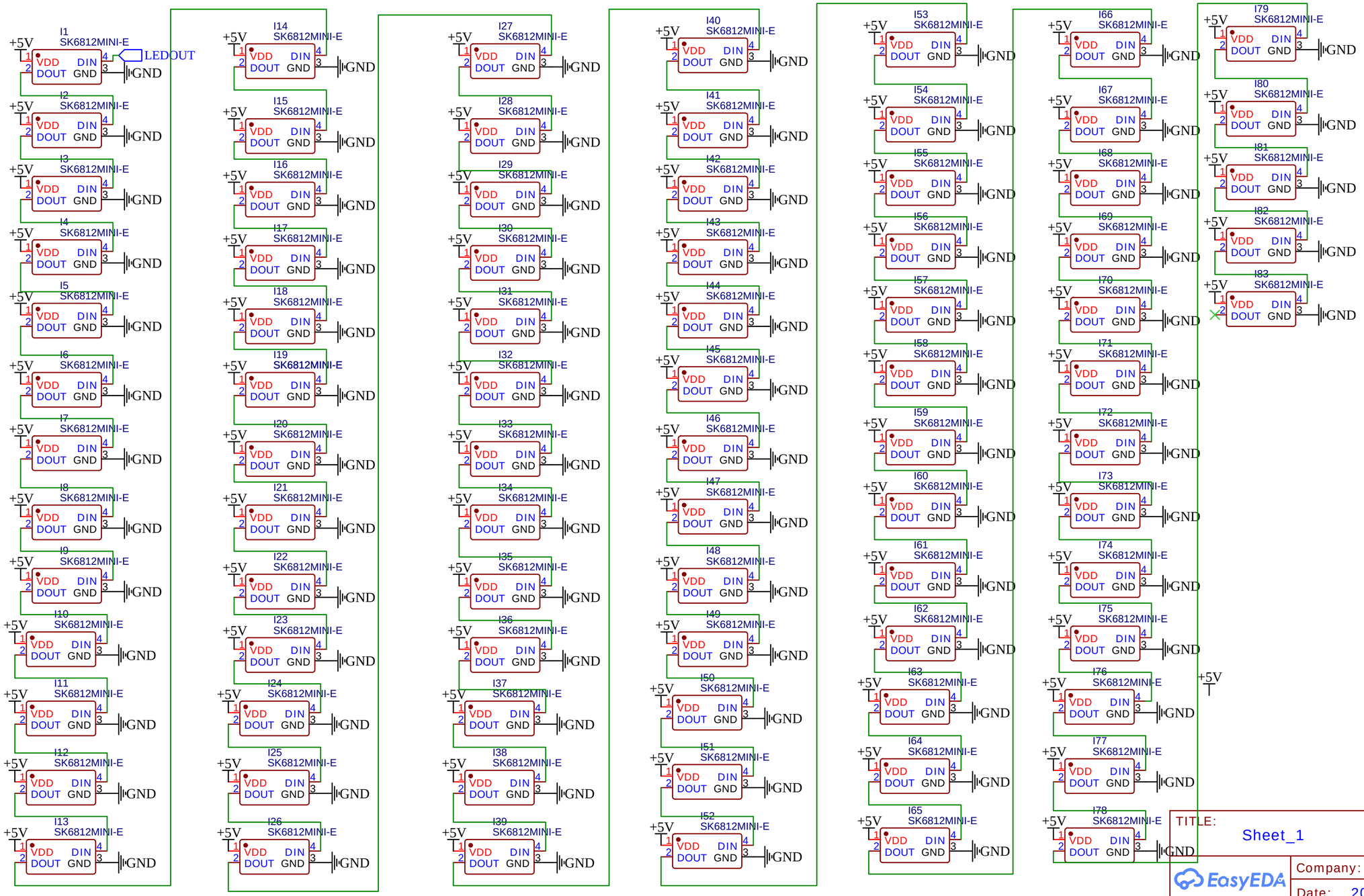

TITLE: Sheet_1	REV: 1.0
Company: Your Company	Sheet: 1/1
Date: 2025-03-15	Drawn By: krishveersinghkhurana

EasyEDA