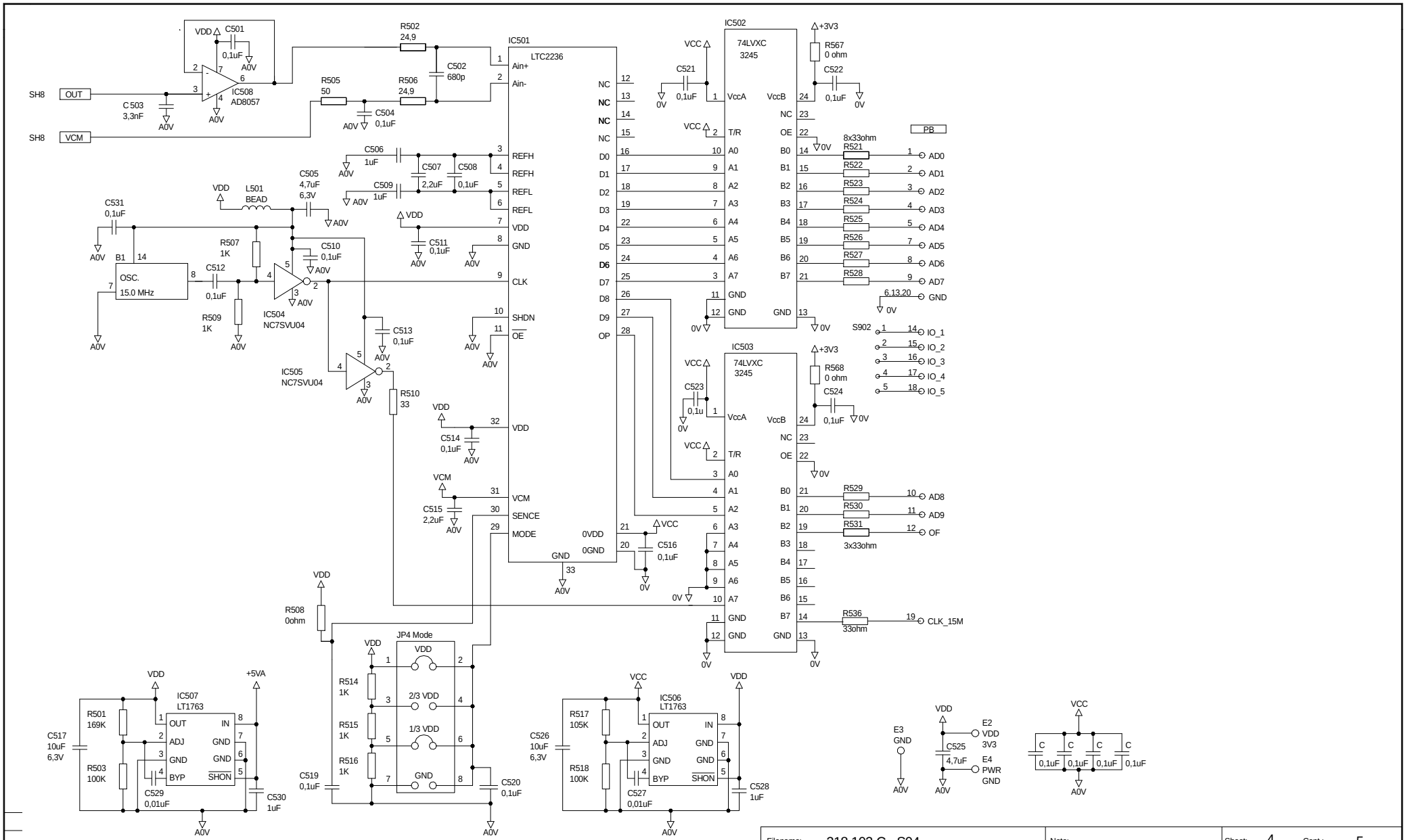

Filename:	218 102 C - S04	Note:	Sheet: 4	Cont.: 5
Constr.:	Drawn: BE	Accepted:	Date: 2012-10-11	Rev: 0
Björn Eliasson Ingenjörsfirma AB	CBME 120 MASTER BOARD		Draw. no 218 102 C	

Mod. No	Changing	Date		Accepted	