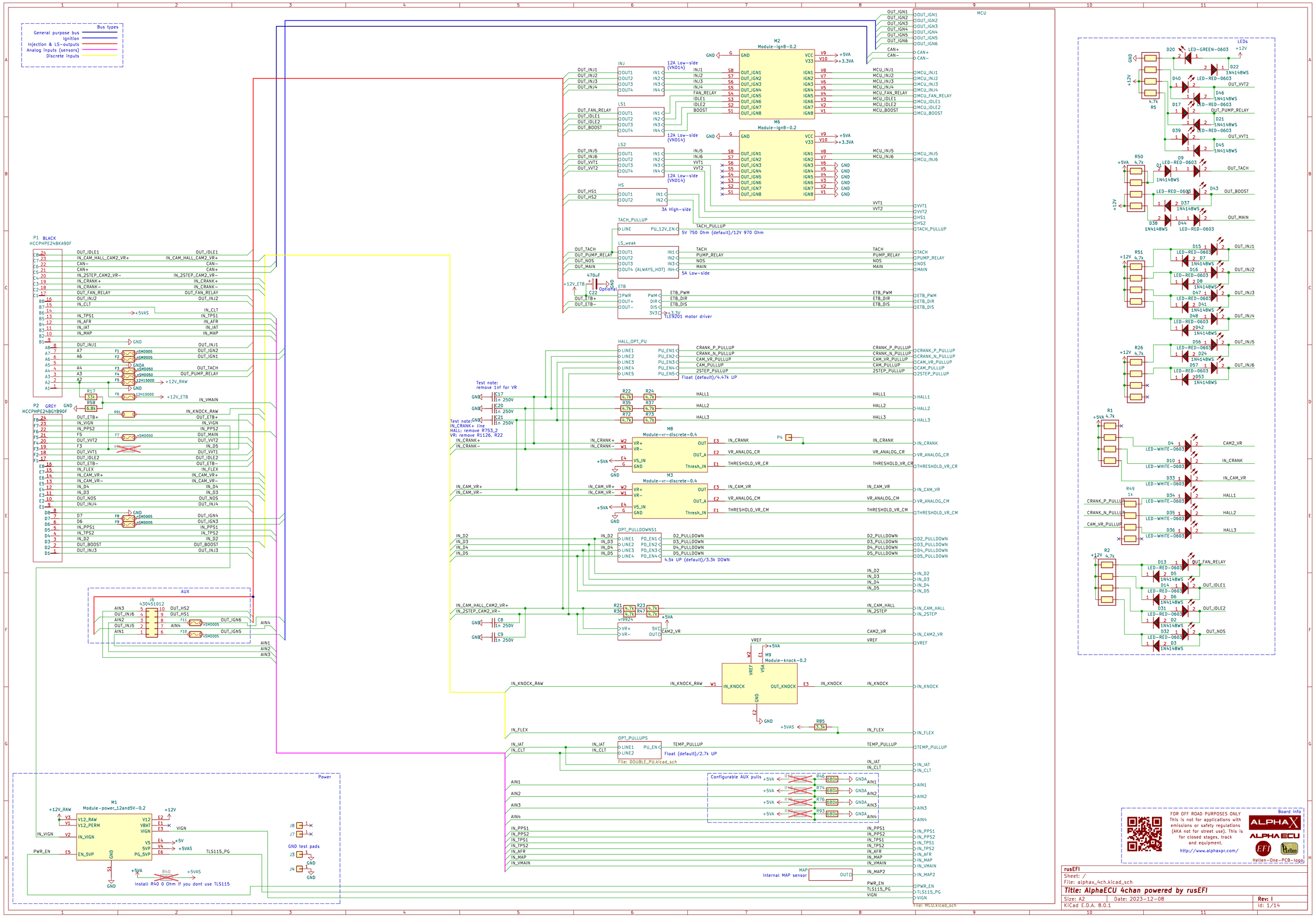
Bus types
General purpose bus
Ignition
Injection & LS-outputs
Analog inputs (sensors)
Discrete inputs
MCU
P1 BLACK
HCCPHPE24BKA90F
P2 GREY
HCCPHPE24BGYB90F
M2
Module-ignB-0.2
M6
Module-ignB-0.2
INJ
LS1
LS2
HS
TACH_PULLUP
LS_weak
ETB
TLE9201 motor driver
HALL_OPT_PU
M8
Module-vr-discrete-0.4
M3
Module-vr-discrete-0.4
OPT_PULLDOWNS1
4.5k UP (default)/3.3k DOWN
vr9924
M9
Module-knock-0.2
OPT_PULLUPS
Float (default)/2.7k UP
File: DOUBLE_PU.kicad_sch
Configurable AUX pulls
MAP
Internal MAP sensor
File: MCU.kicad_sch
AUX
J6
430451012
Power
M1
Module-power_12and5V-0.2
GND test pads
Install R40 0 Ohm if you dont use TLS115
LEDs
FOR OFF ROAD PURPOSES ONLY
This is not for applications with emissions or safety regulations (AKA not for street use). This is for closed stages, track and equipment.
http://www.alphaxpr.com/
Board info
Hellen-One-PCB-logo
rusEFI
Sheet: /
File: alphax_4ch.kicad_sch
Title: AlphaECU 4chan powered by rusEFI
Size: A2
Date: 2023-12-08
Rev: 1
KiCad E.D.A. 8.0.1
Id: 1/14

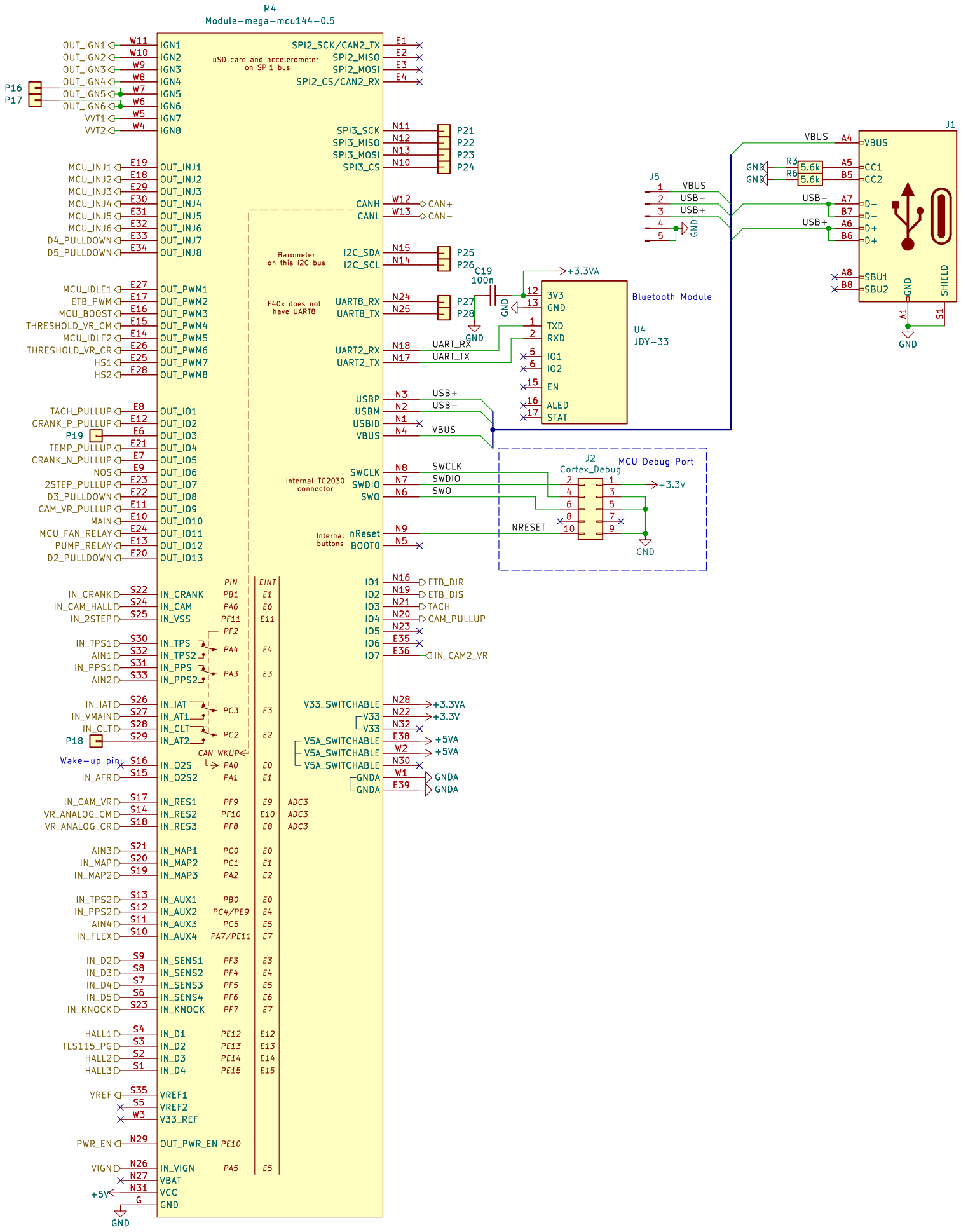

Sheet: /MCU/
File: MCU.kicad_sch

Title:

Size: A3	Date:	Rev:
KiCad E.D.A. 8.0.1		Id: 2/14

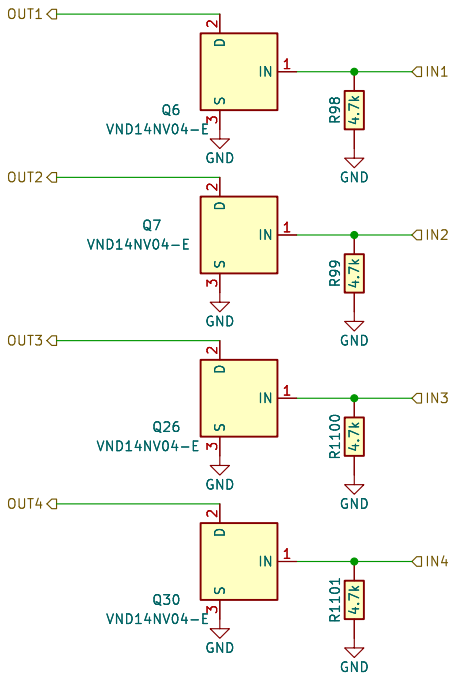

Sheet: /INJ/
File: INJ4.kicad_sch

Title:

Size: A4	Date:	Rev:
KiCad E.D.A. 8.0.1		Id: 3/14

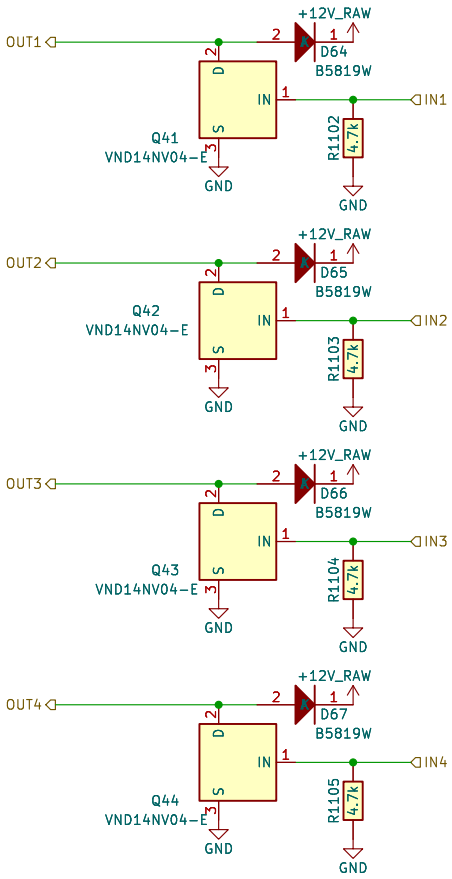

Sheet: /LS1/
File: LS4.kicad_sch

Title:

Size: A4	Date:	**Rev:**
KiCad E.D.A. 8.0.1		Id: 4/14

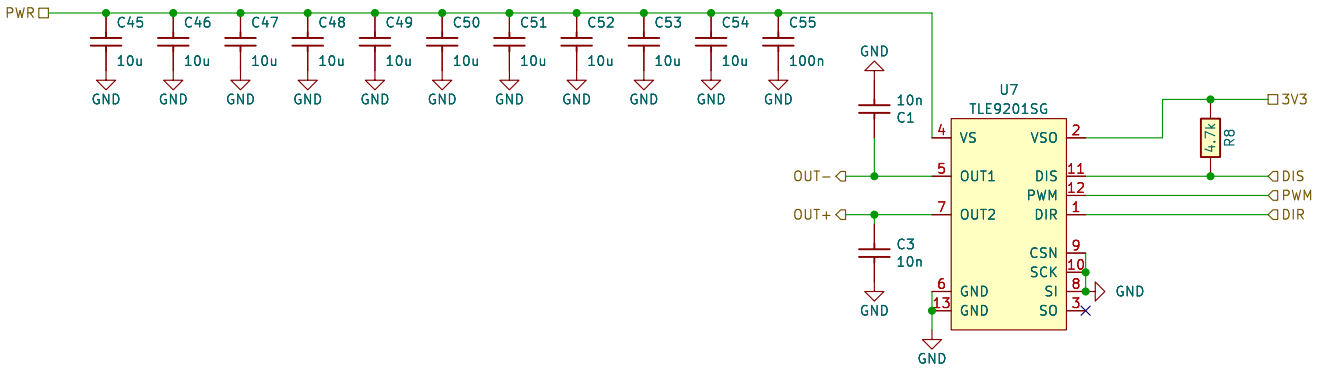

Sheet: /ETB/
File: DC_MOTOR_0.1.kicad_sch

Title: Hellen−One DC motor driver

Size: A4	Date: 2023−09−04	**Rev: 0.1**
KiCad E.D.A. 8.0.1		Id: 5/14

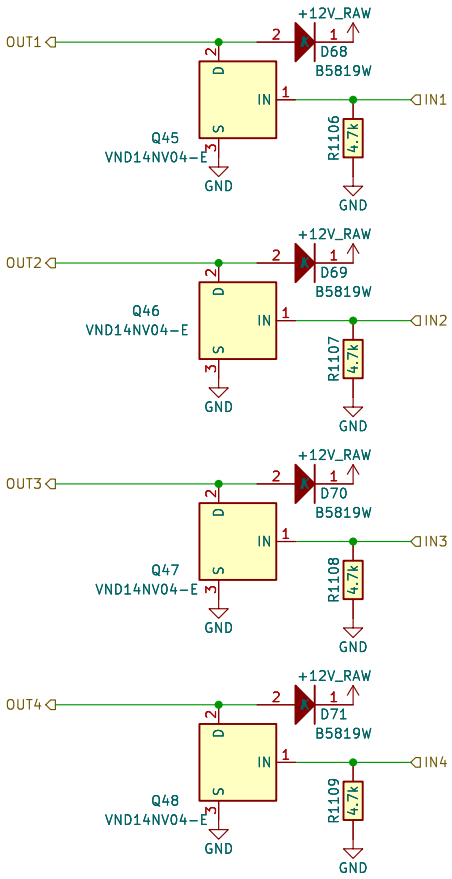

Sheet: /LS2/
File: LS4.kicad_sch

Title:

Size: A4	Date:	**Rev:**
KiCad E.D.A. 8.0.1		Id: 6/14

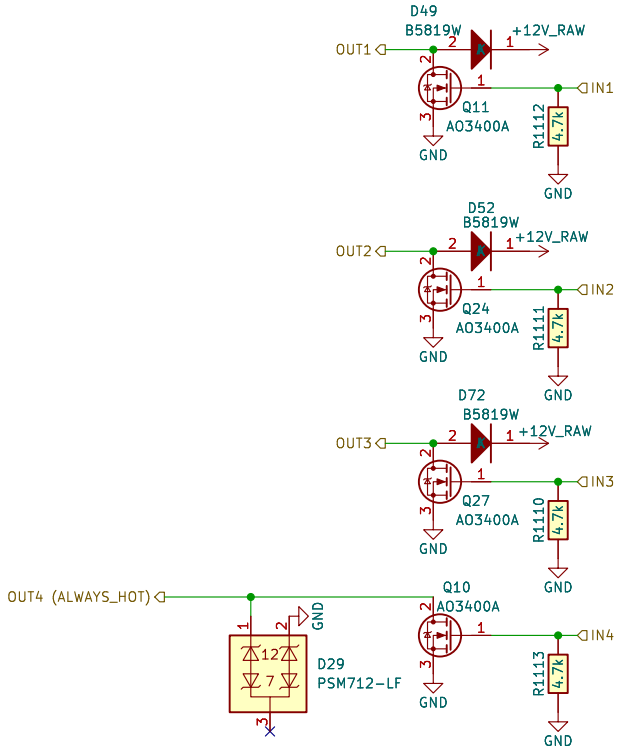

Sheet: /LS_weak/
File: LS_weak.kicad_sch

Title:

Size: A4	Date:	**Rev:**
KiCad E.D.A. 8.0.1		Id: 7/14

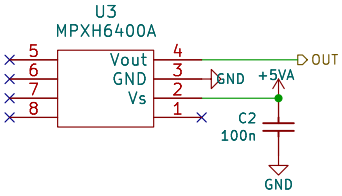

Sheet: /MAP/
File: MAP.kicad_sch

Title:

Size: A4	Date:	**Rev:**
KiCad E.D.A. 8.0.1		Id: 8/14

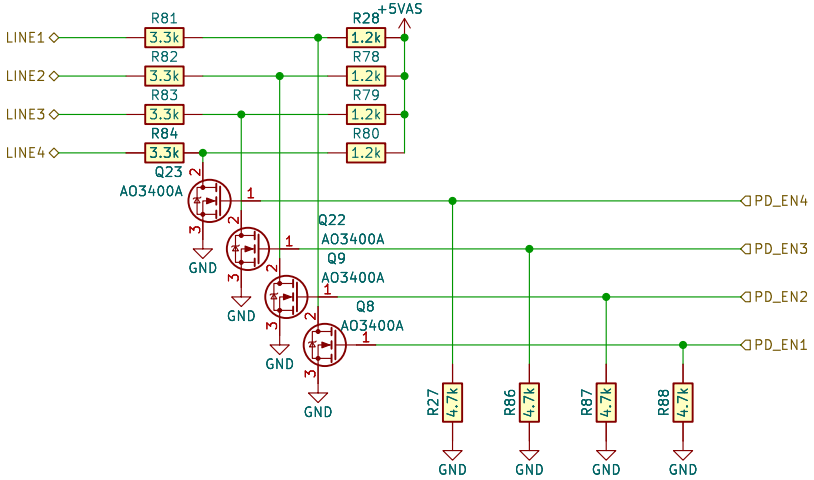

Sheet: /OPT_PULLDOWNS1/
File: PD4.kicad_sch

Title:

Size: A4	Date:	**Rev:**
KiCad E.D.A. 8.0.1		Id: 9/14

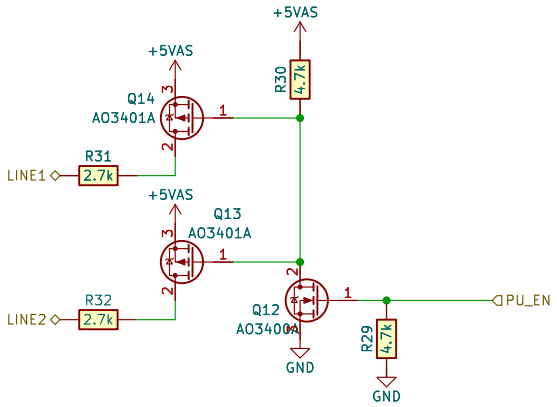

Sheet: /OPT_PULLUPS/
File: DOUBLE_PU.kicad_sch

Title:

Size: A4	Date:	Rev:
KiCad E.D.A. 8.0.1		Id: 11/14

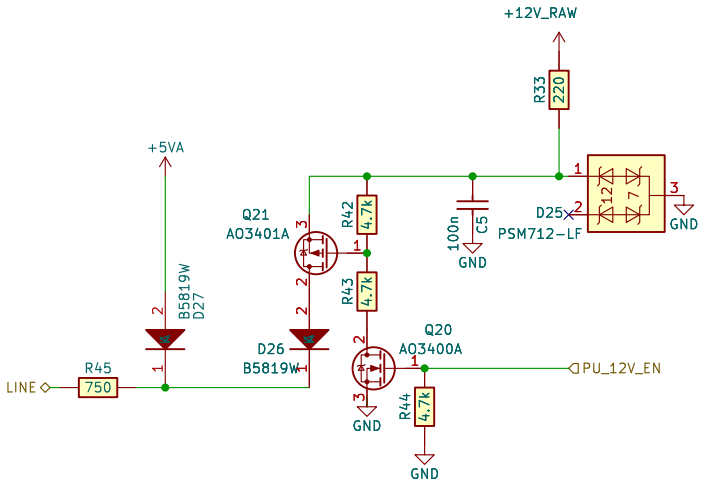

Sheet: /TACH_PULLUP/
File: TACH_PU.kicad_sch

Title:

Size: A4	Date:	Rev:
KiCad E.D.A. 8.0.1		Id: 12/14

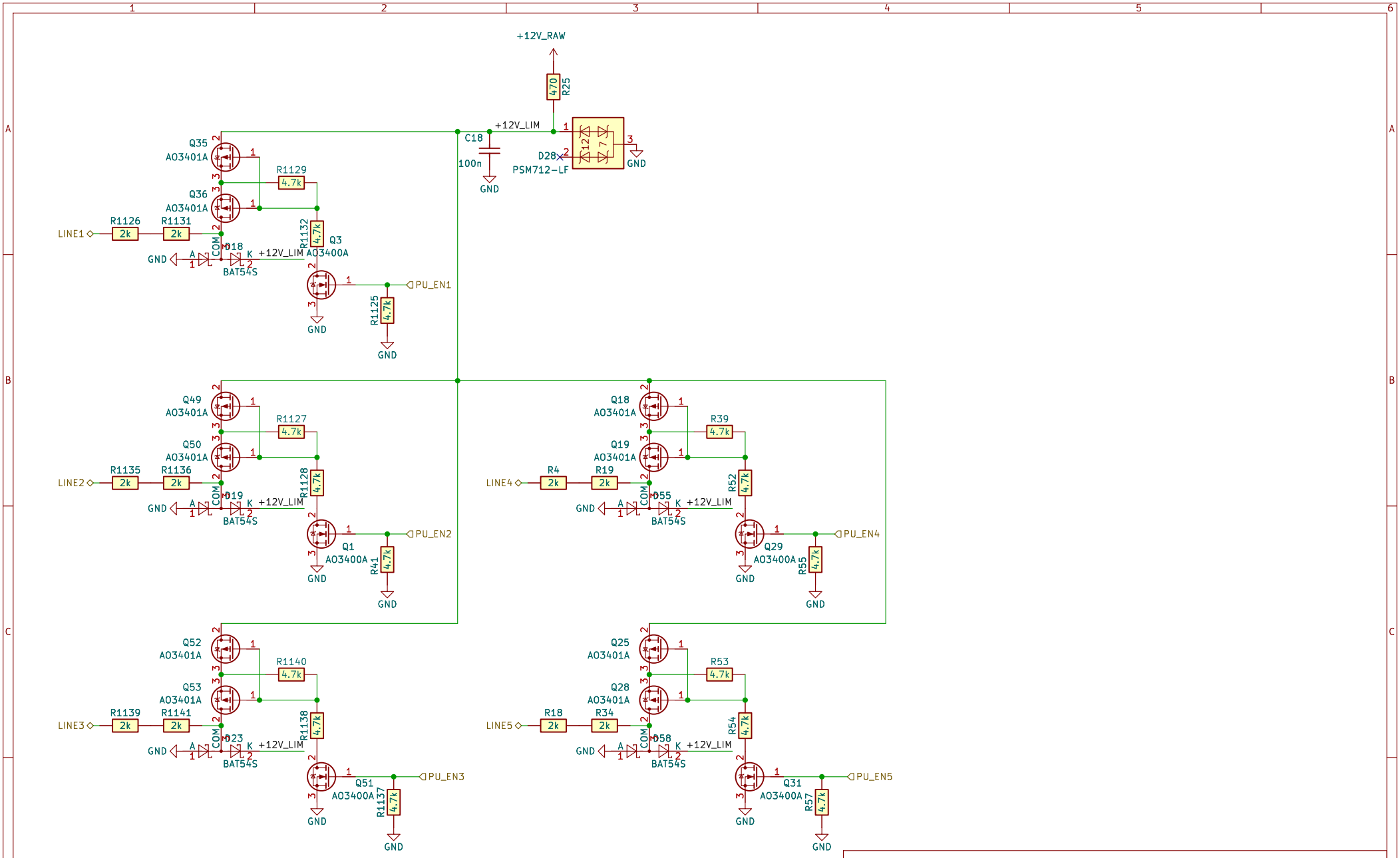

Sheet: /HALL_OPT_PU/
File: HALL_PU3.kicad_sch

Title:

Size: A4	Date:	Rev:
KiCad E.D.A. 8.0.1		Id: 13/14

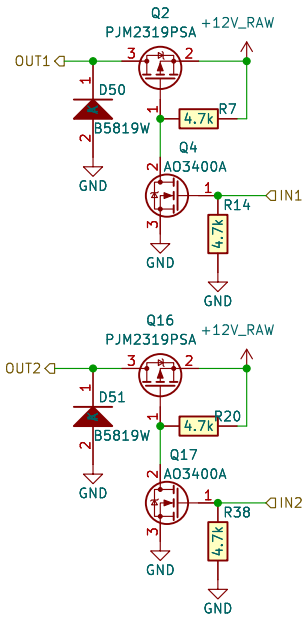

Sheet: /HS/
File: HS2.kicad_sch

Title:

Size: A4	Date:	**Rev:**
KiCad E.D.A. 8.0.1		Id: 14/14

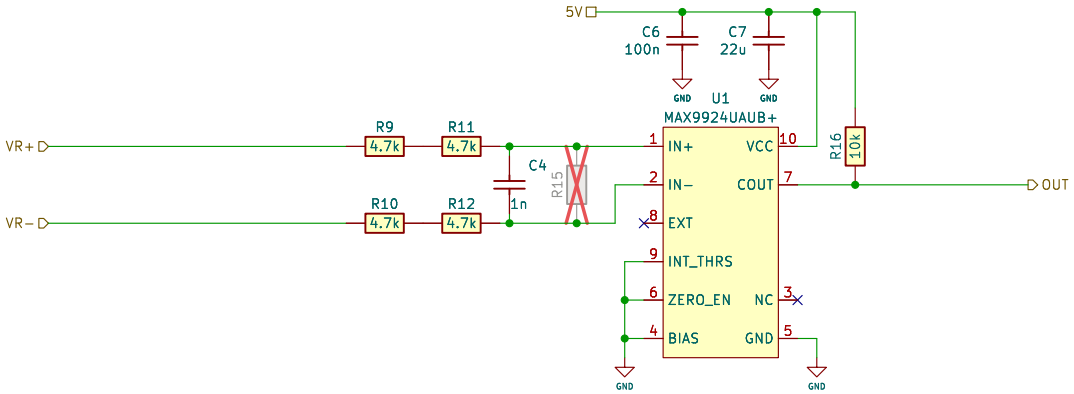

Sheet: /vr9924/
File: vr9924.kicad_sch

Title:

Size: A4	Date:	**Rev:**
KiCad E.D.A. 8.0.1		Id: 15/14