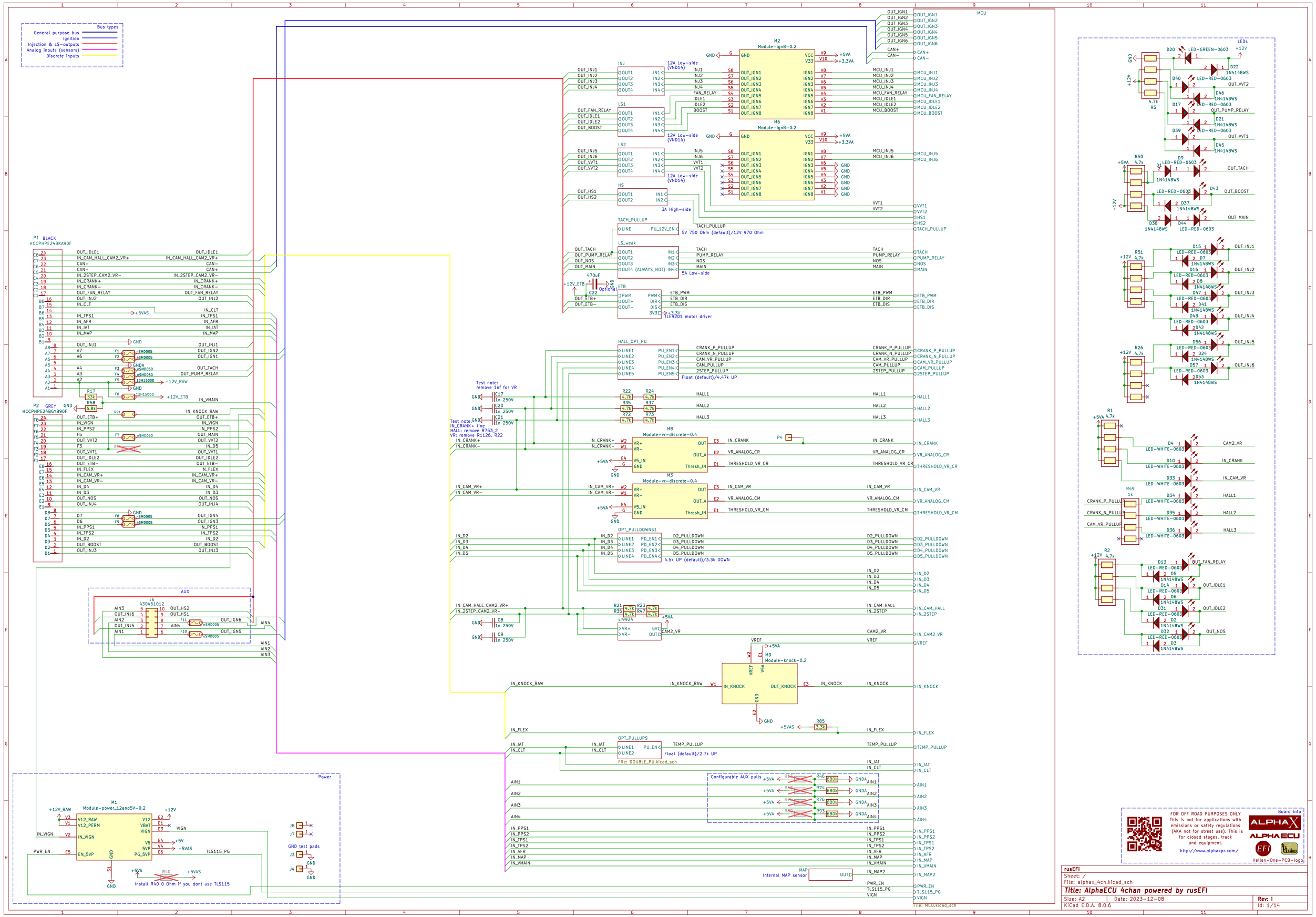
Bus types
General purpose bus
Ignition
Injection & LS-outputs
Analog inputs (sensors)
Discrete inputs
MCU
P1 BLACK
HCCPHPE24BKA90F
P2 GREY
HCCPHPE24BGYB90F
M2
Module-ignB-0.2
M6
Module-ignB-0.2
INJ
LS1
LS2
HS
TACH_PULLUP
LS_weak
ETB
TLE9201 motor driver
HALL_OPT_PU
M8
Module-vr-discrete-0.4
M3
Module-vr-discrete-0.4
OPT_PULLDOWNS1
4.5k UP (default)/3.3k DOWN
vr9924
M9
Module-knock-0.2
OPT_PULLUPS
Float (default)/2.7k UP
File: DOUBLE_PU.kicad_sch
Configurable AUX pulls
MAP
Internal MAP sensor
File: MCU.kicad_sch
AUX
J6
430451012
Power
M1
Module-power_12and5V-0.2
GND test pads
Install R40 0 Ohm if you dont use TLS115
LEDs
FOR OFF ROAD PURPOSES ONLY
This is not for applications with emissions or safety regulations (AKA not for street use). This is for closed stages, track and equipment.
http://www.alphaxpr.com/
Board info
Hellen-One-PCB-logo
rusEFI
Sheet: /
File: alphax_4ch.kicad_sch
Title: AlphaECU 4chan powered by rusEFI
Size: A2
Date: 2023-12-08
KiCad E.D.A. 8.0.6
Rev: 1
Id: 1/14

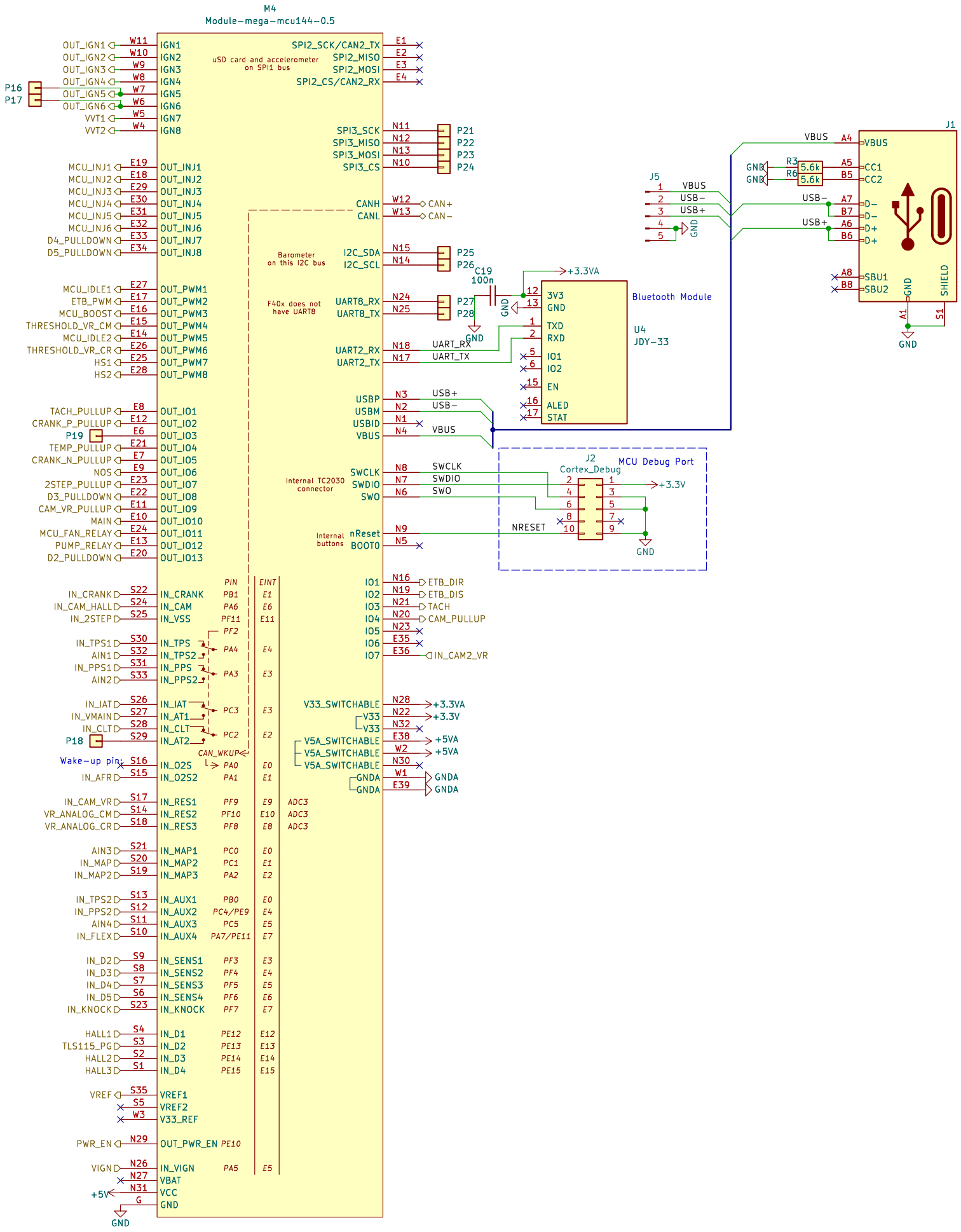
M4
Module-mega-mcu144-0.5
uSD card and accelerometer on SPI1 bus
Barometer on this I2C bus
F40x does not have UART8
Internal TC2030 connector
Internal buttons
Wake-up pin
Bluetooth Module
U4
JDY-33
J1
J5
J2
Cortex_Debug
MCU Debug Port
C19
100n
+3.3VA
+3.3V
+5VA
GND
GNDA
CAN+
CAN-
CAN_WKUP
OUT_INJ1
OUT_INJ2
OUT_INJ3
OUT_INJ4
OUT_INJ5
OUT_INJ6
OUT_INJ7
OUT_INJ8
OUT_PWM1
OUT_PWM2
OUT_PWM3
OUT_PWM4
OUT_PWM5
OUT_PWM6
OUT_PWM7
OUT_PWM8
OUT_IO1
OUT_IO2
OUT_IO3
OUT_IO4
OUT_IO5
OUT_IO6
OUT_IO7
OUT_IO8
OUT_IO9
OUT_IO10
OUT_IO11
OUT_IO12
OUT_IO13
IN_CRANK
IN_CAM
IN_VSS
IN_TPS
IN_TPS2
IN_PPS
IN_PPS2
IN_IAT
IN_AT1
IN_CLT
IN_AT2
IN_O2S
IN_O2S2
IN_RES1
IN_RES2
IN_RES3
IN_MAP1
IN_MAP2
IN_MAP3
IN_AUX1
IN_AUX2
IN_AUX3
IN_AUX4
IN_SENS1
IN_SENS2
IN_SENS3
IN_SENS4
IN_KNOCK
IN_D1
IN_D2
IN_D3
IN_D4
VREF1
VREF2
V33_REF
OUT_PWR_EN
IN_VIGN
VBAT
VCC
GND
SPI2_SCK/CAN2_TX
SPI2_MISO
SPI2_MOSI
SPI2_CS/CAN2_RX
SPI3_SCK
SPI3_MISO
SPI3_MOSI
SPI3_CS
CANH
CANL
I2C_SDA
I2C_SCL
UART8_RX
UART8_TX
UART2_RX
UART2_TX
USBP
USBM
USBID
VBUS
SWCLK
SWDIO
SWO
nReset
BOOT0
IO1
IO2
IO3
IO4
IO5
IO6
IO7
V33_SWITCHABLE
V5A_SWITCHABLE
3V3
TXD
RXD
EN
ALED
STAT
ETB_DIR
ETB_DIS
TACH
CAM_PULLUP
IN_CAM2_VR
NRESET
VBUS
CC1
CC2
D-
D+
SBU1
SBU2
SHIELD
5.6k
R3
R6
Sheet: /MCU/
File: MCU.kicad_sch
Title:
Size: A3
Date:
Rev:
KiCad E.D.A. 8.0.6
Id: 2/14

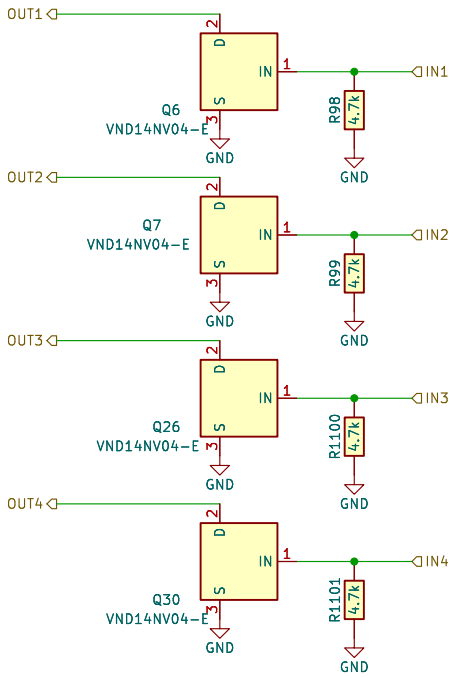

Sheet: /INJ/
File: INJ4.kicad_sch

Title:

Size: A4	Date:	Rev:
KiCad E.D.A. 8.0.6		Id: 3/14

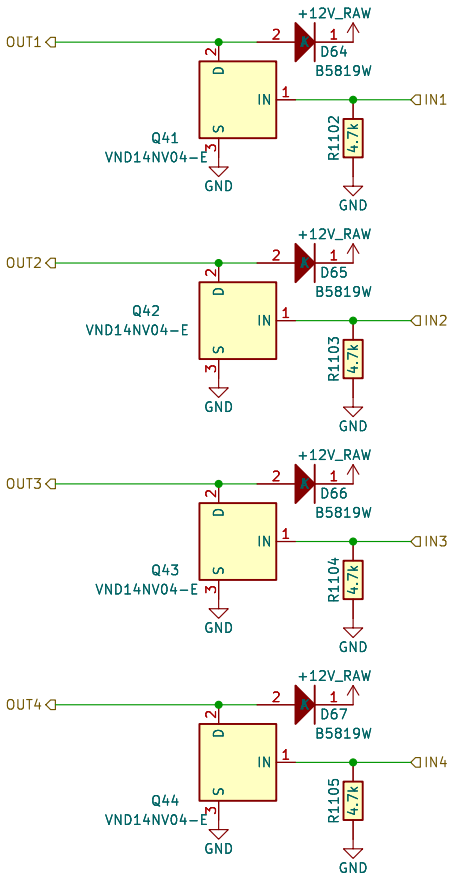

Sheet: /LS1/
File: LS4.kicad_sch

Title:

Size: A4	Date:	Rev:
KiCad E.D.A. 8.0.6		Id: 4/14

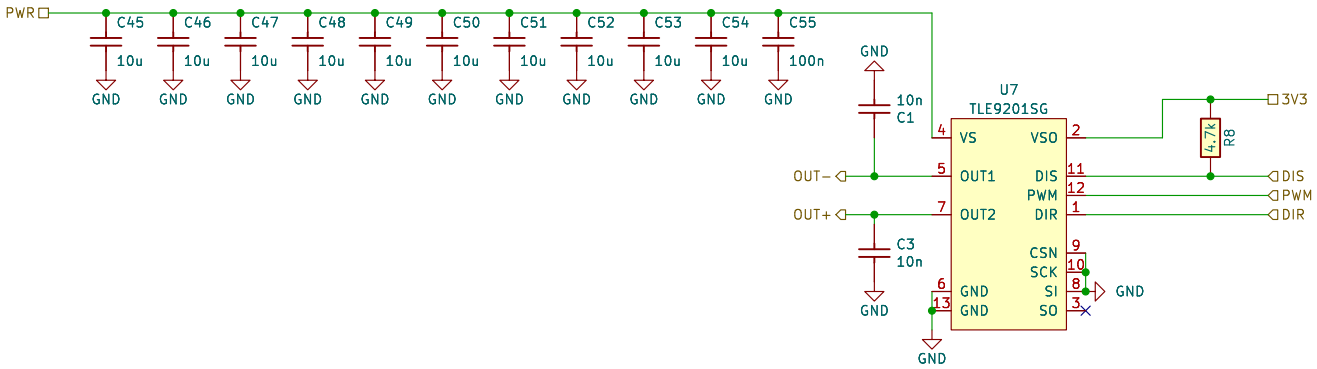

Sheet: /ETB/
File: DC_MOTOR_0.1.kicad_sch

Title: Hellen−One DC motor driver

Size: A4	Date: 2023−09−04	**Rev: 0.1**
KiCad E.D.A. 8.0.6		Id: 5/14

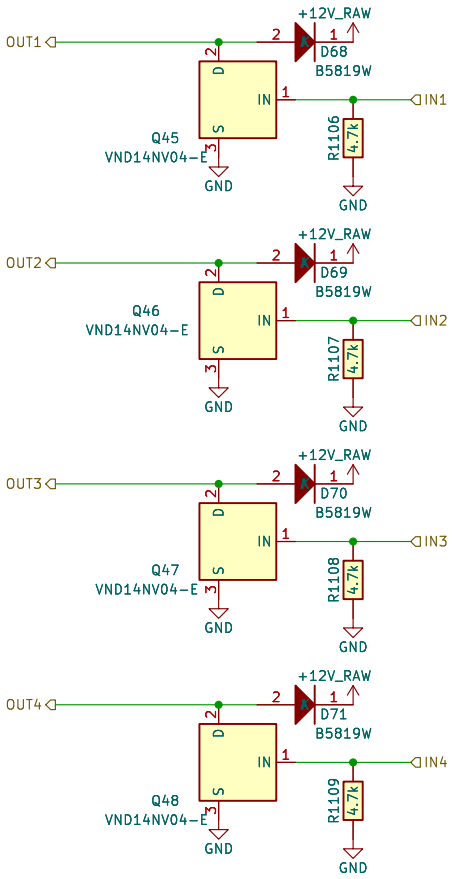

Sheet: /LS2/
File: LS4.kicad_sch

Title:

Size: A4	Date:	Rev:
KiCad E.D.A. 8.0.6		Id: 6/14

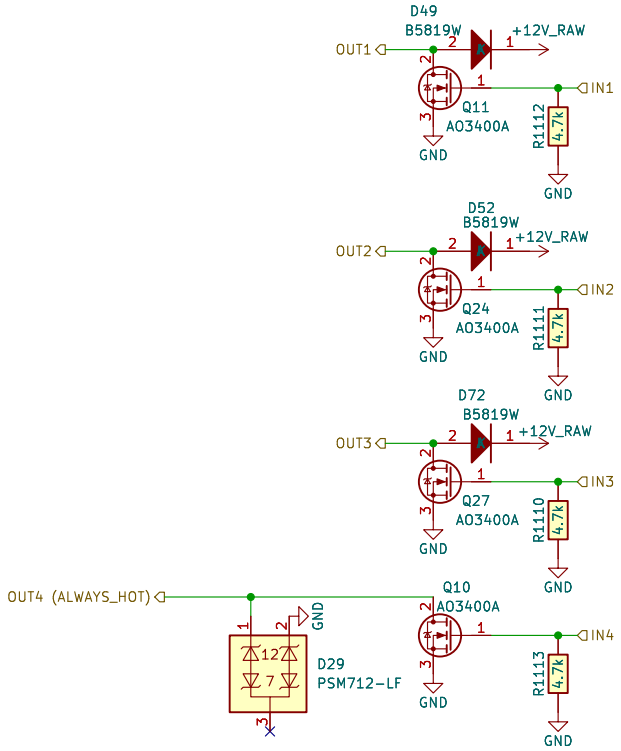

Sheet: /LS_weak/
File: LS_weak.kicad_sch

Title:

Size: A4	Date:	**Rev:**
KiCad E.D.A. 8.0.6		Id: 7/14

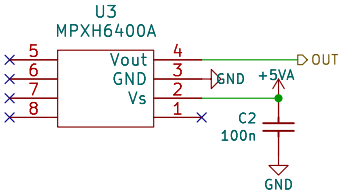

Sheet: /MAP/
File: MAP.kicad_sch

Title:

Size: A4	Date:	**Rev:**
KiCad E.D.A. 8.0.6		Id: 8/14

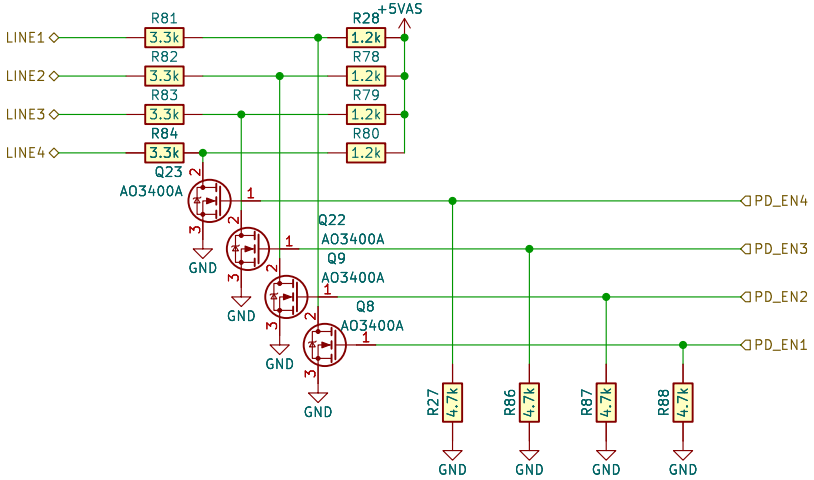

Sheet: /OPT_PULLDOWNS1/
File: PD4.kicad_sch

Title:

Size: A4	Date:	**Rev:**
KiCad E.D.A. 8.0.6		Id: 9/14

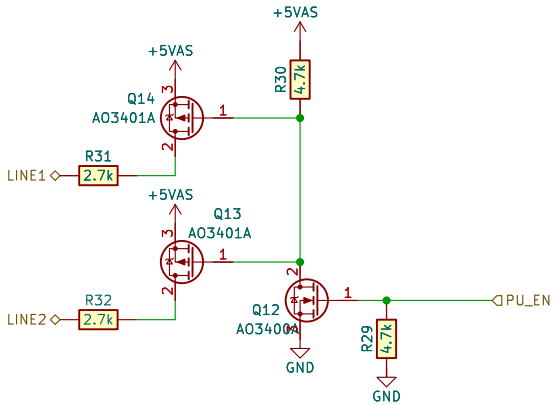

Sheet: /OPT_PULLUPS/
File: DOUBLE_PU.kicad_sch

Title:

Size: A4	Date:	Rev:
KiCad E.D.A. 8.0.6		Id: 11/14

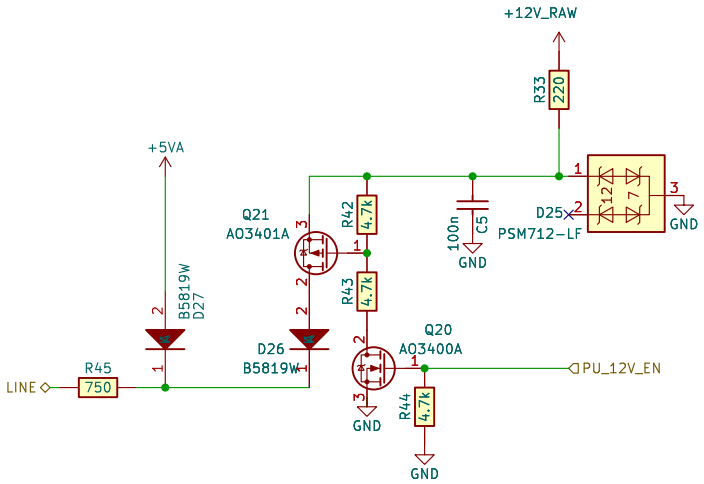

Sheet: /TACH_PULLUP/
File: TACH_PU.kicad_sch

Title:

Size: A4	Date:	Rev:
KiCad E.D.A. 8.0.6		Id: 12/14

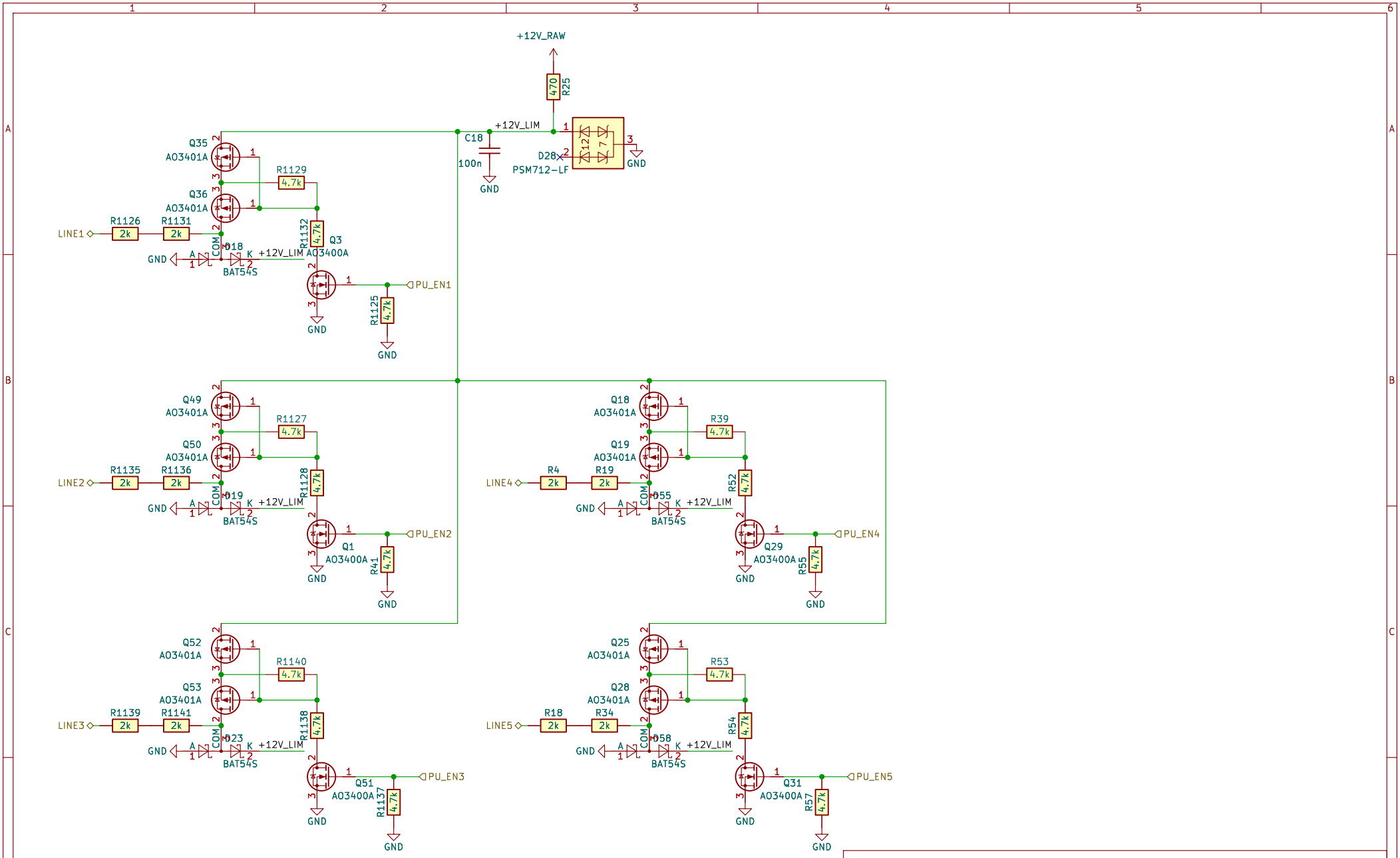

Sheet: /HALL_OPT_PU/
File: HALL_PU3.kicad_sch

Title:

Size: A4	Date:	Rev:
KiCad E.D.A. 8.0.6		Id: 13/14

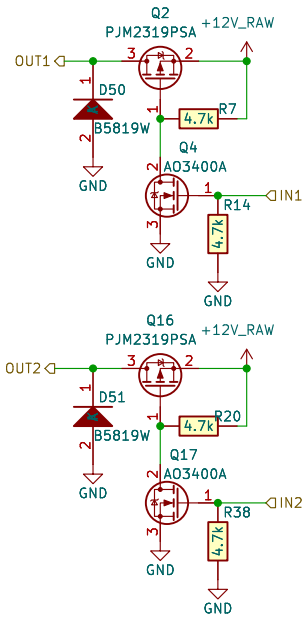

Sheet: /HS/
File: HS2.kicad_sch

Title:

Size: A4	Date:	Rev:
KiCad E.D.A. 8.0.6		Id: 14/14

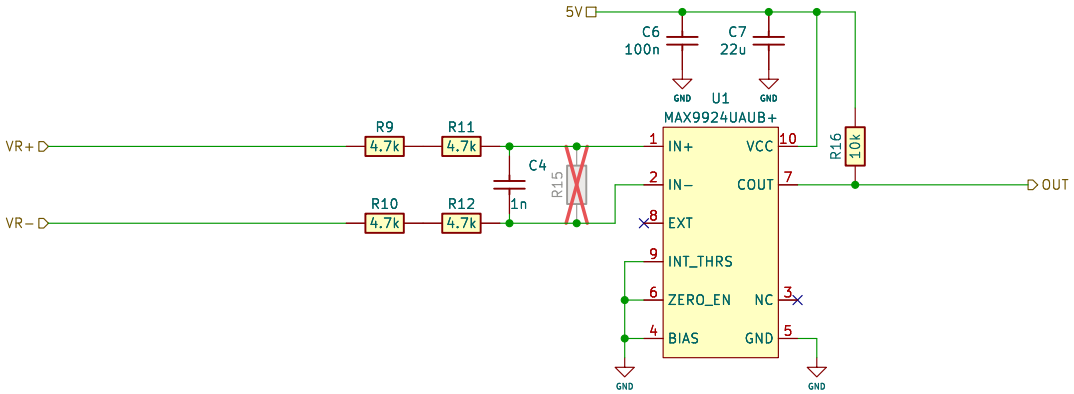

Sheet: /vr9924/
File: vr9924.kicad_sch

Title:

Size: A4	Date:	**Rev:**
KiCad E.D.A. 8.0.6		Id: 15/14