Fiber Collimator SMA905 Connector Fiber Focusing Lens 5 mm Lens Diameter

Fiber-optic Collimator

larger image

$84.00

Add to Cart: 1

Add to Cart

Fiber Collimator SMA905 Connector Fiber Focusing Lens 5 mm Lens Diameter

This product can be used for fiber collimation or for coupling focusing. The use of collimation, either single mode or multimode fiber can be used. If used as a coupling focus, it can only be used with multimode fiber (numerical aperture 0.22~0.37NA, core diameter ≥100μm).

[Features]

1. This collimator is used for SMA905 connector and Ø6.35 metal head fiber for easy focus adjustment. Consistent with Ocean's 74 Series lenses, it is compatible with other optical devices.
2. Wavelength: 200nm~2500nm quartz lens.
3. After the beam passes through the lens, the divergence angle is <2°.
4. Adjustable focal length(±5mm).
5. Easy use.

[Specifications]

Product Name: Fiber Collimator
Model: 74-UV
Connector: SMA905, TA connector (6.35mm diameter metal head), 3/8-24
External Thread: 3/8-24
Middle Hex Size: 12mm
Lens Diameter: 5 mm
Lens Focal Length: 10 mm
Wavelength Range: 200-2500 nm
Working Temperature: -40~150 °C

Explore our developer-friendly HTML to PDF API Printed using PDFCrowd HTML to PDF

Housing Material: aluminum, black.

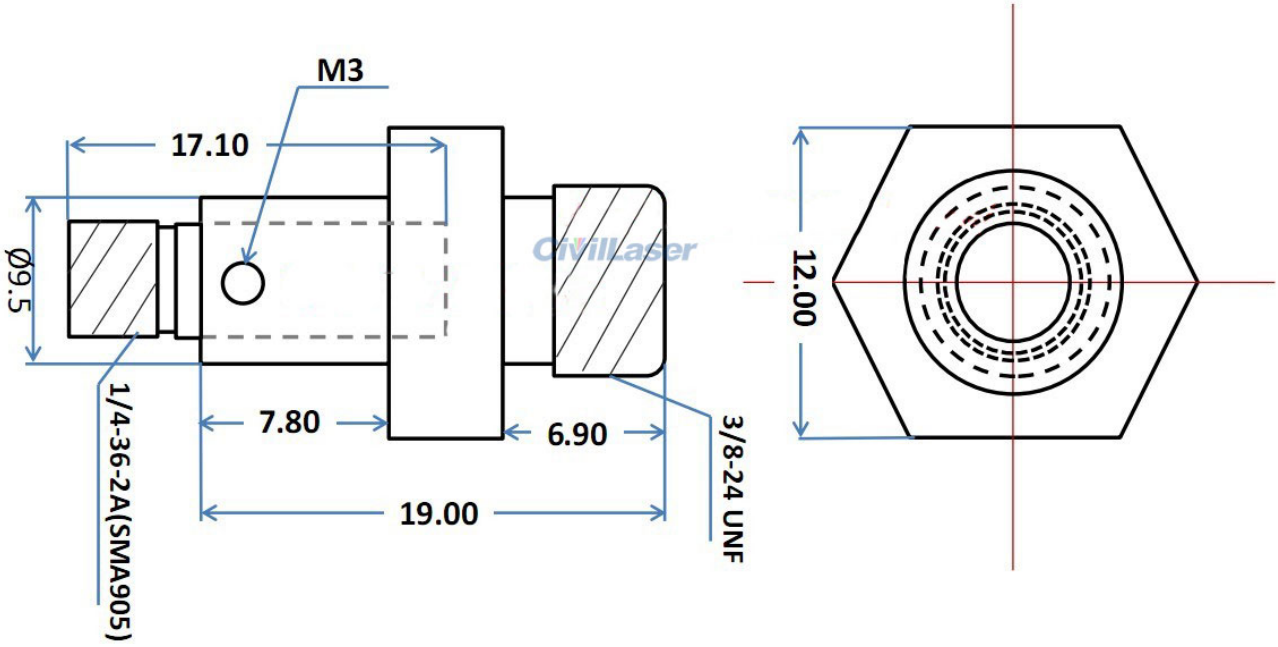

Explore our developer-friendly HTML to PDF API Printed using PDFCrowd HTML to PDF

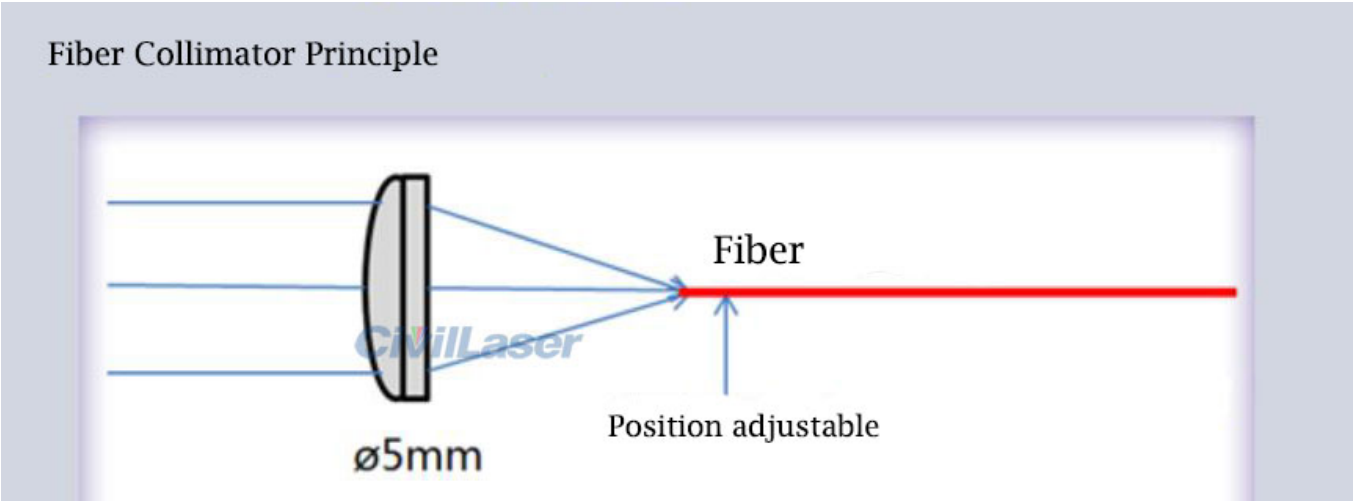

Write Review

Similar products

Collimating lens of optical fiber 94-UV Large diameter single lens

$363.00

200~2500nm Filter Retention Lens Φ14mm Collimator Coupling Loading Filter

$200.00

Fiber Collimator SMA905 Connector Fiber Focusing Lens 5 mm Lens Diameter

$84.00

200nm~2500nm Fiber Collimator Lens Diameter 5mm SMA905 FC/PC Fiber

$84.00

SMA905 Fiber Collimator Focus Adjustable Lens Diameter 25.4 mm

$315.00

360nm~1620nm Laser Fiber Coupling Collimator 10mm 20mm Lens FC/PC SMA Interface

$289.00

Fiber Focus Lens SMA905 Interface Fiber Collimator Lens

Fiber Collimator 185~2500nm Focusing Lens SMA905 Fiber

SMA905 Fiber Focusing Lens Fiber Collimator Focus Adjustable

Explore our developer-friendly HTML to PDF API Printed using PDFCrowd HTML to PDF

Diameter 10mm 25.4mm

$143.00

Coupling Lens

$96.00

Optical Lens

$118.00

Fiber Collimator Focus Lens Diameter 6mm FC/PC FC/APC Fiber

$194.00

Fiber Collimator Bracket Measuring Holder Adjustment Bracket/Support

$285.00

Fiber Collimator Diameter 10mm Fiber Optic Focusing Lens SMA905 Fiber

$127.00

Customers who bought this product also purchased...

Fiber Collimator Diameter 10mm Fiber Opt...

Fiber Focus Lens SMA905 Interface Fiber ...

Fiber Collimator 185~2500nm Focusing Len...

Laser special optical support three axis...

515nm 520nm 10mw-80mw Green Laser Module...

515nm 10mW 30mW Laser Module Dot Line Cr...

Collimating lens of optical fiber 94-UV ...

650nm 100mW Red Pigtailed Laser Multimod...

785nm 150mW Pigtailed Laser IR Fiber Cou...

Copyright © 2026 Civil Laser Supplier. NaKu Technology Co., Ltd . SiteMap

Explore our developer-friendly HTML to PDF API Printed using PDFCrowd HTML to PDF