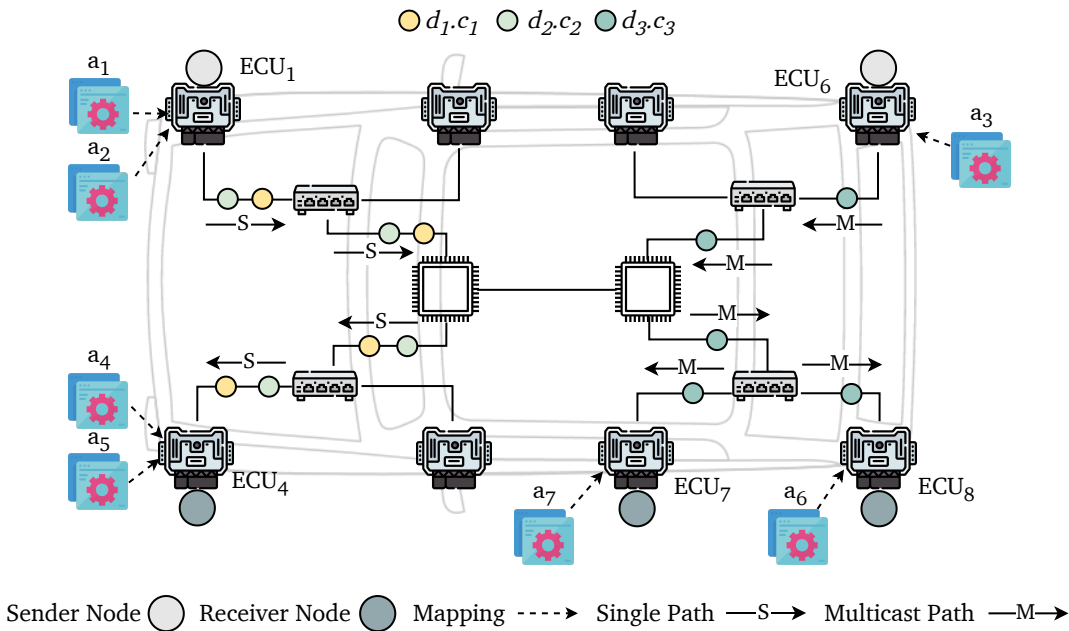
$d_1.c_1$
$d_2.c_2$
$d_3.c_3$
a_1
a_2
a_3
a_4
a_5
a_6
a_7
ECU_1
ECU_4
ECU_6
ECU_7
ECU_8
S
M
Sender Node
Receiver Node
Mapping
Single Path
Multicast Path