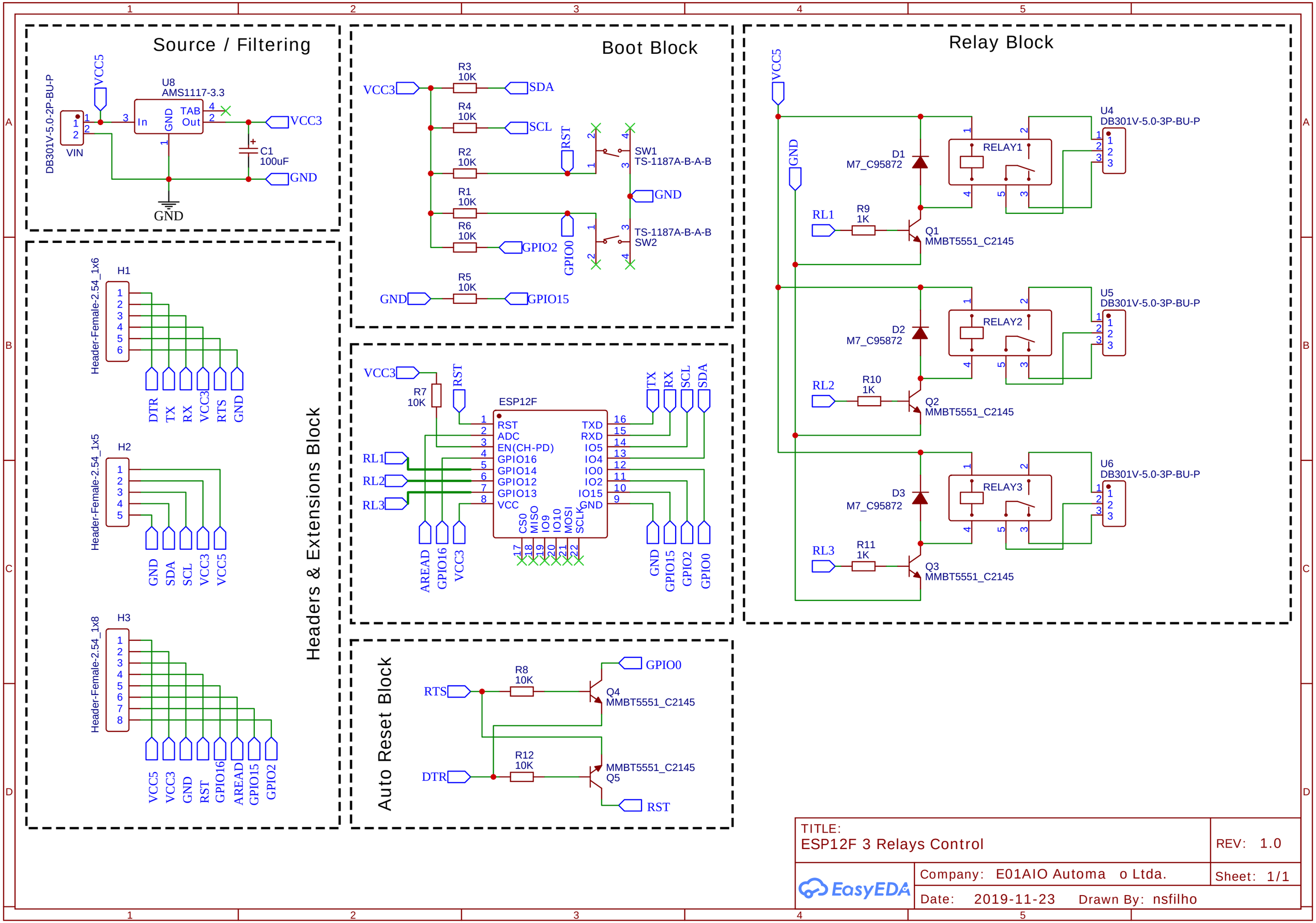

TITLE:
ESP12F 3 Relays Control

REV: 1.0

Company: E01AIO Automa o Ltda.

Sheet: 1/1

Date: 2019-11-23 Drawn By: nsfilho