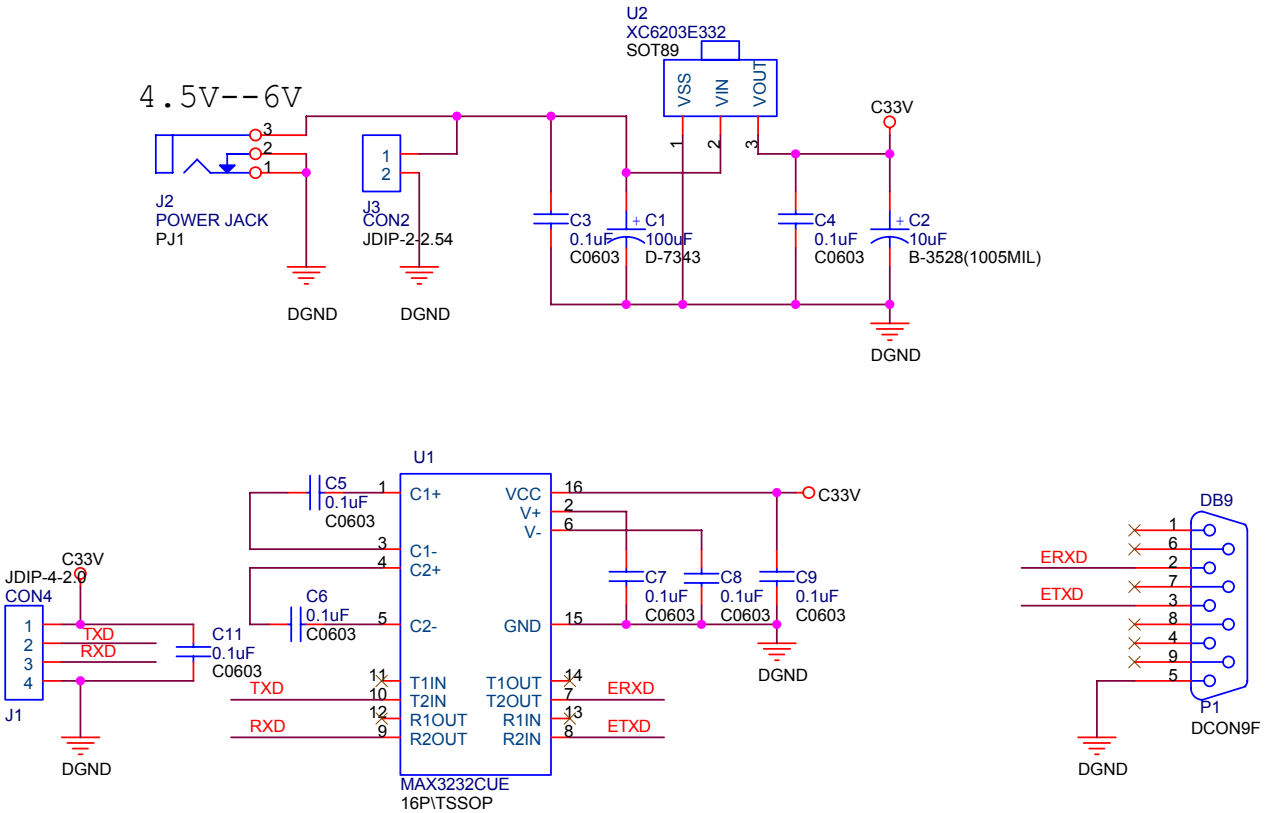


COMedia Ltd.
康大科技有限公司

| | | |
|---|---|---|
| Title | C328 EV BORAD | |
| Size A4 | Document Number EV328 | Rev R1.1 |
| Date: Monday, December 08, 2003 | Sheet 1 of 1 | |