Computer Organization and Architecture

Prof. Indranil Sengupta

Department of Computer Science and Engineering

IIT Kharagpur

MIPS32 Architecture: A Case Study

- As a case study, we shall be considering the MIPS32 architecture.
  - It belongs to the family of *Reduced Instruction Set Computer* (RISC).
  - Look into the *Instruction Set Architecture* (ISA) of MIPS32.
    - What CPU registers are available to the assembly language programmer?
    - What assembly language instructions are supported?
  - Required for the first set of experiments in the COA Laboratory.

MIPS32 CPU Registers

- The MIPS32 ISA has the following CPU registers that are visible to the machine/assembly language programmer.
  a) 32, 32-bit general purpose registers (GPRs), *R0* to *R31*.
  b) A special-purpose 32-bit program counter (*PC*).
     - Points to the next instruction in memory to be fetched and executed.
     - Not directly visible to the programmer.
     - Affected only indirectly by certain instructions (like branch, call, etc.)
  c) A pair of 32-bit special-purpose registers *HI* and *LO*, which are used to hold the results of multiply, divide, and multiply-accumulate instructions.

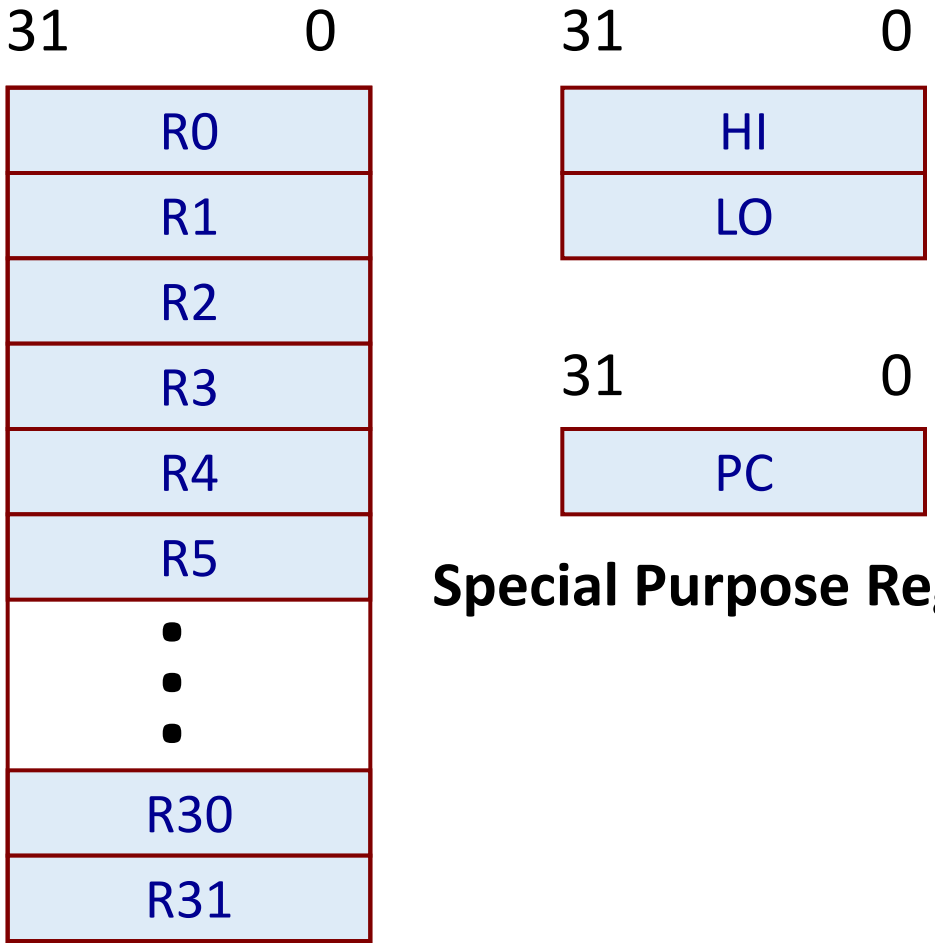

General Purpose Registers

Special Purpose Registers

Two of the GPRs have assigned functions:

a) R0 is hard-wired to a value of zero.
   - Can be used as a source when a zero value is needed.

b) R31 is used to store the return address when a function call is made.
   - Used by the jump-and-link and branch-and-link instructions like JAL, BLTZAL, BGEZAL, etc.
   - Can also be used as a normal register.

Some Examples

```
LD      R4, 50(R3)      // R4 = Mem[50+R3]
ADD     R2, R1, R4      // R2 = R1 + R4
SD      54(R3), R2      // Mem[54+R3] = R2
```

```
ADD   R2, R5, R0      // R2 = R5
```

```
MAIN:  ADDI   R1, R0, 35    // R1 = 35
       ADDI   R2, R0, 56    // R2 = 56
       JAL    GCD
       .....

GCD:   .....  // Find GCD of R1 & R2

       JR     R31
```

How are the HI and LO registers used?

- During a multiply operation, the *HI* and *LO* registers store the product of an integer multiply.
  - HI denotes the high-order 32 bits, and LO denotes the low-order 32 bits.
- During a multiply-add or multiply-subtract operation, the HI and LO registers store the result of the integer multiply-add or multiply-subtract.
- During a division, the *HI* and *LO* registers store the quotient (in LO) and remainder (in HI) of integer divide.

Some MIPS32 Assembly Language Conventions

- The integer registers of MIPS32 can be accessed as R0..R31 or r0..r31 in an assembly language program.
- Several assemblers and simulators are available in the public domain (like *QtSPIM*) that follow some specific conventions.
  - These conventions have become like a *de facto* standard when we write assembly language programs for MIPS32.
  - Basically some alternate names are used for the registers to indicate their intended usage.

Register name	Register number	Usage
$zero	R0	Constant zero

Used to represent the constant zero value, wherever required in a program.

Register name	Register number	Usage
$at	R1	Reserved for assembler

May be used as temporary register during macro expansion by assembler.

- Assembler provides an extension to the MIPS32 instruction set that are converted to standard MIPS32 instructions.

Example: Load Address instruction used to initialize pointers

```
la    R5,addr
```

```
lui   $at,Upper-16-bits-of-addr
ori   R5,$at,Lower-16-bits-of-addr
```

Register name	Register number	Usage
$v0	R2	Result of function, or for expression evaluation
$v1	R3	Result of function, or for expression evaluation

May be used for up to two function return values, and also as temporary registers during expression evaluation.

Register name	Register number	Usage
$a0	R4	Argument 1
$a1	R5	Argument 2
$a2	R6	Argument 3
$a3	R7	Argument 3

May be used to pass up to four arguments to functions.

Register name	Register number	Usage
$t0	R8	Temporary (not preserved across call)
$t1	R9	Temporary (not preserved across call)
$t2	R10	Temporary (not preserved across call)
$t3	R11	Temporary (not preserved across call)
$t4	R12	
$t5	R13	
$t6	R14	
$t7	R15	
$t8	R24	Temporary (not preserved across call)
$t9	R25	Temporary (not preserved across call)

May be used as temporary variables in programs.

These registers might get modified when some functions are called (other than user-written functions).

Register name	Register number	Usage
$s0	R16	Temporary (preserved across call)
$s1	R17	Temporary (preserved across call)
$s2	R18	Temporary (preserved across call)
$s3	R19	Temporary (preserved across call)
$s4	R20	Temporary (preserved across call)
$s5	R21	Temporary (preserved across call)
$s6	R22	
$s7	R23	

May be used as temporary variables in programs.

These registers do not get modified across function calls.

Register name	Register number	Usage
$gp	R28	Pointer to global area
$sp	R29	Stack pointer
$fp	R30	Frame pointer
$ra	R31	Return address (used by function call)

These registers are used for a variety of pointers:

- Global area: points to the memory address from where the global variables are allocated space.
- Stack pointer: points to the top of the stack in memory.
- Frame pointer: points to the activation record in stack.
- Return address: used while returning from a function.

Register name	Register number	Usage
$k0	R26	Reserved for OS kernel
$k1	R27	Reserved for OS kernel

These registers are supposed to be used by the OS kernel in a real computer system.

It is highly recommended not to use these registers.

MIPS32 INSTRUCTION SET

Instruction Set Classification

- MIPS32 instruction can be classified into the following functional groups:
  a) Load and Store
  b) Arithmetic and Logical
  c) Jump and Branch
  d) Miscellaneous
  e) Coprocessor instruction (to activate an auxiliary processor).
- All instructions are encoded in 32 bits.

Alignment of Words in Memory

- MIPS requires that all words must be aligned in memory to word boundaries.
  - Must start from an address that is some power of 4.
  - Last two bits of the address must be 00.
- Allows a word to be fetched in a single cycle.
  - Misaligned words may require two cycles.

Address				
0000H	w1	w1	w1	w1
0004H		w2	w2	w2
0008H	w2			
000CH			w3	w3
0010H	w3	w3		
0014H				w4
0018H	w4	w4	w4	

w1 is aligned, but w2, w3, w4 are not

(a) Load and Store Instructions

- MIPS32 is a load-store architecture.
  - All operations are performed on operands held in processor registers.
  - Main memory is accessed only through *LOAD* and *STORE* instructions.
- There are various types of LOAD and STORE instructions, each used for a particular purpose.

  a) By specifying the size of the operand (W: word, H: half-word, B: byte)
     - Examples: LW, LH, LB, SW, SW, SB

  b) By specifying whether the operand is signed (by default) or unsigned.
     - Examples: LHU, LBU

c) Accessing fields that are not word aligned.

- Examples: LWL, LWR, SWL, SWR

d) Atomic memory update for read-modify-write instructions

- Examples: LL, SC

Data sizes that can be accessed through LOAD and STORE

Data Size	Load Signed	Load Unsigned	Store
Byte	YES	YES	YES
Half-word	YES	YES	YES
Word	YES	Only for MIPS64	YES
Unaligned word	YES		YES
Linked word (atomic modify)	YES		YES

Type	Mnemonic	Function
Aligned	LB	Load Byte
	LBU	Load Byte Unsigned
	LH	Load Half-word
	LHU	Load Half-word Unsigned
	LW	Load Word
	SB	Store Byte
	SH	Store Half-word
	SW	Store Word

Type	Mnemonic	Function
Unaligned	LWL	Load Word Left
	LWR	Load Word Right
	SWL	Store Word Left
	SWR	Store Word Right
Atomic Update	LL	Load Linked Word
	SB	Store Conditional Word

(b) Arithmetic and Logic Instructions

- All arithmetic and logic instructions operate on registers.
- Can be broadly classified into the following categories:
  - ALU immediate
  - ALU 3-operand
  - ALU 2-operand
  - Shift
  - Multiply and Divide

Type	Mnemonic	Function
16-bit Immediate Operand	ADDI	Add Immediate Word
	ADDIU	Add Immediate Unsigned Word
	ANDI	AND Immediate
	LUI	Load Upper Immediate
	ORI	OR Immediate
	SLTI	Set on Less Than Immediate
	SLTIU	Set on Less Than Immediate Unsigned
	XORI	Exclusive-OR Immediate

Type	Mnemonic	Function
3-Operand	ADD	Add Word
	ADDU	Add Unsigned Word
	AND	Logical AND
	NOR	Logical NOR
	SLT	Set on Less Than
	SLTU	Set on Less Than Unsigned
	SUB	Subtract Word
	SUBU	Subtract Unsigned Word
	XOR	Logical XOR

Type	Mnemonic	Function
Shift	ROTR	Rotate Word Right
	ROTRV	Rotate Word Right Value (Register)
	SLL	Shift Word Left Logical
	SLLV	Shift Word Left Logical Value (Register)
	SRA	Shift Word Right Arithmetic
	SRAV	Shift Word Right Arithmetic Value (Register)
	SRL	Shift Word Right Logical
	SRLV	Shift Word Right Logical Value (Register)

(c) Multiply and Divide Instructions

- The multiply and divide instructions produce twice as many result bits.
  - When two 32-bit numbers are multiplied, we get a 64-bit product.
  - After division, we get a 32-bit quotient and a 32-bit remainder.
- Results are produced in the HI and LO register pair.
  - For multiplication, the low half of the product is loaded into LO, while the higher half in HI.
  - Multiply-Add and Multiply-Subtract produce a 64-bit product, and adds or subtracts the product from the concatenated value of HI and LO.
  - Divide produces a quotient that is loaded into LO and a remainder that is loaded into HI.

- Only exception is the MUL instruction, which delivers the lower half of the result directly to a GPR.
  - Useful is situations where the product is expected to fit in 32 bits.

Type	Mnemonic	Function
Multiply and Divide	DIV	Divide Word
	DIVU	Divide Unsigned Word
	MADD	Multiply and Add Word
	MADDU	Multiply and Add Word Unsigned
	MFHI	Move from HI
	MFLO	Move from LO
	MSUB	Multiply and Subtract Word
	MSUBU	Multiply and Subtract Word Unsigned
	MTHI	Move to HI
	MTLO	Move to LO
	MUL	Multiply Word to Register
	MULT	Multiply Word
	MULTU	Multiply Unsigned Word

(d) Jump and Branch Instructions

- The following types of Jump and Branch instructions are supported by MIPS32.
  - PC relative conditional branch
    - A 16-bit offset is added to PC.
  - PC-relative unconditional jump
    - A 28-bit offset if added to PC.
  - Absolute (register) unconditional jump
  - Special Jump instructions that link the return address in R31.

Type	Mnemonic	Function
Unconditional Jump within a 256 MB Region	J	Jump
	JAL	Jump and Link
	JALX	Jump and Link Exchange

Type	Mnemonic	Function
Unconditional Jump using Absolute Address	JALR	Jump and Link Register
	JR	Jump Register

Type	Mnemonic	Function
PC-Relative Conditional Branch Comparing Two Registers	BEQ	Branch on Equal
	BNE	Branch on Not Equal

Type	Mnemonic	Function
PC-Relative Conditional Branch Comparing With Zero	BGEZ	Branch on Greater Than or Equal to Zero
	BGEZAL	Branch on Greater Than or Equal to Zero and Link
	BGTZ	Branch on Greater than Zero
	BLEZ	Branch on Less Than or Equal to Zero

(e) Miscellaneous Instructions

- These instructions are used for various specific machine control purposes.
- They include:
  - Exception instructions
  - Conditional MOVE instructions
  - Prefetch instructions
  - NOP instructions

Type	Mnemonic	Function
System Call and Breakpoint	BREAK	
	SYSCALL	

Type	Mnemonic	Function
Trap-on-Condition Comparing Two Registers	TEQ	
	TGE	
	TGEU	
	TLT	Trap if Less Than
	TLTU	Trap if Less Than Unsigned
	TNE	Trap if Not Equal

Type	Mnemonic	Function
Trap-on-Condition Comparing an Immediate Value	TEQI	Trap if Equal Immediate
	TGEI	Trap if Greater Than or Equal Immediate
	TGEIU	Trap if Greater Than or Equal Immediate Unsigned
	TLTI	Trap if Less Than Immediate
	TLTIU	Trap if Less Than Immediate Unsigned
	TNEI	Trap if Not Equal Immediate

Type	Mnemonic	Function
Conditional Move	MOVF	Move Conditional on Floating Point False
	MOVN	Move Conditional on Not Zero
	MOVT	Move Conditional on Floating Point True
	MOVZ	Move Conditional on Zero

Type	Mnemonic	Function
Prefetch	PREF	Prefetch Register+Offset
NOP	NOP	No Operation

(e) Coprocessor Instructions

- The MIPS architecture defines four coprocessors (designated CP0, CP1, CP2, and CP3).
  - Coprocessor 0 (CP0) is incorporated on the CPU chip and supports the virtual memory system and exception handling. CP0 is also referred to as the System Control Coprocessor.
  - Coprocessor 1 (CP1) is reserved for the floating point coprocessor.
  - Coprocessor 2 (CP2) is available for specific implementations.
  - Coprocessor 3 (CP3) is available for future extensions.
- These instructions are not discussed here.

- MIPS32 architecture also supports a set of floating-point registers and floating-point instructions.
  - Shall be discussed later.

MIPS PROGRAMMING EXAMPLES

Some Examples of MIPS32 Arithmetic

C Code

```
A = B + C;
```

MIPS32 Code

```
add     $s1, $s2, $s3
```

B loaded in $s2
C loaded in $s3
A ← $s1

C Code

```
A = B + C – D;
E = F + A;
```

MIPS32 Code

```
add     $t0, $s1, $s2
sub     $s0, $t0, $s3
add     $s4, $s5, $s0;
```

B loaded in $s1
C loaded in $s2
D loaded in $s3
F loaded in $s5
$t0 is a temporary
A ← $s0; E ← $s4

Example on LOAD and STORE

C Code

```
A[10] = X – A[12];
```

MIPS32 Code

```
lw      $t0, 48($s3)
sub     $t0, $s2, $t0
sw      $t0, 40($s3);
```

$s3 contains the starting address of the array A

$s2 loaded with X

$t0 is a temporary

Address of A[10] will be $s3+40 (4 bytes per element)

Address of A[12] will be $s3+48

Examples on Control Constructs

C Code

```
if (x==y)  z = x – y;
```

MIPS32 Code

```
        bne     $s0, $s1, Label
        sub     $s3, $s0, $s1
Label:  ......
```

$s0 loaded with x

$s1 loaded with y

z ← $s3

C Code

```
if (x != y)  z = x – y;
else         z = x + y;
```

MIPS32 Code

```
        beq     $s0, $s1, Lab1
        sub     $s3, $s0, $s1
        j       Lab2
Lab1:   add     $s3, $s0, $s1
Lab2:   ....
```

$s0 loaded with x

$s1 loaded with y

z ← $s3

- MIPS32 supports a limited set of conditional branch instructions:

```
beq   $s2,Label        // Branch to Label of $s2 = 0
bne   $s2,Label        // Branch to Label of $s2 != 0
```

- Suppose we need to implement a conditional branch after comparing two registers for less-than or greater than.

C Code

```
if (x < y)    z = x – y;
else          z = x + y;
```

MIPS32 Code

```
        slt     $t0,$s0,$s1
        beq     $t0, $zero, Lab1
        sub     $s3, $s0, $s1
        j       Lab2
Lab1:   add     $s3, $s0, $s1
Lab2:   ....
```

Set if less than.
If $s0 < $s1, then set $t0=1; else $t0=0.

- MIPS32 assemblers supports several pseudo-instructions that are meant for user convenience.
  - Internally the assembler converts them to valid MIPS32 instructions.
- Example: The pseudo-instruction branch if less than

blt $s1, $s2, Label

MIPS32 Code

```
        slt     $at, $s1, $s2
        bne     $t0, $zero, Label
        ....
Label:  ....
```

The assembler requires an extra register to do this.

The register $at (= R1) is reserved for this purpose.

Working with Immediate Values in Registers

- **<u>Case 1</u>**: Small constants, which can be specified in 16 bits.
  - Occurs most frequently (about 90% of the time).
  - Examples:

A = A + 16;	→	addi	$s1, $s1, 16	(A in $s1)
X = Y – 1025;	→	subi	$s1, $s2, 1025	(X in $s1, Y in $s2)
A = 100;	→	addi	$s1, $zero, 100	(A in $s1)

- **<u>Case 2</u>**: Large constants, that require 32 bits to represent.
  - How to load a large constant in a register?
  - Requires two instructions.
    - A "*Load Upper Immediate*" instruction, that loads a 16-bit number into the upper half of a register (lower bits filled with zeros).
    - An "*OR Immediate*" instruction, to insert the lower 16-bits.
  - Suppose we want to load 0xAAAA3333 into a register $s1.

```
lui    $s1, 0xAAAA
ori    $s1, $s1, 0x3333
```

1010101010101010	0000000000000000
1010101010101010	0011001100110011

Other MIPS Pseudo-instructions

Pseudo-Instruction	Translates to	Function
blt $1, $2, Label	slt $at, $1, $2 bne $at, $zero, Label	Branch if less than
bgt $1, $2, Label	sgt $at, $1, $2 bne $at, $zero, Label	Branch if greater than
ble $1, $2, Label	sle $at, $1, $2 bne $at, $zero, Label	Branch if less or equal
bge $1, $2, Label	sge $at, $1, $2 bne $at, $zero, Label	Branch if greater or equal
li $1, 0x23ABCD	lui $1, 0x0023 ori $1, $1, 0xABCD	Load immediate value into a register

Pseudo-Instruction	Translates to	Function
move $1, $2	add $1, $2, $zero	Move content of one register to another
la $a0, 0x2B09D5	lui $a0, 0x002B ori $a0, $a0, l0x09D5	Load address into a register

A Simple Function

C Function

```
swap (int A[], int k)
{
   int  temp;
   temp = A[k];
   A[k] = A[k+1];
   A[k+1] = temp;
}
```

MIPS32 Code

```
swap:  muli   $t0, $s0, 4
       add    $t0, $s1, $t0
       lw     $t1, 0($t0)
       lw     $t2, 4($t0)
       sw     $t2, 0($t0)
       sw     $t1, 4($t0)
       jr     $ra
```

$s0 loaded with index k

$s1 loaded with base address of A

Address of A[k] = $s1 + 4 * $s0

Exchange A[k] and A[k+1]

SPIM System Calls

```
li      $v0,1           # print an integer in $a0
li      $a0,100
syscall

li      $v0,5           # read an integer into $v0
syscall

li      $v0,11          # print a character in $a0
li      $a0,'a'
syscall

li      $v0,12          # read a character into $v0
syscall

li      $v0,4           # print an ASCIIZ string at $a0
la      $a0,msg_hello
syscall
```

A complete program (check for perfect number)

```
## Takes in a positive integer - num and prints out if the number is perfect(or not)
## Registers Used :
##                    $t0 for storing num
##                    $t1 for storing k
##                    $t2 for storing sum
##                    $t3 for storing num % k

.text

main:
        la      $a0 , num_msg       # loads address of entering number msg in $a0
        li      $v0 , 4             # loads print string syscall command
        syscall                     # makes a system call

        li      $v0 , 5             # loads read int syscall command
        syscall                     # makes a system call
        move    $t0 , $v0           # store the value in $t0

        li      $t1 , 1             # initialize k with 1
        li      $t2 , 0             # initialize sum with 0

loop:
        bge     $t1 , $t0 , endloop # if k >= num then we are done
        rem     $t3 , $t0 , $t1     # load the remainder , num % k into $t3
        beqz    $t3 , adder         # branch to adder
```

```
loop1:
        add     $t1 , $t1 , 1           # increment the value of k by 1, i.e k++
        b       loop                    # unconditional branching to loop

adder:
        add     $t2 , $t2 , $t1         # add the value of k to the sum
        b       loop1                   # unconditional branching to lab

endloop:
        beq     $t2 , $t0 , perfect     # after the loop, if the value of sum = number entered, the number is a perfect number
        bne     $t2 , $t0 , notperfect  # if the value of sum is not equal to the number , the number is not a perfect number

perfect:
        la      $a0 , success_msg       # loads address of success msg in $a0
        li      $v0 , 4                 # loads print string syscall command
        syscall                         # makes a system call
        b       exit                    # unconditional branching to exit label

notperfect:
        la      $a0 , failure_msg       # loads address of failure msg in $a0
        li      $v0 , 4                 # loads print string syscall command
        syscall                         # makes a system call
        b       exit                    # unconditional branching to exit label

exit:                                   #### exit the program ####
        li      $v0 , 10                # load exit command into $v0
        syscall                         # makes a system call

.data                                   #####  data for storing strings ######
num_msg:      .asciiz "Enter a positive Integer\n"
success_msg:  .asciiz "Entered number is a perfect number\n"
failure_msg:  .asciiz "Entered number is not a perfect number\n"
```