eclipse CON 2004

Using Eclipse CDT for C/C++ Development

Sebastien Marineau-Mes

Feb. 4, 2004

Outline

- Who we are
- CDT project: goals and challenges
- CDT architecture
- Feature set
- Roadmap
- Example integrations

CDT – A Bit of History

- CDT – C Development Tooling
- Project launched July 2002
  - Provide C/C++ development under Eclipse
  - Integrate with existing C/C++ command-line tools (compiler, debug etc)
  - Built as extensible and replaceable building blocks
- Milestones
  - CDT 1.0 Dec. 2002
  - CDT 1.1 (May)
  - CDT 1.2 (Oct)
  - CDT 2.0 planned for June 2004 (sync with Eclipse 3.0)
- CDT commiters
  - QNX and IBM Rational
  - 20+ person-years of effort

Where We Are Today

- Downloads
  - Enthusiasts
  - Mostly Windows and Linux
- Adoption in commercial products
  - QNX Momentics development suite
  - IBM WSDD
  - Timesys Timestorm
  - Tensilica Xtensa Xplorer
  - Redhat Entreprise Linux
  - Montavista DevRocket
- IDE prototypes
  - Altera
  - PalmSource
  - Intel
  - Rockwell Collins
- Participating companies
  - TimeSys
  - Tensilica
  - Red Hat
  - Montavista
  - Intel
  - Rockwell Collins
  - Real-time Innovations
  - Altera
  - PalmSource
  - Ericksson
  - Nortel
  - Wind River
  - others…

CDT Project Goals

- First-class framework for C/C++ tooling in Eclipse
  - Platform-neutral framework to support variety of development scenarios
  - As full-featured as the JDT (!)
- Extensible and interoperable
  - Provide powerful base functionality and allow extending/replacing features
  - Well-defined APIs for interoperable extensibility
  - CDT common integration point for all C/C++ tooling
- Cooperative
  - Pooling of resources for base C/C++ tools components
  - Well-defined “value-add” from contributing companies

Where CDT is Being Targeted

- Traditional embedded
  - C/C++ development in host-target paradigm
  - CDT as integration point of embedded tooling
- Desktop/server
  - Linux-based self-hosted systems (non-Windows)
  - Opportunity for full-featured C/C++ IDE
- Deeply embedded
  - SW/HW co-design, soft cores, FPGA
  - Interest in C, assembly; very simulator-centric

Targeted environments drive default toolchain decisions

- Default CDT implementations target GNU
- gcc most widely used for build/compile
- gdb debugger widely available
- Provide additional integration hooks for other toolchains

Specific C/C++ IDE Challenges

- No “control” over back-end tools
  - Compiler, debugger, toolchains, build system
- C/C++ language challenges
  - Parsing challenges
  - Language variants
  - Complexity of C++
- Preprocessor
  - #defines can be in source, headers, or “inside” build system
  - Needed to properly parse source

General CDT Architecture

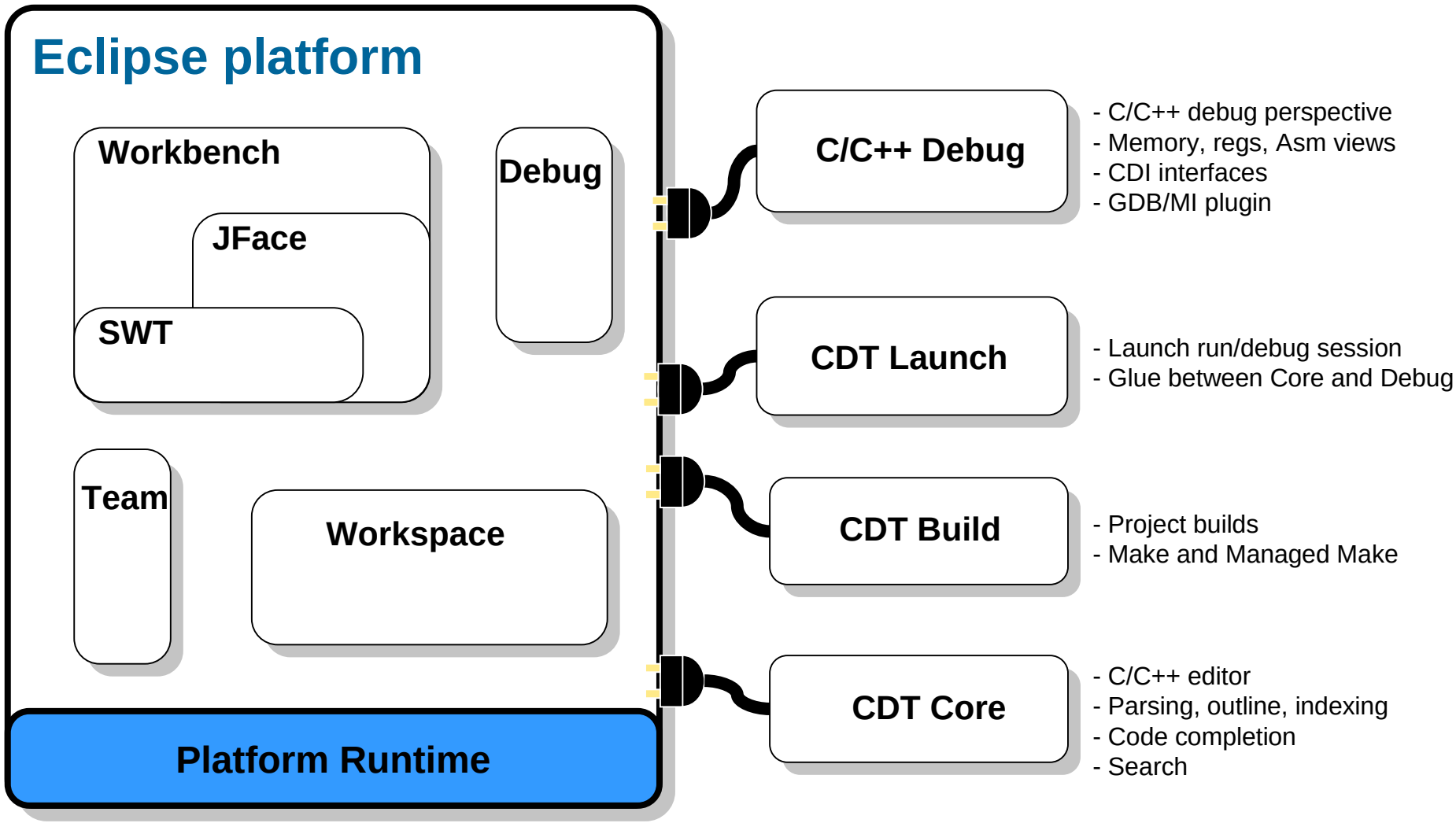

CDT Core Architecture (partial)

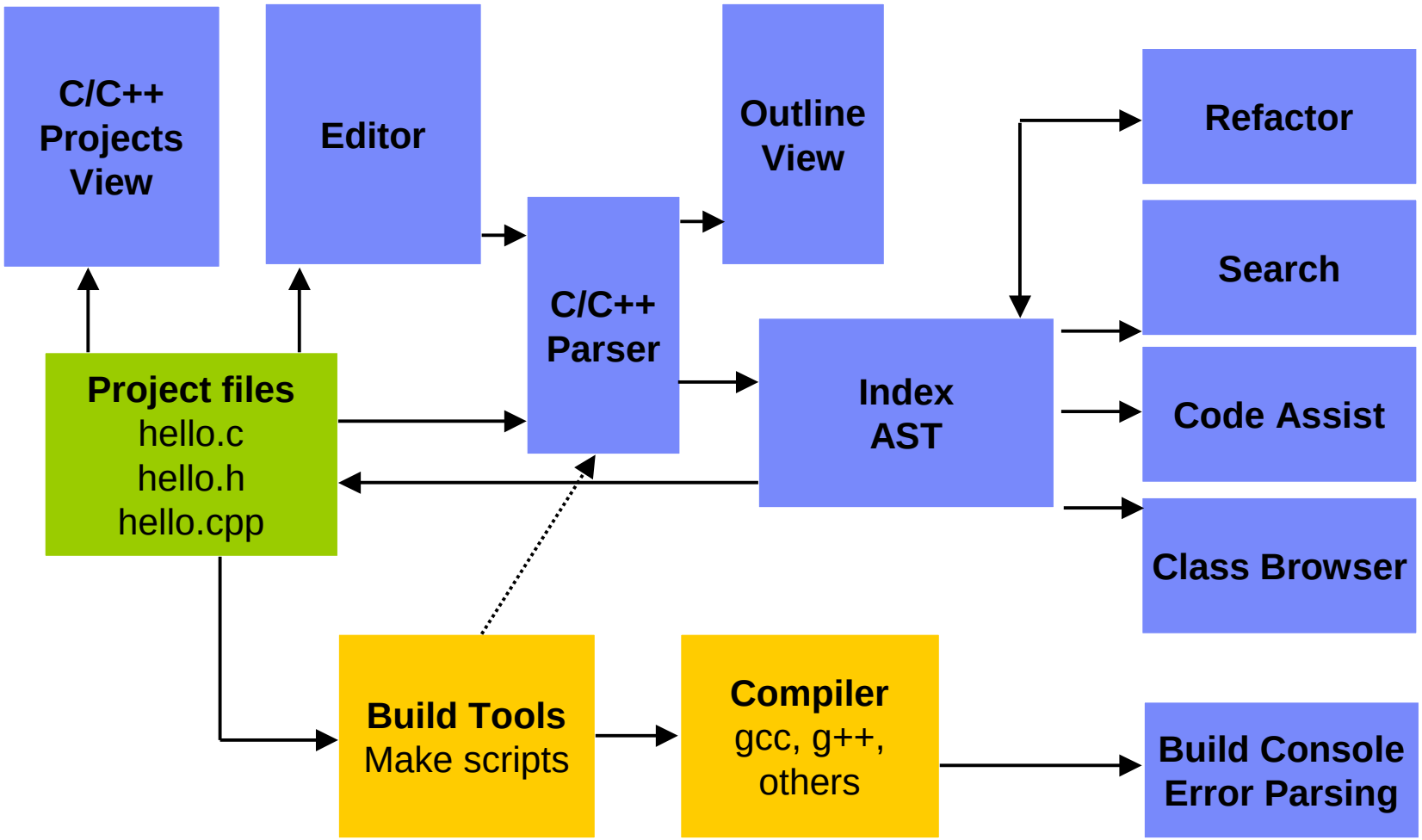

CDT Core Features

- Editor
  - C/C++ syntax highlighting
  - Code completion
  - Hover help
- Parser
  - Parses source files in project to extract C/C++ elements
  - Information used for search, outline, code completion
- Search
- API and extension points to allow extensibility
- C++ Development
  - Class creation wizards

CDT Build Features

- Standard Make
  - Re-uses existing makefiles
  - Simple integration with arbitrary build systems
  - Parsing of toolchain output to generate error markers
- Managed Make
  - Manages compiles and toolchain directly
  - No makefile editing
  - Fine control over compile, link settings

CDT Debug Features

- Portable source-level debugger
- Various views that extend Eclipse debug framework
  - Registers
  - Memory
  - Signals
  - Shared libraries
- CDI (C Debugger Interface)
  - MI plugin implementation (interface to GDB through machine-independent interface)
  - Support for MI level 1 and 2
  - Integrates with gdb version 5.2.1 and above
  - Allows targeting of a wide variety of CPU architecture
  - CDI APIs allow programmatic control over debugger

CDT Roadmap

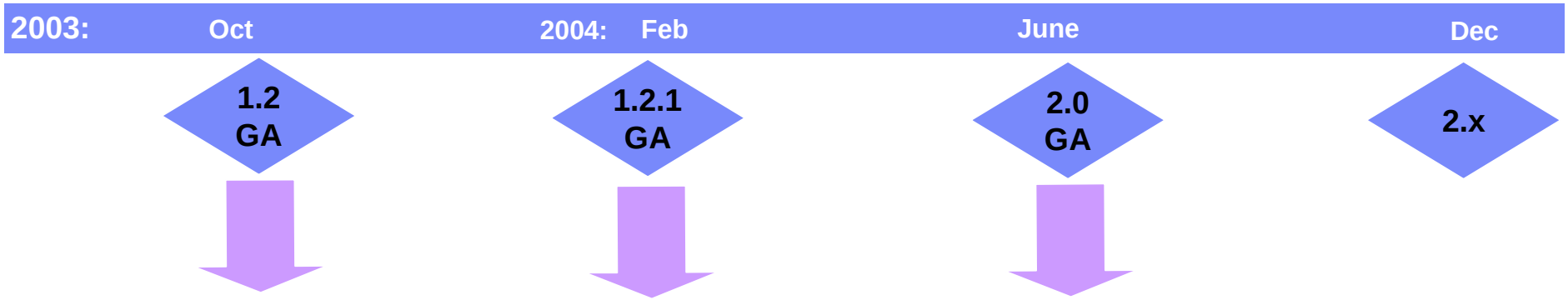

- Improved parser
- Search/navigation
- Wizards (C++)
- Managed builds
- Debug updates
- GDB MI v.2

- Maintenance update
- Eclipse 2.1.x based

- Based on Eclipse 3.0
- Integration API
- CDOM, refactoring
- Managed build updates
- Class browser

Embedded Extensions

Define other frameworks:
- Target abstraction
- Tracing
- Profiling

CDT 1.2 Release Highlights

- Feature enhancements
  - Search, indexer, parser
  - First iteration of managed build
  - Debugger enhancements (inc. GDB MI/2)
- Improved testing
  - All platforms tested
  - Significant test coverage
- Documentation – user's guide
- Improved project management
  - Planning and tracking
  - Builds
  - Web site

CDT 2.0 Plan – Key Themes

- Improved out-of-box experience for new users
- Eclipse 3.0 support and UI compliance
- Productization: I18N and accessibility
- Enhance capability of code modeling capabilities
  - Parser, indexer, AST/DOM
- Enhance capability of end user functionality
  - Search, content assist, managed build
  - Debug, breakpoints, expressions
- Performance improvements
  - Source management in debugger
  - Indexing and parsing
  - View bookkeeping in debugger
- New Features
  - Class browser, refactoring
  - Mixed source/assembly presentation in debugger
- ISV documentation
  - CDT core APIs
  - CDI debug API

CDT 2.0 Parser/AST/DOM

- Improve accuracy of parser
- Improve reporting of parse errors
- Improve coverage of gcc/g++ language extensions
- Support for selection search and content assist
- Complete AST, the beginning of the DOM
- Language variants – support through extension mechanism

C/C++ Search/Indexer/Content Assist

- Improve performance and scalability of indexer
- Support search based on selection in editor
- Support content-assist completion of C++ elements
  - Use parser for accuracy
  - Don’t forget C - link time scoping
- Support proper parsing in standard make build environment
  - Need build options

Managed Build

- Support multiple targets, build goals, tool chains, configurations per project
- Enhance usability
  - Setting of options on multiple configurations at a time
  - Separation of build goal from target
  - Reasonable defaults at project creation time (improve out-of-box)
- Support different types of tools (e.g. bison/flex, gcj).
- Support for different make utilities (maybe even non-make?)

Refactoring

- Similar to JDT
  - But with simpler framework
- Start with rename
  - Simply search and replace
- Move onto fancier refactorings once DOM is writable (post 2.0)
- Undo manager
  - To manage undo across multiple files

CDT 2.0 Debug Features

- CDI
  - Revision
  - Documentation
  - Abstract implementation
- Breakpoints
  - Deferred breakpoints
  - Thread-restricted breakpoints
  - Breakpoints in external files
- Expressions
  - Make persistent across workbench sessions
  - Add action to the Expressions view
- Source Management
  - Performance improvements
  - Duplicate files
  - Prefix mapping
- Editors
  - Mixed disassembly/source presentation
- Memory View
  - New design and implementation
- Registers View
  - Registers bookkeeping (query on demand)
- Variables View
  - Improve detail pane
- UI Improvements
  - Usability

Example Integration - Extending the Debugger

Debugger launch

- Standard debug launch for plain gdb, cygwin and gdb server
- May need to start session with own flavor of gdb, custom options
- May need to customize to perform additional steps, for instance:
  - Start simulator
  - Download code to target
  - Download additional files to target
  - Start extra tools

Example Integration – CDT Debugger

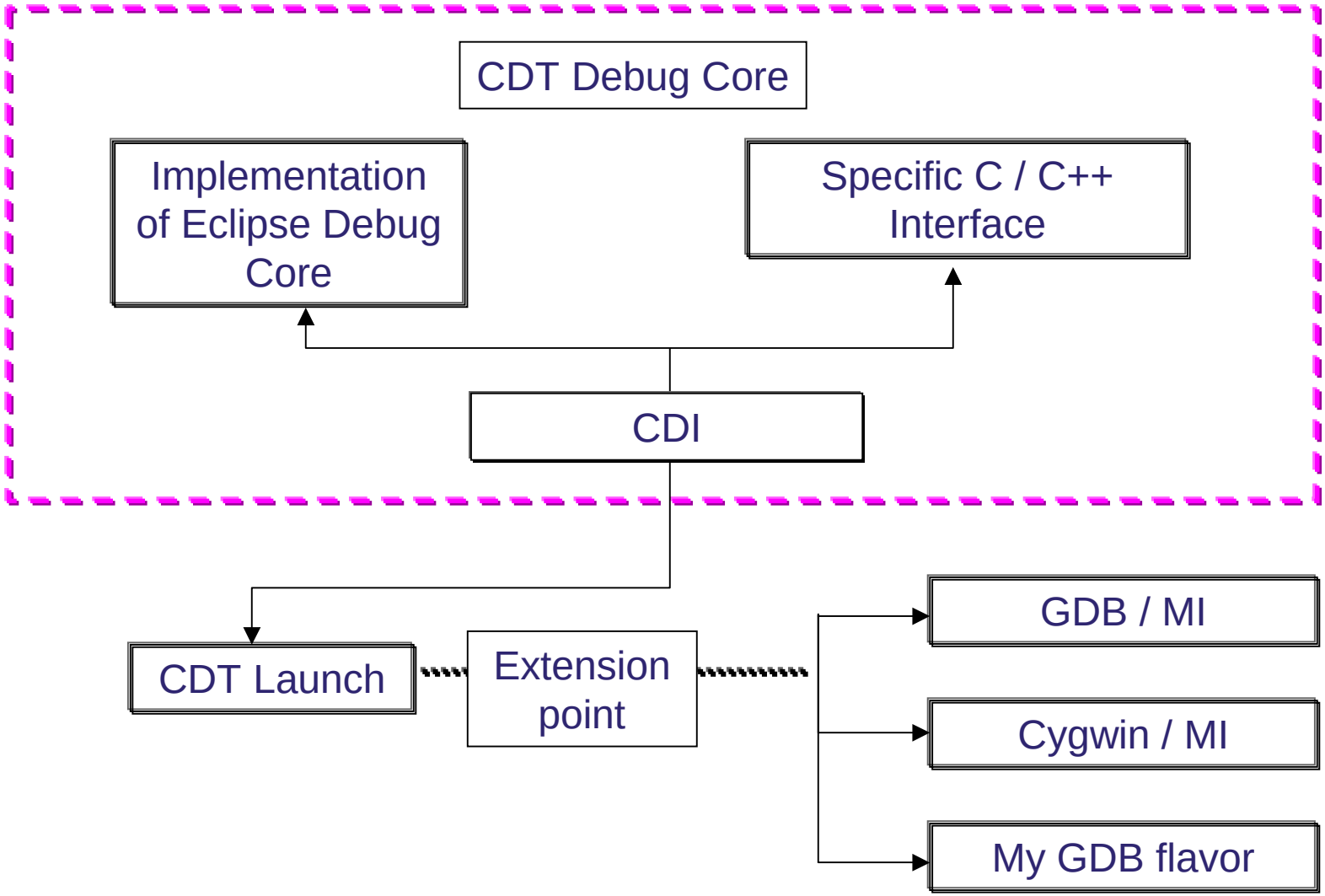

CDT Debug Extension Points

You need to implement two debugger extension points:

point="org.eclipse.cdt.debug.core.CDebugger“

point="org.eclipse.cdt.debug.ui.CDebuggerPage">

```
<extension
      point="org.eclipse.cdt.debug.core.CDebugger">
    <debugger
        platform="native"
        name="%GDBDebugger.name"
        modes="run,core,attach"
        cpu="native"
        class="org.eclipse.cdt.debug.mi.core.GDBDebugger"
        id="org.eclipse.cdt.debug.mi.core.CDebugger">
    </debugger>
</extension>
<extension
      point="org.eclipse.cdt.debug.ui.CDebuggerPage">
    <debugPage
        class="org.eclipse.cdt.debug.mi.internal.ui.GDBDebuggerPage"
        id="org.eclipse.cdt.debug.mi.GDBDebuggerPage"
        debuggerID="org.eclipse.cdt.debug.mi.core.CDebugger">
    </debugPage>
</extension>
```

Code starting points:

```
org.eclipse.cdt.debug.mi.core -> GDBServerDebugger.java
org.eclipse.cdt.debug.mi.ui   -> GDBServerDebuggerPage.java
about ~200 lines
```

Example of integrating with CDT – Hover Text

```
for(i = 0; i < argc; i++) {
    printf("Checking directory %s \n", argv[i]);

    len = strlen(argv[i]);
```

strlen() - Compute the length of a string

#include <string.h>
size_t strlen(const char * s);

What hover help does

- Provides additional pop-up help in C editor
- Can provide info, tips, documentation on API calls
- Information can come from indexer, or from external contribution

Why provide an external contribution

- API summary for binary libraries
- API docs for system libraries

How to do this

- Implement the “org.eclipse.cdt.ui.textHovers” extension point

```
<extension-point id="textHovers" name="%textHoversName"/>
```

Example

- Redhat built text hover plugin that provides help on Linux APIs
- Help info extracted from man pages

Where CDT is Going

- Long-term features
  - Integrated Java and C/C++ development
  - Non-gdb based debugger
  - Project templates
  - Parse errors and quick fix
  - Autoconf/automake support
- Increase adoption of CDT
  - Make it easier for ISVs to ship Eclipse/CDT
  - Encourage integrations with CDT
- Extend CDT to embrace embedded needs
- Provide “mix-and-match” platform for C/C++ tooling

Extending CDT for Embedded – Some Ideas

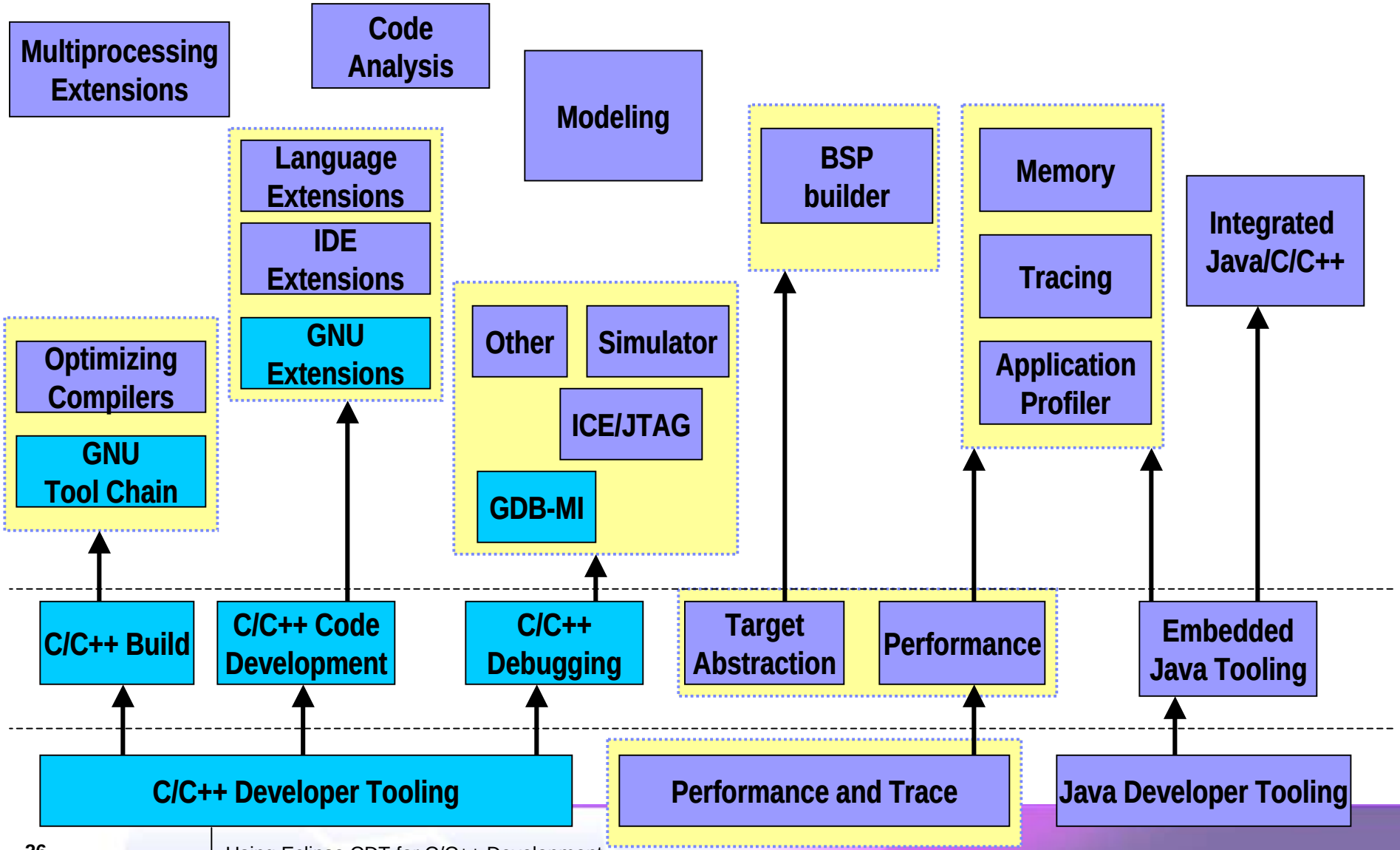

Ultimate Deployment Scenarios

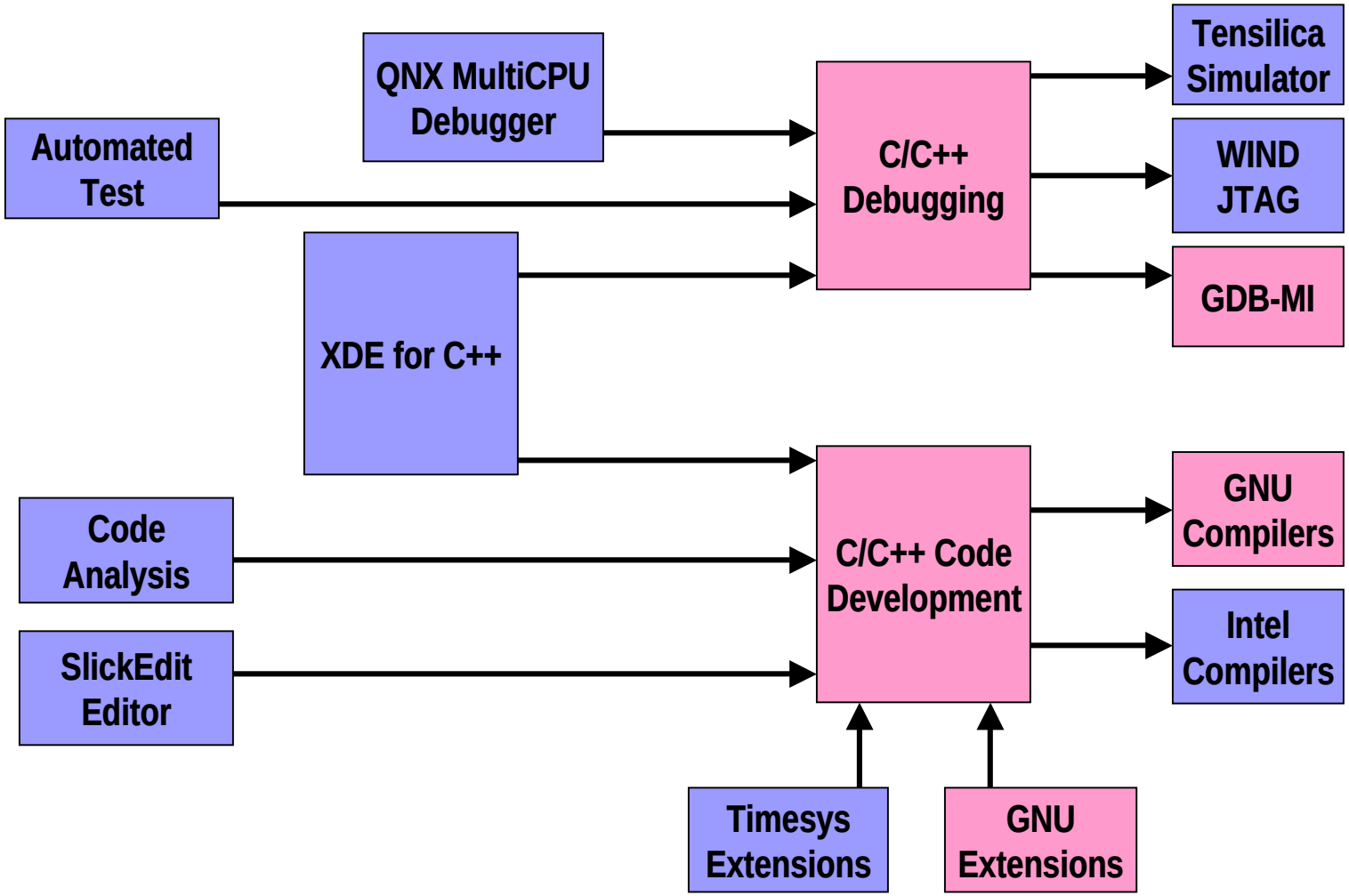

How to Contribute to CDT

- As a user of CDT
  - Download and use it for your C/C++ development
  - Provide feedback on features, usability
  - Suggest improvements
  - Report bugs
- As a developer of CDT
  - Provide patches and bugfixes
  - Implement features
  - CDT has no shortage of “hard” problems to solve
- Other areas
  - User documentation, How-to’s, FAQ
  - Example integrations
  - Plugins that extend CDT

Want to get Involved? Visit www.eclipse.org/cdt!

Conclusion

- A lot of community interest in CDT
- Several commercial products shipping with CDT
- CDT feature set/architecture evolving based on feedback and needs
- CDT 2.0
  - Significant feature enhancements
  - Brings CDT in sync with base Eclipse platform
- We would love for you to get involved
  - As a user and developer
  - Several areas in need of contributions and leadership