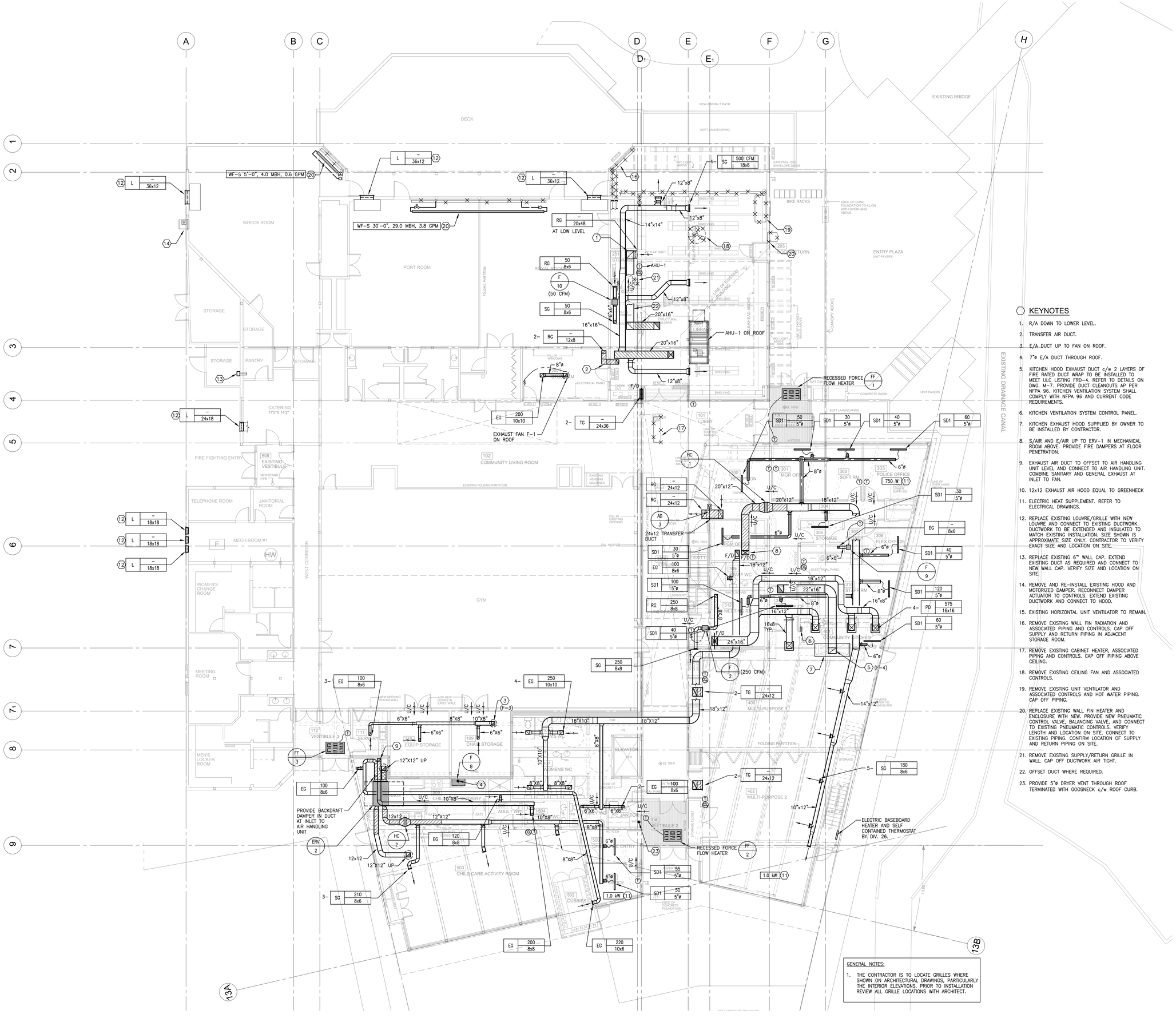

KEYNOTES

1. R/A DOWN TO LOWER LEVEL.
2. TRANSFER AIR DUCT.
3. E/A DUCT UP TO FAN ON ROOF.
4. 7"ø E/A DUCT THROUGH ROOF.
5. KITCHEN HOOD EXHAUST DUCT c/w 2 LAYERS OF FIRE RATED DUCT WRAP TO BE INSTALLED TO MEET ULC LISTING FRD-4. REFER TO DETAILS ON DWG. M-7. PROVIDE DUCT CLEANOUTS AP PER NFPA 96. KITCHEN VENTILATION SYSTEM SHALL COMPLY WITH NFPA 96 AND CURRENT CODE REQUIREMENTS.
6. KITCHEN VENTILATION SYSTEM CONTROL PANEL.
7. KITCHEN EXHAUST HOOD SUPPLIED BY OWNER TO BE INSTALLED BY CONTRACTOR.
8. S/AIR AND E/AIR UP TO ERV-1 IN MECHANICAL ROOM ABOVE. PROVIDE FIRE DAMPERS AT FLOOR PENETRATION.
9. EXHAUST AIR DUCT TO OFFSET TO AIR HANDLING UNIT LEVEL AND CONNECT TO AIR HANDLING UNIT. COMBINE SANITARY AND GENERAL EXHAUST AT INLET TO FAN.
10. 12x12 EXHAUST AIR HOOD EQUAL TO GREENHECK
11. ELECTRIC HEAT SUPPLEMENT. REFER TO ELECTRICAL DRAWINGS.
12. REPLACE EXISTING LOUVRE/GRILLE WITH NEW LOUVRE AND CONNECT TO EXISTING DUCTWORK. DUCTWORK TO BE EXTENDED AND INSULATED TO MATCH EXISTING INSTALLATION. SIZE SHOWN IS APPROXIMATE SIZE ONLY. CONTRACTOR TO VERIFY EXACT SIZE AND LOCATION ON SITE.
13. REPLACE EXISTING 6" WALL CAP. EXTEND EXISTING DUCT AS REQUIRED AND CONNECT TO NEW WALL CAP. VERIFY SIZE AND LOCATION ON SITE.
14. REMOVE AND RE-INSTALL EXISTING HOOD AND MOTORIZED DAMPER. RECONNECT DAMPER ACTUATOR TO CONTROLS. EXTEND EXISTING DUCTWORK AND CONNECT TO HOOD.
15. EXISTING HORIZONTAL UNIT VENTILATOR TO REMAIN.
16. REMOVE EXISTING WALL FIN RADIATION AND ASSOCIATED PIPING AND CONTROLS. CAP OFF SUPPLY AND RETURN PIPING IN ADJACENT STORAGE ROOM.
17. REMOVE EXISTING CABINET HEATER, ASSOCIATED PIPING AND CONTROLS. CAP OFF PIPING ABOVE CEILING.
18. REMOVE EXISTING CEILING FAN AND ASSOCIATED CONTROLS.
19. REMOVE EXISTING UNIT VENTILATOR AND ASSOCIATED CONTROLS AND HOT WATER PIPING. CAP OFF PIPING.
20. REPLACE EXISTING WALL FIN HEATER AND ENCLOSURE WITH NEW. PROVIDE NEW PNEUMATIC CONTROL VALVE, BALANCING VALVE, AND CONNECT TO EXISTING PNEUMATIC CONTROLS. VERIFY LENGTH AND LOCATION ON SITE. CONNECT TO EXISTING PIPING. CONFIRM LOCATION OF SUPPLY AND RETURN PIPING ON SITE.
21. REMOVE EXISTING SUPPLY/RETURN GRILLE IN WALL. CAP OFF DUCTWORK AIR TIGHT.
22. OFFSET DUCT WHERE REQUIRED.
23. PROVIDE 5"ø DRYER VENT THROUGH ROOF TERMINATED WITH GOOSNECK c/w ROOF CURB.

GENERAL NOTES:

1. THE CONTRACTOR IS TO LOCATE GRILLES WHERE SHOWN ON ARCHITECTURAL DRAWINGS, PARTICULARLY THE INTERIOR ELEVATIONS. PRIOR TO INSTALLATION REVIEW ALL GRILLE LOCATIONS WITH ARCHITECT.

Urban Arts
Architecture * Urban Design
#401 - 134 Abbott Street, Vancouver, BC, V6B 2K4
t: 604-683-5060 e: info@urban-arts.ca

SEAL:

NOTES:

This drawing is the property of Urban Arts Architecture and may not be reproduced without their permission and unless the reproduction carries their name. All designs and all other information shown on this drawing are for use on the specified project only and shall not be used otherwise without written permission of this office.

The Contractor shall check and verify all dimensions and report any discrepancies before proceeding.

Do not scale drawings.

PROJECT NORTH
NORTH

MMM GROUP
MMM Group Limited
1045 Howe Street, Suite 700
Vancouver, BC V6Z 2A9
t 604.685.9381
f 604.683.8655
www.mmm.ca

Ref. No. 50-10-346

:Date	:Note
SEP 8/11	ISSUED FOR TENDER
AUG 29/11	ISSUED FOR B.P

ISSUED

QUEENSBOROUGH COMMUNITY CENTRE EXPANSION

GROUND FLOOR PLAN HVAC

M-1

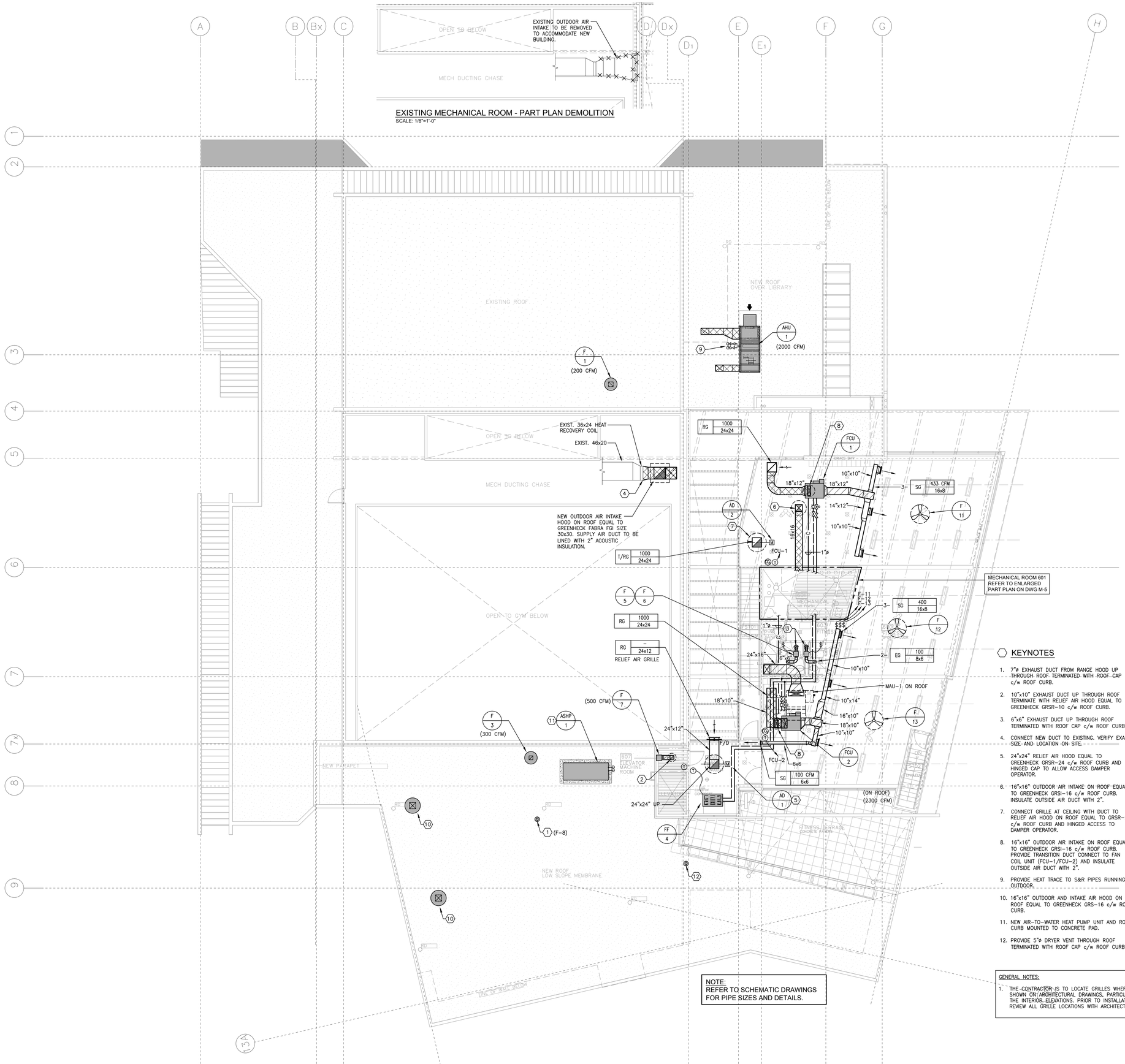

NOTE:
REFER TO SCHEMATIC DRAWINGS FOR PIPE SIZES AND DETAILS.

KEYNOTES

1. 7"ø EXHAUST DUCT FROM RANGE HOOD UP THROUGH ROOF TERMINATED WITH ROOF CAP c/w ROOF CURB.
2. 10"x10" EXHAUST DUCT UP THROUGH ROOF TERMINATE WITH RELIEF AIR HOOD EQUAL TO GREENHECK GRSR-10 c/w ROOF CURB.
3. 6"x6" EXHAUST DUCT UP THROUGH ROOF TERMINATED WITH ROOF CAP c/w ROOF CURB.
4. CONNECT NEW DUCT TO EXISTING. VERIFY EXACT SIZE AND LOCATION ON SITE.
5. 24"x24" RELIEF AIR HOOD EQUAL TO GREENHECK GRSR-24 c/w ROOF CURB AND HINGED CAP TO ALLOW ACCESS DAMPER OPERATOR.
6. 16"x16" OUTDOOR AIR INTAKE ON ROOF EQUAL TO GREENHECK GRSI-16 c/w ROOF CURB. INSULATE OUTSIDE AIR DUCT WITH 2".
7. CONNECT GRILLE AT CEILING WITH DUCT TO RELIEF AIR HOOD ON ROOF EQUAL TO GRSR-24 c/w ROOF CURB AND HINGED ACCESS TO DAMPER OPERATOR.
8. 16"x16" OUTDOOR AIR INTAKE ON ROOF EQUAL TO GREENHECK GRSI-16 c/w ROOF CURB. PROVIDE TRANSITION DUCT CONNECT TO FAN COIL UNIT (FCU-1/FCU-2) AND INSULATE OUTSIDE AIR DUCT WITH 2".
9. PROVIDE HEAT TRACE TO S&R PIPES RUNNING OUTDOOR.
10. 16"x16" OUTDOOR AND INTAKE AIR HOOD ON ROOF EQUAL TO GREENHECK GRS-16 c/w ROOF CURB.
11. NEW AIR-TO-WATER HEAT PUMP UNIT AND ROOF CURB MOUNTED TO CONCRETE PAD.
12. PROVIDE 5"ø DRYER VENT THROUGH ROOF TERMINATED WITH ROOF CAP c/w ROOF CURB.

GENERAL NOTES:

1. THE CONTRACTOR IS TO LOCATE GRILLES WHERE SHOWN ON ARCHITECTURAL DRAWINGS, PARTICULARLY THE INTERIOR ELEVATIONS. PRIOR TO INSTALLATION REVIEW ALL GRILLE LOCATIONS WITH ARCHITECT.

Urban arts
Architecture * Urban Design
#401 - 134 Abbott Street, Vancouver, BC, V6B 2K4
t: 604-683-5060 e: info@urban-arts.ca

SEAL:

NOTES:

This drawing is the property of Urban Arts Architecture and may not be reproduced without their permission and unless the reproduction carries their name. All designs and all other information shown on this drawing are for use on the specified project only and shall not be used otherwise without written permission of this office.

The Contractor shall check and verify all dimensions and report any discrepancies before proceeding.

Do not scale drawings.

PROJECT NORTH
NORTH

MMM GROUP
MMM Group Limited
1045 Howe Street, Suite 700
Vancouver, BC V6Z 2A9
t: 604.685.9381
f: 604.683.8655
www.mmm.ca

Ref. No. 50-10-346

iDate	iNote
SEP 8/11	ISSUED FOR TENDER
AUG 29/11	ISSUED FOR B.P

ISSUED

QUEENSBOROUGH COMMUNITY CENTRE EXPANSION

SECOND FLOOR PLAN HVAC

M-2

RADIANT FLOOR HEATING SUMMARY

MANIFOLD No.	ZONE No.	ROOM No.	AREA (SQ.FT)	No. OF LOOP	TOTAL RAD. FLOOR CAP. (BTUH)	LOOP FLOW (GPM)	MANIFOLD FLOW (GPM)	HD LOSS PER LOOP (FT H20)	TUBE SPACING (IN)
1	10	ATRIUM 103	1108	10	26,277	0.5	5.5	3.4	6
2	1	CHILD CARE ACTIVITY ROOM 503	1375	8	29,205	0.8	6.9	6.4	9
2	2	OFFICE 501	100	1	2,159	0.4	6.9	2.1	6
2	15	STORAGE 507	135	1	1,932	0.8	6.9	1.3	12
3	3	MULTI–PURPOSE 2 402	905	6	18,977	0.7	4.0	4.4	9
4	4	MULTI–PURPOSE 1 400	1015	5	14,886	0.6	3.1	3.9	12
5	5	STAFF ROOM 310	270	2	4,886	0.5	1.9	1.9	12
5	6	FLEX OFFICE 308	104	1	2,044	0.4	1.9	1.4	9
5	12	PGM OFFICE 305	116	1	682	0.1	1.9	0.2	12
5	13	MEETING RM 312	157	1	1,136	0.2	1.9	0.5	12
5	14	FLEX OFFICE 311	81	1	455	0.1	1.9	0.1	12
6	7	POLICE OFFICE 303	176	2	3,986	0.4	1.9	1.6	6
6	8	SOFT RM 302	110	1	2,044	0.4	1.9	1.5	9
6	9	MGR OFFICE 301	156	1	1,591	0.3	1.9	1.0	12
6	11	RECEPTION 300	271	2	1,477	0.2	1.9	0.2	12

NOTE: ALL IN-FLOOR PIPES SHALL BE 1/2"Ø hePEX.

IN-FLOOR HEATING NOTES:

1. ALL UFH PIPE IS hePEX CROSS-LINKED POLYETHYLENE c/w INTEGRAL OXYGEN DIFFUSION BARRIER, UNLESS NOTED OTHERWISE.

2. THE SYSTEM IS TO BE PRESSURIZED TO AT LEAST 40 PSIG USING WATER, PRIOR TO AND DURING, THE FINAL FLOOR INSTALLATION.

3. CONTRACTOR TO MEASURE AND RECORD ACCURATE LENGTHS OF UNDER FLOOR PIPING DURING INSTALLATION FOR BALANCING PURPOSES.

4. ALL UNDERSLAB HEATING PIPING RUNNING BELOW SLAB IN THE CORRIDOR AREAS MUST BE INSULATED WITH 12mm THICK ARMOURFLEX INSULATION BEFORE CONCRETE IS POURED.

5. ANCHOR ALL PIPES SO THEY DO NOT MOVE DURING CONCRETE POUR. ANY DAMAGED INSULATION MUST BE REPLACED BEFORE CONCRETE POUR.

6. UNDERFLOOR PIPING IN ALL PERIMETER AREAS TO BE REVERSE RETURN.

7. SHOP DRAWINGS TO INCLUDE COMPLETE LOOPS LAYOUT AND CALCULATION FOR CONSULTANT REVIEW.

KEYNOTES

1. HEATING LOAD FOR RADIANT IN–FLOOR HEATING (TYPICAL).
2. EXTEND OF ZONE HEATING (TYPICAL).
3. MANIFOLD c/w PRE–ASSEMBLED WALL RECESSED CABINET. REFER TO DETAILS.
4. CONDENSATE DRAIN DISCHARGE TO FUNNEL DRAIN. REFER TO PLUMBING DRAWINGS.

NOTE:
REFER TO SCHEMATIC DRAWINGS FOR PIPE SIZES AND DETAILS.

NOTE:
INSTALLATION OF RADIANT FLOOR HEATING PIPES IS TO BE COORDINATED WITH GENERAL CONTRACTOR AND TO BE INSTALLED AFTER ERECTION OF INTERIOR PARTITION WALLS PRIOR TO POURING OF CONCRETE TOPPING.

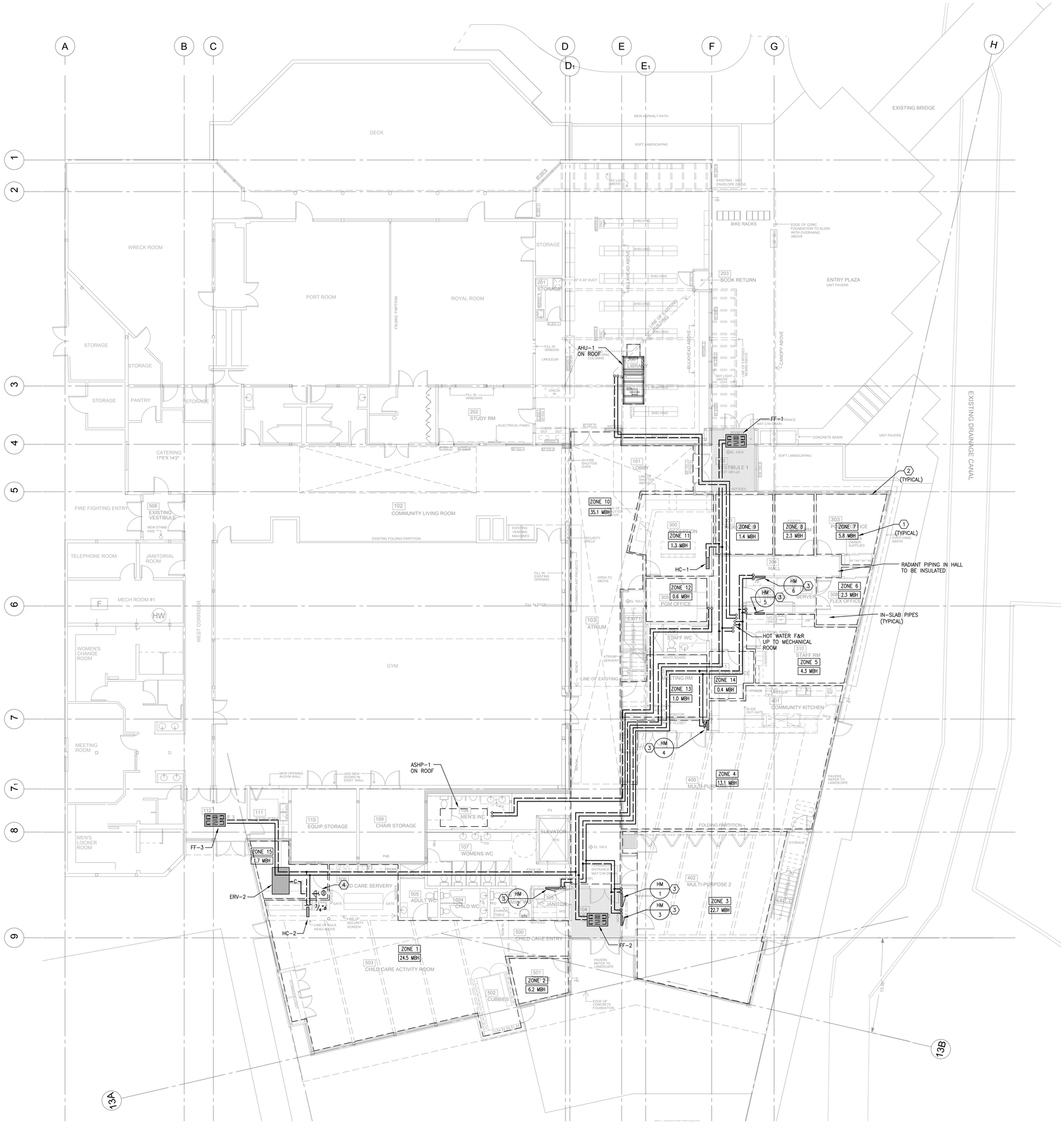

Urban arts
Architecture * Urban Design
#401 - 134 Abbott Street, Vancouver, BC, V6B 2K4
t: 604-683-5060 e: info@urban-arts.ca

SEAL:

NOTES:

This drawing is the property of Urban Arts Architecture and may not be reproduced without their permission and unless the reproduction carries their name. All designs and all other information shown on this drawing are for use on the specified project only and shall not be used otherwise without written permission of this office.

The Contractor shall check and verify all dimensions and report any discrepancies before proceeding.

Do not scale drawings.

PROJECT NORTH
NORTH

MMM GROUP
MMM Group Limited
1045 Howe Street, Suite 700
Vancouver, BC V6Z 2A9
t: 604.685.9381
f: 604.683.8655
www.mmm.ca

Ref. No. 50-10-346

:Date	:Note
SEP 8/11	ISSUED FOR TENDER
AUG 29/11	ISSUED FOR B.P

ISSUED

QUEENSBOROUGH COMMUNITY CENTRE EXPANSION

GROUND FLOOR PLAN HVAC - PIPING

M-3

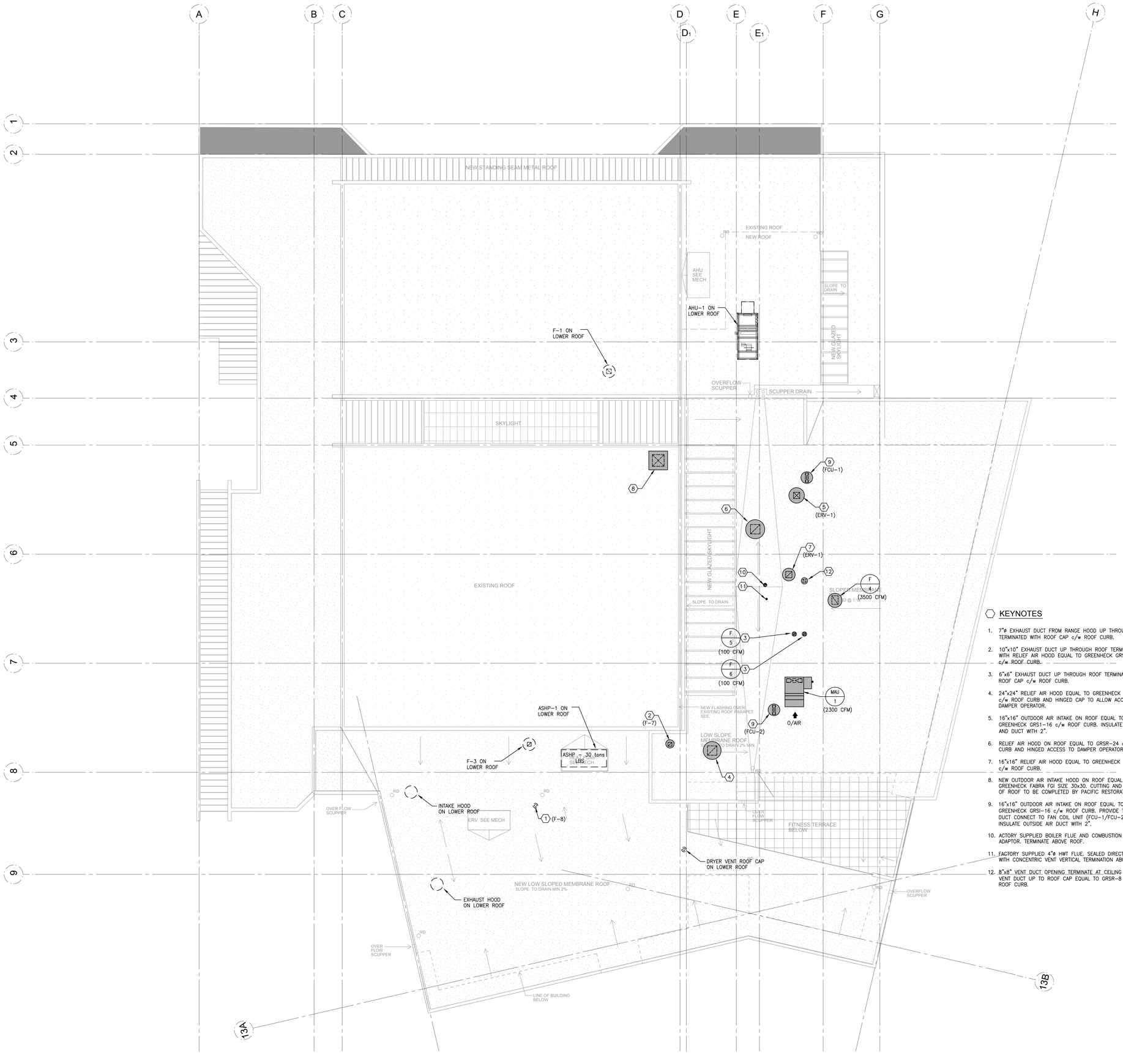

KEYNOTES

1. 7"ø EXHAUST DUCT FROM RANGE HOOD UP THROUGH ROOF TERMINATED WITH ROOF CAP c/w ROOF CURB.
2. 10"x10" EXHAUST DUCT UP THROUGH ROOF TERMINATE WITH RELIEF AIR HOOD EQUAL TO GREENHECK GRSR-10 c/w ROOF CURB.
3. 6"x6" EXHAUST DUCT UP THROUGH ROOF TERMINATED WITH ROOF CAP c/w ROOF CURB.
4. 24"x24" RELIEF AIR HOOD EQUAL TO GREENHECK GRSR-24 c/w ROOF CURB AND HINGED CAP TO ALLOW ACCESS DAMPER OPERATOR.
5. 16"x16" OUTDOOR AIR INTAKE ON ROOF EQUAL TO GREENHECK GRS1-16 c/w ROOF CURB. INSULATE OUTSIDE AND DUCT WITH 2".
6. RELIEF AIR HOOD ON ROOF EQUAL TO GRSR-24 c/w ROOF CURB AND HINGED ACCESS TO DAMPER OPERATOR.
7. 16"x16" RELIEF AIR HOOD EQUAL TO GREENHECK GRSR-16 c/w ROOF CURB.
8. NEW OUTDOOR AIR INTAKE HOOD ON ROOF EQUAL TO GREENHECK FABRA FGI SIZE 30x30. CUTTING AND REPAIR OF ROOF TO BE COMPLETED BY PACIFIC RESTORATIONS LTD.
9. 16"x16" OUTDOOR AIR INTAKE ON ROOF EQUAL TO GREENHECK GRSI-16 c/w ROOF CURB. PROVIDE TRANSITION DUCT CONNECT TO FAN COIL UNIT (FCU-1/FCU-2) AND INSULATE OUTSIDE AIR DUCT WITH 2".
10. ACTORY SUPPLIED BOILER FLUE AND COMBUSTION AIR ADAPTOR. TERMINATE ABOVE ROOF.
11. FACTORY SUPPLIED 4"ø HWT FLUE, SEALED DIRECT VENT WITH CONCENTRIC VENT VERTICAL TERMINATION ABOVE ROOF.
12. 8"x8" VENT DUCT OPENING TERMINATE AT CEILING LEVEL. VENT DUCT UP TO ROOF CAP EQUAL TO GRSR-8 c/w ROOF CURB.

Urban arts
Architecture * Urban Design
#401 - 134 Abbott Street, Vancouver, BC, V6B 2K4
t: 604-683-5060 e: info@urban-arts.ca

SEAL:

NOTES:

This drawing is the property of Urban Arts Architecture and may not be reproduced without their permission and unless the reproduction carries their name. All designs and all other information shown on this drawing are for use on the specified project only and shall not be used otherwise without written permission of this office.

The Contractor shall check and verify all dimensions and report any discrepancies before proceeding.

Do not scale drawings.

PROJECT NORTH
NORTH

MMM GROUP
MMM Group Limited
1045 Howe Street, Suite 700
Vancouver, BC V6Z 2A9
t: 604.685.9381
f: 604.683.8655
www.mmm.ca

Ref. No. 50-10-346

:Date	:Note
SEP 8/11	ISSUED FOR TENDER
AUG 29/11	ISSUED FOR B.P

:ISSUED

QUEENSBOROUGH COMMUNITY CENTRE EXPANSION

ROOF PLAN HVAC

M-4

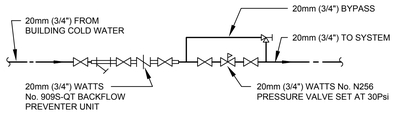

DETAIL OF SYSTEM COLD WATER MAKE-UP

N.T.S. M/SD #1008

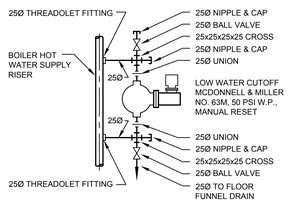

DETAIL LOW WATER CUTOFF PIPING

N.T.S. M/SD #2018

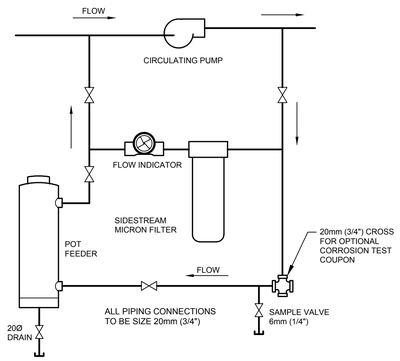

POT FEEDER AND MICRON FILTER

N.T.S. M/SD #1010

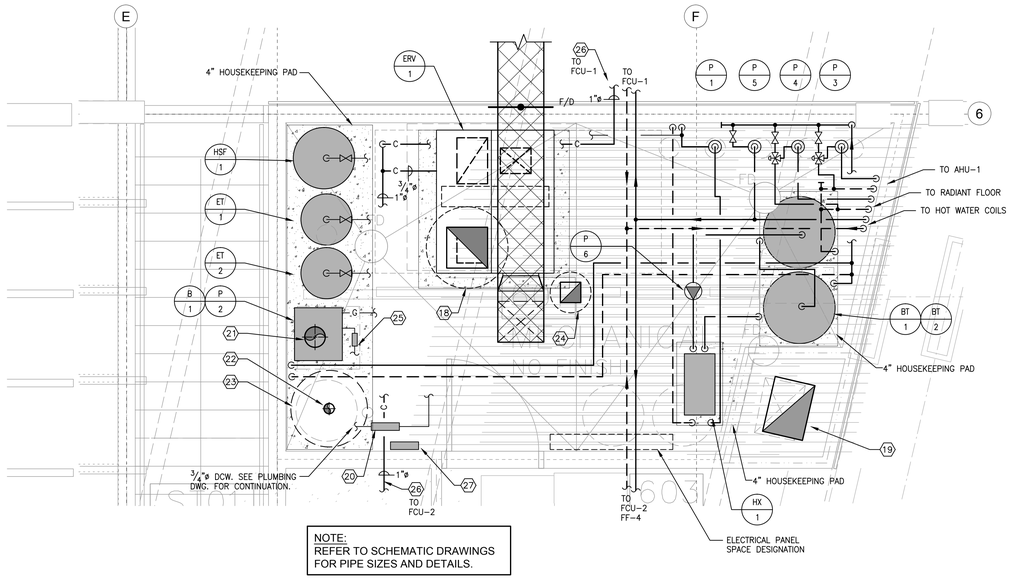

NOTE:
REFER TO SCHEMATIC DRAWINGS
FOR PIPE SIZES AND DETAILS.

MECHANICAL ROOM 601

SCALE: 1/2" = 1'-0"

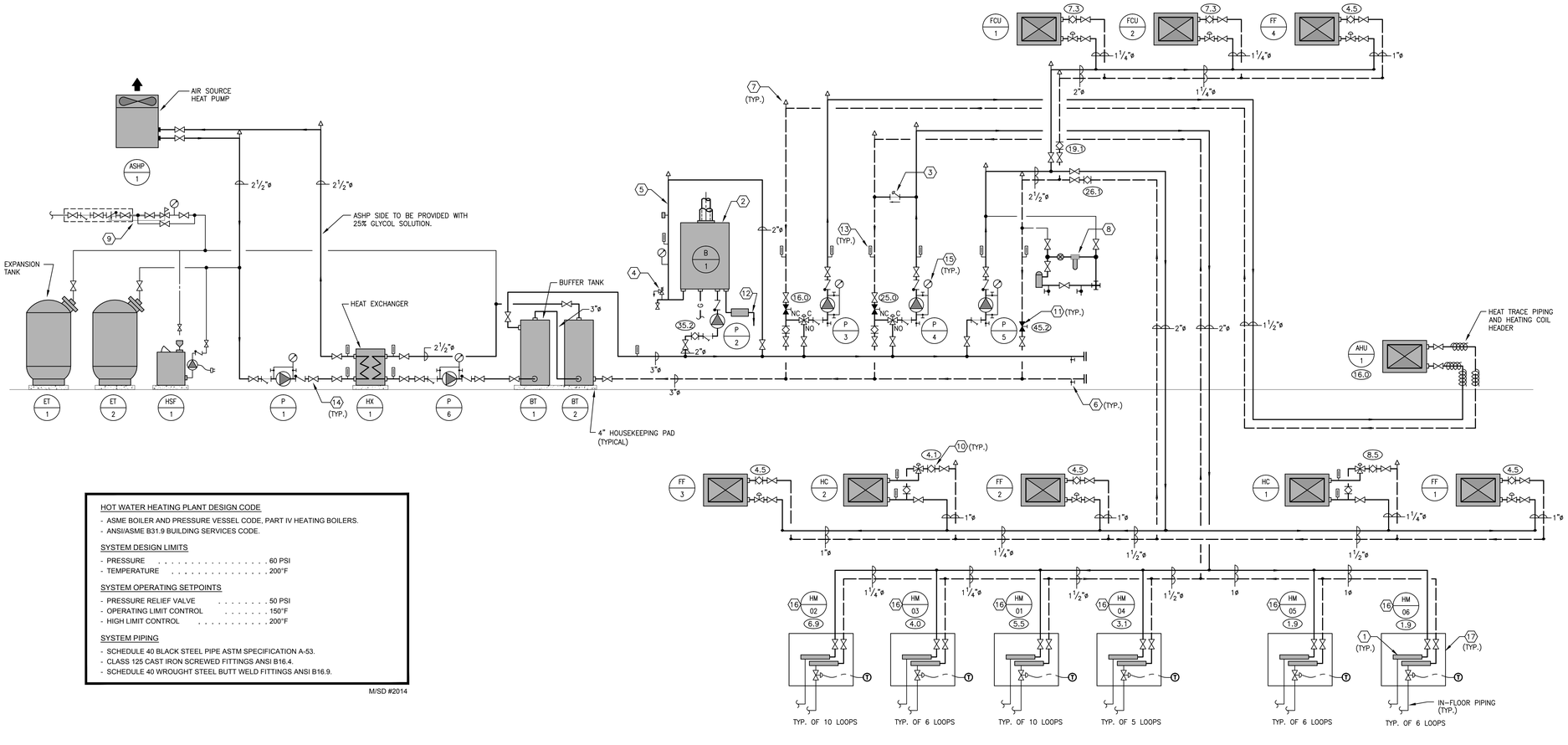

HOT WATER HEATING PLANT DESIGN CODE

- ASME BOILER AND PRESSURE VESSEL CODE, PART IV HEATING BOILERS.
- ANSI/ASME B31.9 BUILDING SERVICES CODE.

SYSTEM DESIGN LIMITS

- PRESSURE . . . . . 60 PSI
- TEMPERATURE . . . . . 200°F

SYSTEM OPERATING SETPOINTS

- PRESSURE RELIEF VALVE . . . . . 50 PSI
- OPERATING LIMIT CONTROL . . . . . 150°F
- HIGH LIMIT CONTROL . . . . . 200°F

SYSTEM PIPING

- SCHEDULE 40 BLACK STEEL PIPE ASTM SPECIFICATION A-53.
- CLASS 125 CAST IRON SCREWED FITTINGS ANSI B16.4.
- SCHEDULE 40 WROUGHT STEEL BUTT WELD FITTINGS ANSI B16.9.

M/SD #2014

HOT/CHILLED WATER PIPING SCHEMATIC

NTS

KEYNOTES (SCHEMATIC)

1. RADIANT FLOOR PIPING SUPPLY & RETURN MANIFOLDS.
2. NEW GAS-FIRED BOILER c/w OPERATING, HIGH LIMIT, AND RETURN SENSORS.
3. PRESSURE BY-PASS VALVE.
4. PRESSURE RELIEF VALVE (50 PSI)
5. SUPPLY LINE c/w LOW WATER CUT-OFF AND PRESSURE GAUGE.
6. DRAIN VALVE c/w CAP & CHAIN PLUS SEPARATE BALL SHUT-OFF VALVE. TYPICAL AT ALL LOW POINTS.
7. AUTOMATIC AIR VENT AT HIGH POINTS TO ALLOW AIR VENTING (TYPICAL). PIPE TO FLOOR DRAIN.
8. CHEMICAL POT FEEDER AND MICRON FILTER ASSEMBLY c/w CROSS FOR CORROSION TEST COUPON, SAMPLE TEST VALVE, SIGHT GLASS, AND DRAIN VALVE.
9. 3/4"ø MAKE-UP WATER CONNECTION c/w BACKFLOW PREVENTOR ASSEMBLY.
10. BALANCING GLOBE VALVE.
11. CIRCUIT BALANCING VALVE c/w FLOW MEASURING PORTS.
12. PIPE BOILER CONDENSATE FROM ACID NEUTRALIZER TANK TO FUNNEL FLOOR DRAIN.
13. THERMOMETER
14. SHUT-OFF VALVE.
15. PRESSURE GAUGE.
16. WIRSBO TRUFLOW MANIFOLD WITH THERMAL ACTUATOR ON EACH LOOP.
17. PRE-ASSEMBLED WALL RECESSED MANIFOLD CABINET c/w 50 VA TRANSFORMER. ELECTRICAL CONTRACTOR TO PROVIDE POWER.
18. 16"x16" RELIEF AIR HOOD ON ROOF.
19. 2"x16" KITCHEN EXHAUST DUCT IN F.R. ENCLOSURE AND FIRE WRAP UP TO FAN F-4 ON ROOF.
20. 3/4"ø MAKE-UP WATER CONNECTION c/w BACKFLOW PREVENTOR ASSEMBLY.
21. FACTORY SUPPLIED BOILER FLUE AND COMBUSTION AIR ADAPTOR. TERMINATE ABOVE ROOF.
22. FACTORY SUPPLIED 4"ø HWT FLUE. SEALED DIRECT VENT WITH CONCENTRIC VENT VERTICAL TERMINATION ABOVE ROOF.
23. HOT WATER TANK. REFER TO PLUMBING DRAWINGS.
24. 8"x8" VENT DUCT OPENING TERMINATE AT CEILING LEVEL. VENT DUCT UP TO ROOF CAP EQUAL TO GRSR-8 c/w ROOF CURB.
25. BOILER CONDENSATE ACID NEUTRALIZER AND PIPE TO FUNNEL DRAIN.
26. CONDENSATE DRAIN DISCHARGE TO FUNNEL DRAIN. REFER TO PLUMBING DRAWINGS.
27. DDC PANEL LOCATION.

Urban Arts
Architecture * Urban Design
#401 - 134 Abbott Street, Vancouver, BC, V6B 2K4
t: 604-683-5060 e: info@urban-arts.ca

SEAL:

NOTES:

This drawing is the property of Urban Arts Architecture and may not be reproduced without their permission and unless the reproduction carries their name. All designs and all other information shown on this drawing are for use on the specified project only and shall not be used otherwise without written permission of this office.

The Contractor shall check and verify all dimensions and report any discrepancies before proceeding.

Do not scale drawings.

PROJECT NORTH
NORTH

MMM GROUP
MMM Group Limited
1045 Howe Street, Suite 700
Vancouver, BC V6Z 2A9
t: 604.685.9381
f: 604.683.8655
www.mmm.ca

Ref. No. 50-10-346

:Date	:Note
SEP 8/11	ISSUED FOR TENDER
AUG 29/11	ISSUED FOR B.P

ISSUED

QUEENSBOROUGH COMMUNITY CENTRE EXPANSION

MECHANICAL ROOM LAYOUT HVAC

M-5

FANS

NEW TAG	DESCRIPTION	LOCATION	SERVING	MAKE / MODEL	PERFORMANCE	NOTES
F-1	ROOF EXHAUST FAN	ROOF	STUDY RM 202	GREENHECK G-075	AIR FLOW: 195 CFM E.S.P.: 0.25" WC 1300 RPM, 1/25 HP, 115/1/60	DIRECT DRIVE c/w ROOF CURB, BACKDRAFT DAMPER, BIRDSCREEN, CONTROLLED BY VARIABLE SPEED SWITCH.
F-2	INLINE CABINET FAN	BOARD ROOM 312	BOARD RM 312	GREENHECK CSP-A290	AIR FLOW: 265 CFM E.S.P.: 0.25" WC 1050 RPM, 80 W, 115/1/60	DIRECT DRIVE c/w BACKDRAFT DAMPER, CONTROLLED BY VARIABLE SPEED SWITCH.
F-3	ROOF EXHAUST FAN	ROOF	GYMNASIUM STORAGE	GREENHECK G-075	AIR FLOW: 300 CFM E.S.P.: 0.25" WC 1550 RPM, 1/25 HP, 115/1/60	DIRECT DRIVE c/w ROOF CURB, BACKDRAFT DAMPER, BIRDSCREEN, CONTROLLED BY DDC SYSTEM.
F-4	ROOF EXHAUST FAN	ROOF	KITCHEN HOOD	GREENHECK CUBE-180HP	AIR FLOW: 3500 CFM E.S.P.: 1.75" WC 1610 RPM, 2.0 HP, 208/3/60	BELT DRIVE c/w ROOF CURB & VENTED CURB EXTENSION, HINGED CURB CAP, GREASE TRAP, EXTERNAL WIRING, DISCONNECT SWITCH, NFPA-96 COMPLIANT, CONTROLLED BY KITCHEN EXHAUST PANEL AND INTERLOCKED WITH MAU-1.
F-5	INLINE CABINET FAN	WC 604	WC 604	GREENHECK CSP-B110	AIR FLOW: 98 CFM E.S.P.: 0.25" WC 950 RPM, 80 W, 115/1/60	DIRECT DRIVE c/w BACKDRAFT DAMPER, CONTROLLED BY TIMED DELAY COMBINATION FAN/LIGHT SWITCH.
F-6	INLINE CABINET FAN	WC 605	WC 605	GREENHECK CSP-B110	AIR FLOW: 98 CFM E.S.P.: 0.25" WC 950 RPM, 80 W, 115/1/60	DIRECT DRIVE c/w BACKDRAFT DAMPER, CONTROLLED BY TIMED DELAY COMBINATION FAN/LIGHT SWITCH.
F-7	CABINET CEILING FAN	ELEVATOR RM 607	ELEVATOR RM 607	GREENHECK SP-A510-QD	AIR FLOW: 439 CFM E.S.P.: 0.25" WC 1070 RPM, 224 W, 115/1/60	DIRECT DRIVE c/w BACKDRAFT DAMPER, GRILLE. CONTROLLED BY LINE VOLTAGE REVERSE ACTING THERMOSTAT.
F-8	RANGE HOOD	CHILDCARE 506	CHILDCARE 506	BROAN QT236WWN	AIR FLOW: 210 CFM E.S.P.: 0.25" WC 1.7 AMPS, 115/1/60	36" WIDE RANGEHOOD c/w 7"ø ROUND CONNECTION, WASHABLE MESH GREASE FILTER, POWDER COATED WHITE ENAMEL FINISH, SPEED CONTROL, COOKTOP LIGHT.
F-9	CABINET CEILING FAN	SERVER 307	SERVER 307	GREENHECK SP-A125	AIR FLOW: 104 CFM E.S.P.: 0.25" WC 1100 RPM, 52.5 W, 115/1/60	DIRECT DRIVE c/w BACKDRAFT DAMPER, GRILLE. CONTROLLED BY LINE VOLTAGE REVERSE ACTING THERMOSTAT.
F-10	INLINE CABINET FAN	STORAGE 201	STORAGE 201	GREENHECK SP-A50	AIR FLOW: 50 CFM E.S.P.: 0.1" WC 700 RPM, 18.3 W, 115/1/60	DIRECT DRIVE c/w BACKDRAFT DAMPER, GRILLE. CONTROLLED BY FAN/LIGHT SWITCH.
F-11 F-12 F-13	CEILING FAN	FITNESS 600	FITNESS 600	BANVIL 2000 SILVER LINE	ELECT: 0.7 AMP, 115/1/60	56", COMPLETE WITH REVERSIBLE VARIABLE SPEED SWITCH AND EXTENSION ROD TO SUIT SLOPED ROOF.

AIR HANDLING UNITS

NEW TAG	DESCRIPTION	LOCATION	SERVING	MAKE / MODEL	PERFORMANCE	NOTES
ERV-1	ENERGY RECOVERY VENTILATOR	MECHANICAL 601	GROUND FLOOR VENTILATION	VENMAR ERV-1500i	SUPPLY AIR FLOW: 1500 CFM E.S.P.: 1.2" WC 1631 RPM, 1.0 HP, 208/3/60 EXHAUST AIR FLOW: 1300 CFM E.S.P.: 1.0" WC 1447 RPM, 3/4 HP, 208/3/60 MCA: 9.35 AMP, 208/3/60 UNIT WEIGHT: ±600 LBS	INDOOR UNIT c/w HEAT RECOVERY WHEEL, DOWNFLOW UNIT, 2" MERV 13 FILTER, SINGLE POINT ELECTRICAL CONNECTION, MOTORIZED INTAKE DAMPER, EXHAUST GRAVITY BACKDRAFT DAMPER, CONTROLLED BY BUILDING DDC SYSTEM.
ERV-2	ENERGY RECOVERY VENTILATOR	CEILING SPACE KITCHEN 506	CHILDCARE ACTIVITY 503 VENTILATION	VENMAR ERV-1000i	SUPPLY AIR FLOW: 735 CFM E.S.P.: 0.70" WC EXHAUST AIR FLOW: 640 CFM E.S.P.: 0.5" WC MCA: 21.5 AMP, 120/1/60 UNIT WEIGHT: ±500 LBS	INDOOR UNIT c/w HEAT RECOVERY WHEEL, 2" MERV 13 FILTER, SINGLE POINT ELECTRICAL CONNECTION, MOTORIZED OUTDOOR AIR DAMPER, EXHAUST GRAVITY BACKDRAFT DAMPER, CONTROLLED BY BUILDING DDC SYSTEM.
MAU-1	ROOFTOP MAKE-UP AIR UNIT	ROOF	KITCHEN MAKE-UP AIR	ENG. AIR DJ-20	SUPPLY AIR: 2300 CFM ESP: 1.0 WC HTG INPUT: 200 MBH HTG OUTPUT: 158 MBH TURNDOWN RATIO: 15:1 EFFICIENCY: 79% FAN SIZE 10/10 RPM: 1187 ELECT: 1.5 HP, 208/3/60 WEIGHT: ± 800 LBS	INDIRECT FIRED c/w STAINLESS STEEL HEAT EXCHANGER, 16" ROOF CURB, HEAT/BLOWER AND MOTOR SECTION, FILTER SECTION, INLET AIR DAMPER, INLET HOOD, KITCHEN EXHAUST CONTROL PANEL TO INCLUDE MANUAL START/STOP FOR KITCHEN FAN W/ INTERLOCK FOR MAU-1 AND F-4, STATUS LIGHTS, MANUAL AIR SUPPLY TEMPERATURE CONTROL DIAL, DRY CONTACTS FOR CONNECTION TO DDC SYSTEM AND KITCHEN HOOD FIRE SUPPRESSION SYSTEM.
AHU-1	ROOFTOP AIR-HANDLING UNIT	ROOF	LIBRARY	MCQUAY OAH006GDAC	SUPPLY AIR: 2000 CFM ESP: 0.75" HEATING: CAPACITY: 67,217 BTUH EWT/LWT: 105/96°F EAT/LAT: 55/85.7°F WATER FLOW: 16.0 GPM MAX APD: 0.25" MAX WPD: 2.0 FT COOLING: TOTAL CAP.: 56,401 BTUH SEN. CAP.: 43,255 BUTH ENTERING DB/WB: 80/67°F LEAVING DB/WB: 60.2/58.2°F EWT/LWT: 45/52°F WATER FLOW: 16.0 GPM MAX APD: 0.25" MAX WPD: 2.0 FT ELECT: 1.5 HP, 208/3/60 FOOTPRINT: ±118"x52" WEIGHT: ±1508 LBS	c/w ROOF CURB, COMBINATION HEATING/COOLING COIL, 2" MERV 13 FILTER, MIXING BOX/ECONOMIZER SECTION, HORIZONTAL SUPPLY AND RETURN.

FAN COIL UNITS

NEW TAG	DESCRIPTION	LOCATION	SERVING	MAKE / MODEL	PERFORMANCE	NOTES
FCU-1 FCU-2	FAN COIL UNIT	FITNESS 600	FITNESS 600	ENVIRO-TEC HPM SIZE 14	SUPPLY AIR: 1300 CFM ESP: 0.5 WC 4-ROW HEATING/COOLING COIL HTG CAPACITY: 71 MBH EWT/LWT: 105/85°F EAT/LAT: 38/87°F CLG CAPACITY: 36.7 MBH EWT/LWT: 45/55°F EAT (DB/WB): 75/63°F LAT: 56°F WATER FLOW: 7.3 GPM WPD: 6.5' WC APD: 0.22" WC 2 x 1/3 HP MOTORS, 208/1/60 WEIGHT: ± 260 LBS	FAN COIL c/w 2" MERV 13 FILTER, 4-ROW COIL, ECM MOTOR, MIXING BOX WITH TOP AND END RETURN, MIXING DAMPERS, CONTROLLED BY BUILDING DDC SYSTEM

AIR SOURCE HEAT PUMP

NEW TAG	DESCRIPTION	LOCATION	SERVING	MAKE / MODEL	PERFORMANCE	NOTES
ASHP-1	AIR SOURCE HEAT PUMP	ROOF	HEATING SYSTEM	AERMEC NRL 0550 HA	WATER FLOW: 48 GPM WPD: 1.72 PSI HEATING: CAPACITY: 217.9 MBH AMBIENT AIR TEMPERATURE: 18°F EWT/LWT: 95/105°F COP (@ DESIGN COND.): 1.92 COOLING: CAPACITY: 29 TONS AMBIENT AIR TEMPERATURE: 84°F EWT/LWT: 61/45°F EER: 2.82 FOOTPRINT: 43"x116" UNIT WEIGHT: ±2500 LBS ELECTRICAL: 230/3/60, MCA 161.8	HEAT PUMP DESIGN c/w DESUPERHEATER, HEATING/COOLING SWITCHOVER, CONTROL PANEL WITH BACNET INTERFACE TO DDC SYSTEM, 25% GLYCOL ANTIFREEZE.

FORCE FLOW HEATERS

NEW TAG	DESCRIPTION	LOCATION	SERVING	MAKE / MODEL	PERFORMANCE	NOTES
FF-1 FF-2 FF-3 FF-4	FORCE FLOW HEATER	VESTIBULE 100 VESTIBULE 104 VESTIBULE 112 BRIDGE 606	VESTIBULE 100 VESTIBULE 104 VESTIBULE 112 BRIDGE 606	ROSEMEX F-600-A	SUPPLY AIR: 410 CFM HTG CAPACITY: 22.2 MBH EWT/LWT: 130/110°F EAT: 60°F WATER FLOW: 4.5 GPM WPD: 2.0' WC 1/4 HP, 115/1/60 WEIGHT: ± 125 LBS	FULLY RECESSED c/w HINGED PANEL, CEILING MOUNTED. CONTROLLED BY BUILDING DDC SYSTEM.

HEATING COILS

NEW TAG	DESCRIPTION	LOCATION	SERVING	MAKE / MODEL	PERFORMANCE	NOTES
HC-1	HOT WATER HEATING COIL	HALL 304	SERVER 307	YORK SIZE 28"x16"	AIR FLOW: 1500 CFM EAT/LAT: 18/70°F EWT/LWT: 105/85 CAPACITY: 84.2 MBH WATER FLOW: 8.5 GPM MAX APD: 0.25" WC MAX WPD: 4.0' WC	DUCT MOUNTED, HEATING/COOLING CHANGEOVER COIL c/w CONDENSATE DRAIN PAN AND DRAIN CONNECTION.
HC-2	HOT WATER HEATING COIL	CHILDCARE 506	CHILDCARE 506	YORK SIZE 18"x12"	AIR FLOW: 725 CFM EAT/LAT: 18/70°F EWT/LWT: 105/85 CAPACITY: 40.7 MBH WATER FLOW: 4.1 GPM MAX APD: 0.25" WC MAX WPD: 4.0' WC	DUCT MOUNTED, HEATING/COOLING CHANGEOVER COIL c/w CONDENSATE DRAIN PAN AND DRAIN CONNECTION.

PUMPS

NEW TAG	DESCRIPTION	LOCATION	SERVING	MAKE / MODEL	PERFORMANCE	NOTES
P-1	PUMP	MECHANICAL 601	ASHP-1	ARMSTRONG S69	WATER FLOW: 48 GPM HEAD: 35' WC RPM: 1800 ELECT: 1.0 HP, 208/3/60	FLANGE CONNECTION, PIPE MOUNTED
P-2	PUMP	MECHANICAL 601	B-1	ARMSTRONG S46	WATER FLOW: 35 GPM HEAD: 16' WC RPM: 1800 ELECT: 1/3 HP, 120/1/60	FLANGE CONNECTION, PIPE MOUNTED
P-3	PUMP	MECHANICAL 601	AHU-1 HEATING COIL	ARMSTRONG H51	WATER FLOW: 16 GPM HEAD: 20' WC RPM: 1800 ELECT: 1/4 HP, 120/1/60	FLANGE CONNECTION, PIPE MOUNTED
P-4	PUMP	MECHANICAL 601	RADIANT FLOOR	ARMSTRONG S57	WATER FLOW: 25 GPM HEAD: 25' WC RPM: 1800 ELECT: 3/4 HP, 208/3/60	FLANGE CONNECTION, PIPE MOUNTED
P-5	PUMP	MECHANICAL 601	HOT WATER COILS	ARMSTRONG S57	WATER FLOW: 45 GPM HEAD: 25' WC RPM: 1800 ELECT: 3/4 HP, 208/3/60	FLANGE CONNECTION, PIPE MOUNTED
P-6	PUMP	MECHANICAL 601	HEATING SYSTEM	ARMSTRONG S55	WATER FLOW: 48 GPM HEAD: 20' WC RPM: 1800 ELECT: 1/2 HP, 208/3/60	FLANGE CONNECTION, PIPE MOUNTED

MISCELLANEOUS EQUIPMENT

NEW TAG	DESCRIPTION	LOCATION	SERVING	MAKE / MODEL	PERFORMANCE	NOTES
B-1	BOILER	MECHANICAL 601	HEATING SYSTEM	VIESSMANN VITODENS 200 WB2B-105	GAS INPUT: 370 MBH GAS OUTPUT: 350 MBH WATER FLOW: 35.2 GPM EFFICIENCY: 94.5 % MAX. OPERATING PRESSURE: 60 PSI WEIGHT: 225 LBS	WALL HUNG HIGH EFFICIENCY CONDENSING BOILER c/w COAXIAL VENT KIT, ACID NEUTRALIZER KIT
ET-1	EXPANSION TANK	MECHANICAL 601	HEATING SYSTEM	TACO CBX130	TANK VOLUME: 34 GAL ACCEPTANCE VOLUME: 19 GAL HEIGHT: 38" DIAMETER: 20"	VERTICAL CONFIGURATION c/w BUTYL RUBBER BLADDER, PRE-CHARGED TO 15 PSI
ET-2	EXPANSION TANK	MECHANICAL 601	ASHP-1 SYSTEM	TACO CBX130	TANK VOLUME: 34 GAL ACCEPTANCE VOLUME: 19 GAL HEIGHT: 38" DIAMETER: 20"	VERTICAL CONFIGURATION c/w BUTYL RUBBER BLADDER, PRE-CHARGED TO 15 PSI
HSF-1	PACKAGED HYDRONIC SYSTEM FEEDER	MECHANICAL 601	ASHP-1 SYSTEM	AXIOM-SF100	WATER FLOW: 1.4 GPM VOLUME: ELECT: 0.7 AMPS, 115/1/60	PACKAGED HYDRONIC SYSTEM FEEDER c/w 45 GALLON MIXING/STORAGE TANK WITH COVER, PRESSURE PUMP, LOW LEVEL PUMP CUT-OUT AND LOW LEVEL ALARM DRY CONTACTS.
HX-1	HEAT EXCHANGER (PLATE AND FRAME)	MECHANICAL 601	HYDRONIC SYSTEM	ARMSTRONG SX SERIES	SIDE A (ASHP) (25% GLYCOL): FLOW: 48 GPM HTG MODE EWT/LWT: 105/95°F CLG MODE EWT/LWT: 45/61°F MAX PRESSURE DROP: 5 PSI SIDE B (HYDRONIC SYSTEM): FLOW: 48 GPM HTG MODE EWT/LWT: 90/100°F CLG MODE EWT/LWT: 60/50°F MAX PRESSURE DROP: 5 PSI	316 STAINLESS STEEL PLATES, MECHANICALLY FIXED NITRILE GASKETS, SIDE A – 25% GLYCOL SOLUTION, SIDE B – WATER.
BT-1 BT-2	BUFFER TANK	MECHANICAL 601	HYDRONIC SYSTEM	BRADFORD WHITE M-3-ST120R5A	STORAGE CAPACITY: 119 GAL DIAMETER: 28" HEIGHT: 62-1/2" WEIGHT: 366 LBS	INSULATED AND LINED TANK

MECHANICAL LEGEND

EQUIPMENT TYPE ABBREVIATION
EQUIPMENT DESIGNATION
EQUIPMENT TAG

ASHP – AIR SOURCE HEAT PUMP
P – PUMP
ET – EXPANSION TANK
HRV – HEAT RECOVERY VENTILATOR
ERV – ENERGY RECOVERY VENTILATOR
F – FAN
AD – MOTORIZED DAMPER
HSF – HYDRONIC SYSTEM FEEDER
AHU – AIR HANDLING UNIT
MAU – MAKE-UP AIR UNIT
FCU – FAN COIL UNIT
B – BOILER
BT – BUFFER TANK
HX – HEAT EXCHANGER
HM – HEATING MANIFOLD

AIRFLOW (L/S)
DIFFUSER DESIGNATION
DIFFUSER DESCRIPTOR (SIZE, LENGTH, NECK DIA., ETC. IN mm)
DIFFUSER TYPE. (SEE SPEC.)
25mm ACOUSTICALLY INTERNALLY LINED DUCT
50mm ACOUSTICALLY INTERNALLY LINED DUCT
FLEX DUCTING (SIZE TO MATCH DIFFUSER NECK SIZE)
F/D FIRE DAMPER
BD BALANCING DAMPER
BACKDRAFT DAMPER
AUTOMATIC DAMPER (SEE SPECS).
M FLEXIBLE DUCT CONNECTION
ELBOW WITH TURNING VANES
DUCT TRANSITION FROM RECTANGULAR TO ROUND
OUTDOOR AIR OR SUPPLY AIR DUCT SECTION
RETURN, EXHAUST, OR RELIEF DUCT SECTION
NEW DUCT
SUPPLY DUCT DOWN
SUPPLY DUCT UP
RETURN OR EXHAUST DUCT DOWN
RETURN OR EXHAUST DUCT UP
T THERMOSTAT
$ SPEED CONTROLLER OR FAN SWITCH
CHANGE IN SIZE OF DUCT OR PIPE
CONTROL VALVE
SHUT-OFF VALVE
CHECK VALVE
STRAINER
GLOBE VALVE
FS FLOW SWITCH
CIRCUIT BALANCING VALVE c/w FLOW MEASURING PORTS
CIRCUIT BALANCING VALVE
UNION OR FLANGES
FLEXIBLE PIPE CONNECTION
PRESSURE REDUCING VALVE
CIRCULATING PUMP
THERMOMETER
PRESSURE GAUGE WITH SHUT-OFF COCK & SNUBBERS
NC C NO 3-WAY CONTROL VALVE
AUTO AIR VENT
NEW SUPPLY PIPING
NEW RETURN PIPING
KEYNOTE
U/C DOOR UNDERCUT BY GENERAL CONTRACTOR.
DOOR GRILLE
GPM FLOW RATE (GPM)
HEAT TRACE

Urban Architecture • Urban Design
#401 - 134 Abbott Street, Vancouver, BC, V6B 2K4
t: 604-683-5060 e: info@urban-arts.ca

SEAL:

NOTES:

This drawing is the property of Urban Arts Architecture and may not be reproduced without their permission and unless the reproduction carries their name. All designs and all other information shown on this drawing are for use on the specified project only and shall not be used otherwise without written permission of this office.

The Contractor shall check and verify all dimensions and report any discrepancies before proceeding.

Do not scale drawings.

PROJECT NORTH
NORTH

MMM GROUP
MMM Group Limited
1045 Howe Street, Suite 700
Vancouver, BC V6Z 2A9
t 604.685.9381
f 604.683.8655
www.mmm.ca

Ref. No. 50-10-346

:Date	:Note
SEP 8/11	ISSUED FOR TENDER
AUG 29/11	ISSUED FOR B.P

ISSUED

QUEENSBOROUGH COMMUNITY CENTRE EXPANSION

MECHANICAL EQUIPMENT SCHEDULES

M-6

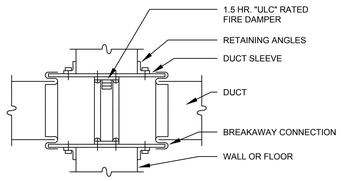

DETAIL OF FIRE DAMPERS IN DUCTS PASSING THRU FIRE SEPARATIONS

N.T.S. M/SD #3011

NOTE: "F/D" ON DRAWINGS DESIGNATES FUSIBLE LINK FIRE DAMPERS. SIZE AND WEIGHT OF RETAINING ANGLES, WEIGHT OF SLEEVES, AND INSTALLATION OF DAMPERS TO BE IN STRICT ACCORDANCE WITH THE "ULC" INSTALLATION APPROVALS FOR THE PARTICULAR DAMPER BEING INSTALLED.

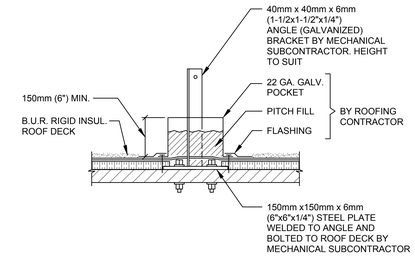

PITCH POCKETS FOR GUY WIRE BRACKETS AND ROOF DUCT SUPPORTS

N.T.S. M/SD #6005

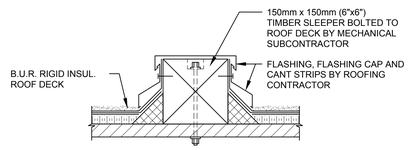

TIMBER SUPPORTS FOR ROOF MOUNTED EQUIPMENT

N.T.S. M/SD #6005

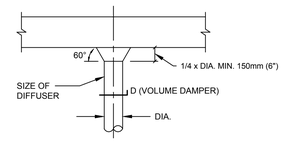

TYPICAL ROUND BRANCH DUCT TAKE-OFF

N.T.S. M/SD #3007

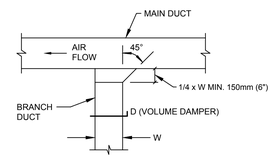

TYP. RECTANGULAR BRANCH DUCT TAKE-OFF

N.T.S. (NOT TO BE USED ON V.A.V. SYSTEMS) M/SD #3007

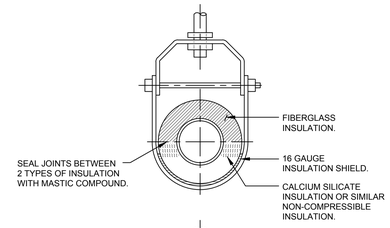

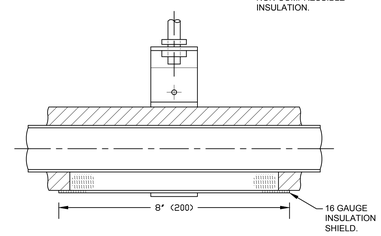

COLD WATER SYSTEMS PIPE HANGER DETAIL

N.T.S. M/SD #8011

(REFER TO SMACNA EARTHQUAKE GUIDELINES FOR PIPE BRACING DETAILS)

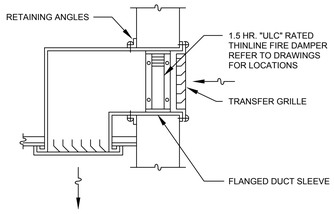

DETAIL OF TRANSFER GRILLES

N.T.S. M/SD #3012B

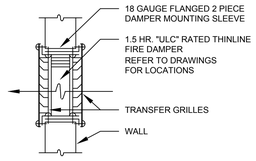

DETAIL OF WALL TRANSFER GRILLES

N.T.S. M/SD #3012

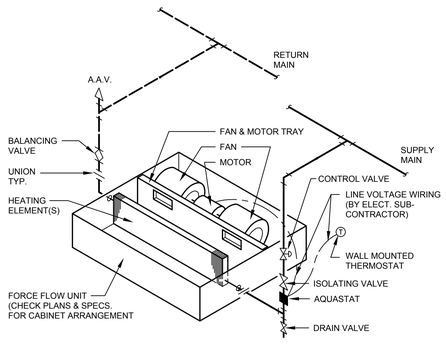

TYPICAL PIPING CONNECTIONS TO CEILING MOUNTED FORCE FLOW UNIT

N.T.S. M/SD #2011A

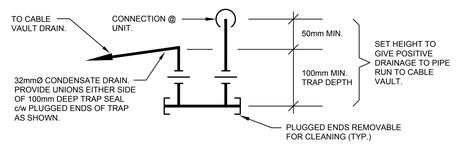

CONDENSATE TRAP DETAIL

N.T.S. M/SD #8013

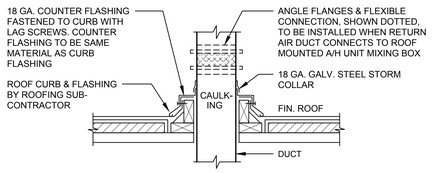

DUCTS THROUGH ROOF

N.T.S. M/SD #6002

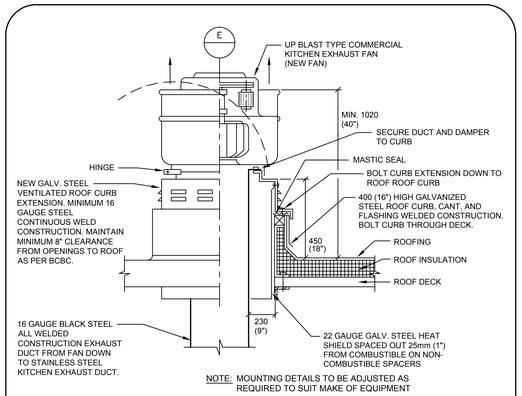

NOTE: MOUNTING DETAILS TO BE ADJUSTED AS REQUIRED TO SUIT MAKE OF EQUIPMENT

DETAIL OF KITCHEN HOOD EXHAUST FAN INSTALLATION

N.T.S. M/SD #6001AR

NEW FAN AND DUCT INSTALLATION THROUGH ROOF TO NFPA 96 CODE REQUIREMENTS

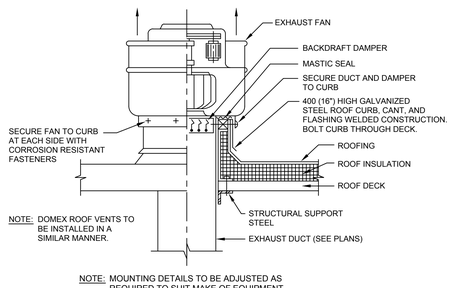

NOTE: DOMEX ROOF VENTS TO BE INSTALLED IN A SIMILAR MANNER.

NOTE: MOUNTING DETAILS TO BE ADJUSTED AS REQUIRED TO SUIT MAKE OF EQUIPMENT

DETAIL OF SPUN ALUMINUM TYPE ROOF EXHAUST FANS

N.T.S. M/SD #6001

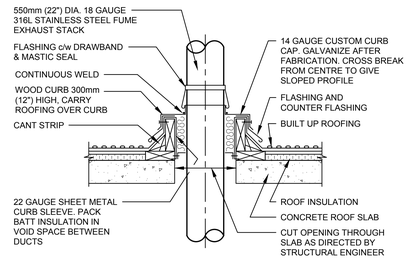

SECTION THROUGH ROOF CURB SHOWING EXHAUST STACK AND FLASHING

N.T.S. M/SD #6009

Urban arts
Architecture • Urban Design
#401 - 134 Abbott Street, Vancouver, BC, V6B 2K4
t: 604-683-5060 e: info@urban-arts.ca

SEAL:

NOTES:

This drawing is the property of Urban Arts Architecture and may not be reproduced without their permission and unless the reproduction carries their name. All designs and all other information shown on this drawing are for use on the specified project only and shall not be used otherwise without written permission of this office.

The Contractor shall check and verify all dimensions and report any discrepancies before proceeding.

Do not scale drawings.

PROJECT NORTH
NORTH

MMM GROUP
MMM Group Limited
1045 Howe Street, Suite 700
Vancouver, BC V6Z 2A9
t: 604.685.9381
f: 604.683.8655
www.mmm.ca

Ref. No. 50-10-346

iDate	iNote
SEP 8/11	ISSUED FOR TENDER
AUG 29/11	ISSUED FOR B.P

ISSUED

QUEENSBOROUGH COMMUNITY CENTRE EXPANSION

DETAILS 1

M-7

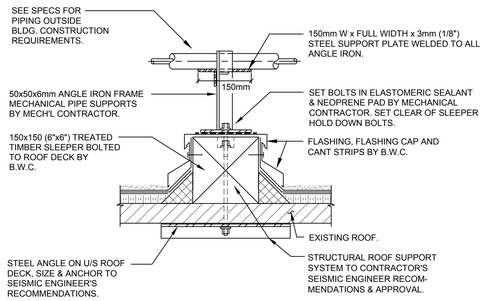

PIPE SUPPORT DETAIL ON ROOF

N.T.S. M/SD #6005A

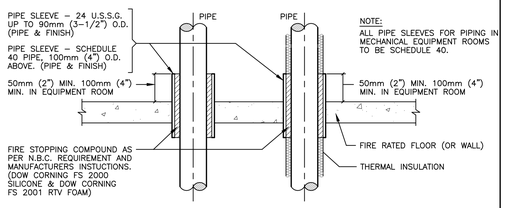

SLEEVING & FIRE STOPPING DETAIL OF PIPING PASSING THRU FIRE RATED FLOORS (OR WALLS)

N.T.S.

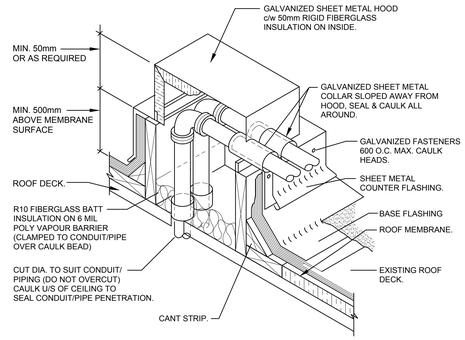

TYPICAL DETAIL OF GROUPED PIPING & CONDUIT THROUGH ROOF MEMBRANE

N.T.S.

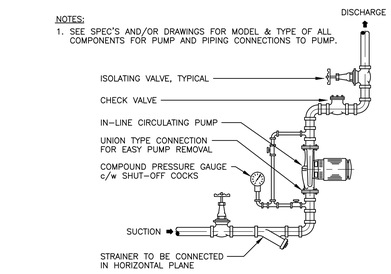

INSTALLATION DETAIL OF IN-LINE CIRCULATION PUMP

N.T.S.

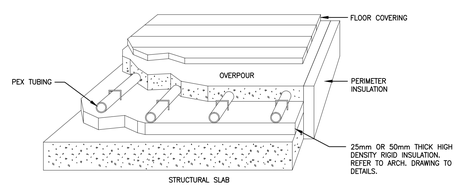

RADIANT FLOOR COOLING & HEATING SYSTEM POURED UNDERLAYMENT OVER STRUCTURAL SLAB INSTALLATION

N.T.S.

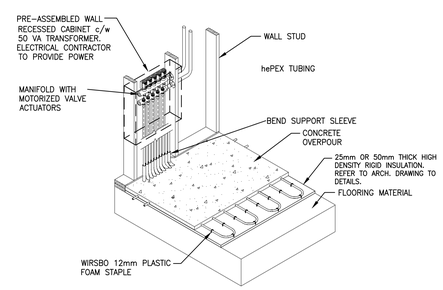

TYPICAL MANIFOLD INSTALLATION

N.T.S.

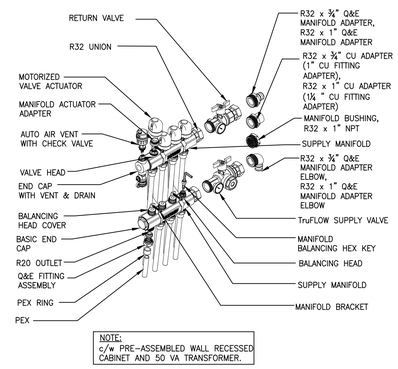

RADIANT FLOOR MANIFOLD WITH THERMAL VALVE ACTUATORS

Urban Architecture • Urban Design
#401 - 134 Abbott Street, Vancouver, BC, V6B 2K4
t: 604-683-5060 e: info@urban-arts.ca

SEAL:

NOTES:

This drawing is the property of Urban Arts Architecture and may not be reproduced without their permission and unless the reproduction carries their name. All designs and all other information shown on this drawing are for use on the specified project only and shall not be used otherwise without written permission of this office.

The Contractor shall check and verify all dimensions and report any discrepancies before proceeding.

Do not scale drawings.

MMM GROUP
MMM Group Limited
1045 Howe Street, Suite 700
Vancouver, BC V6Z 2A9
t 604.685.9381
f 604.683.8655
www.mmm.ca

Ref. No. 50-10-346

ONLINE DIRECTORIES

HNKNC.FRD-4
Fire Resistant Ducts

Page Bottom

Fire Resistant Ducts

See General Information for Fire Resistant Ducts

Design No. FRD-4

September 23, 2010

	Duct A	Duct B
Fire-resistance rating	2 h	—

(Ratings applicable for Ventilation Ducts installed with or without branches)

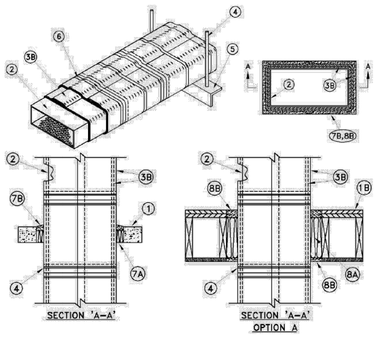

Maximum Size of Duct — 1.03 m^2 maximum area with no dimension exceeding 1 016 mm. For ducts penetrating combustible Floor/Ceiling assemblies, maximum area 0.62 m^2 with no dimension exceeding 1.22 m.

Support Spacing — 1 500 mm maximum.

Duct Use Limitation — Duct is intended for use in exhaust systems serving commercial and institutional kitchen cooking appliances.

Duct system, when constructed of the materials and in the manner described below, also meets the intent of NFPA 96, Standard for Ventilation Control and Fire Protection of Commercial Cooking Operations. Clearance to combustible materials - 0 mm.

1. **Masonry Wall or Floor —** Minimum depth or thickness as necessary for the grade of fire separation but not less than 115 mm. Normal-density or low-density concrete. Wall can also be constructed of nominal 190 mm thick concrete block laid up with mortar.

OR

(a). **Wall Assembly —** The fire-rated gypsum wallboard and steel or wood stud assembly shall be constructed of the materials and in the manner described in the individual Wall or Partition design in the ULC Fire Resistance directory.

OR

(b). **Floor/Ceiling Assembly —** The fire-rated combustible floor/ceiling assembly shall be constructed of the materials and in the manner described in the individual Floor-Ceiling design in the ULC Fire Resistance directory.

2. **Grease Duct —** Duct to be constructed in accordance with the requirements of the Standard for Ventilation Control and Fire Protection of Commerial Cooking Operations, NFPA 96. Minimum thickness of steel permitted, 1.6 mm thick carbon steel or 1.2 mm thick stainless steel; maximum size of duct 1 016 mm by 1 016 mm nominal.

* 3. **Grease Duct Insulation —** (YYETC) — See ULC Heating and Ventilating Equipment and Flammable Liquids and Gases Equipment Directory. Calcium-Magnesium-Silicate (CMS) duct wrap , 38 mm thick, installed in accordance with the manufacturer's installation instructions and shall include the following features:

(a) Copper-coated steel insulation pins (not shown), nominal 3 mm thick, minimum 102 mm long, shall be stud welded to the bottom surface of steel duct on horizontal runs and on the widest surface on vertical runs of the steel duct at 305 mm OC maximum.

(b) The interior layer of the duct wrap shall be installed around the duct with an overlap of minimum 76 mm. The second layer of blanket shall be wrapped around the first layer with overlapping joints staggered minimum 267 mm. All single and double layer joints are to be covered with minimum 102 mm wide aluminum tape.

(c) The layers of duct wrap are locked into place over the insulation pins with 25 mm by 25 mm speed clips (not shown). Banding material (Item 6), 13 mm wide and minimum 0.3 mm thick, shall be installed with a tensioning tool and spaced a minimum 267 mm OC.

(d) The performance rating of the duct assembly penetrating a masonry floor or gypsum wall assembly is dependent on the number of layers of duct wrap. The Stability, Integrity and Insulation Rating of a wrapped duct penetrating a combustible floor/ceiling assembly is maximum 1 h, independent of the number of layers of wrap.

THERMAL CERAMICS INC — FireMaster FastWrap XL, Pyroscat Duct Wrap XL

4. **Support Rod —** Steel threaded rod, nominal 13 mm minimum diameter, or for ducts not exceeding 254 mm by 406 mm (0.1 m^2 maximum area with no dimension exceeding 406 mm), steel threaded rod of nominal 10 mm diameter threaded through Cradle (Item 5) and mounted to concrete floor by:

(a) Passing through pre-drilled hole and bolting with nut and washer on top of floor, or

(b) Carbon steel or stainless steel masonry anchors, nominal 13 mm or 10 mm diameter by 50 mm long, drop-in style anchors embedded a minimum of 50 mm into concrete, or nominal 13 mm or 10 mm diameter stud wedge/expansion type anchors embedded a minimum of 60 mm into concrete.

5. **Cradle —** Steel angle, 50 mm by 50 mm by 5 mm, used to support wrapped duct at 1 500 mm OC maximum. Hung from concrete floor with Support Rods (Item 4).

For ducts not exceeding 254 mm by 406 mm (0.1 m^2 maximum area with no dimension exceeding 406 mm), steel angle 38 mm by 38 mm by 4 mm can be used.

6. **Steel Band —** Nominal 13 mm wide, 0.3 mm thick, made of carbon or stainless steel for 1 h rating and stainless steel for 2 h rating, installed on wrapped duct with tensioning tool and spaced at minimum 267 mm OC.

7. **Duct Access Door —** (Optional, Not Shown) Installed per manufacturers\' installation instructions.

DUCTMATE INDUSTRIES INC — F2 Access Door, Ultimate Access Door*

COMPONENT HARDWARE GROUP INC — Hi-Temp Access Door

THERMAL CERAMICS INC — FireMaster DuctDoor*

8a. **Duct Access Door Insulation —** (Optional, Not Shown) Fabricated from Batts and Blankets* - Nom 38 mm thick blanket totally encapsulated within foil-scrim facers, installed in three layers with minimum 25 mm overlaps on each layer and a 1.5 mm (16 gage) cover plate installed to protect outside layer in accordance with the manufacturer's installation instructions. Assembly is attached to duct on minimum two 10 mm threaded rods welded to the duct access door (3E).

THERMAL CERAMICS INC — FireMaster Fast Wrap XL or Pyroscat Duct Wrap XL.

8b. **Duct Access Door Insulation* —** (Optional, Not Shown) Assembled insulation cover plate installed in accordance with the manufacturer's installation instructions.

THERMAL CERAMICS INC — FireMaster FastDoor XL or Pyroscat FastDoor XL

Firestop System Installation

The duct shall be installed within the opening such that the annular space between the wrapped duct and the edges of the opening is maximum 76 mm. For installations in gypsum wallboard assemblies, the opening to accommodate the duct shall be framed on all sides using lengths of stud installed between vertical studs and secured to the vertical studs.

For installations in combustible floor/ceiling assemblies, only Option A shall be used. The maximum and minimum annular spaces shall be 82 and 22 mm respectively. The opening to accommodate the duct shall be framed on all sides using lengths of nominal 38 mm by minimum 240 mm wood joists.

Firestop System Installation through Non-Combustible Floor or Combustible or Non-Combustible Wall Opening

7(a). **Firestop Insulation —** (HNNZC) — (Unfaced scrap duct wrap or ULC labelled mineral wool insulation with minimum 64 kg/m^3 density compressed 50% minimum and installed into the opening to a minimum depth of 100 mm. Material to be recessed 6.4 mm from top surface of floor or both surfaces of wall to allow for the installation of sealant (Item 7b).

THERMAL CERAMICS INC — FireMaster FastWrap XL, Pyroscat Duct Wrap XL

* 7(b). **Firestop System Component —** (XHJZC) — (Caulk applied over insulation (Item 7a) to a minimum depth of 6.4 mm flush with top surface of floor or symmetrically to both surfaces of wall.

Or

Self-leveling silicone sealant, for horizontal penetrations only, applied to a minimum depth of 6.4 mm flush with the top surface of floor slab.

3M COMPANY — 3M Fire Barrier 2000 or 2000+, 3M Fire Barrier CP25WB+, 3M Fire Barrier 1003

A/D FIRE PROTECTION SYSTEMS INC — A/D FIREBARRIER Intumescent Sealant

HILTI CONSTRUCTION CHEMICALS, DIV OF

HILTI INC — FS-ONE Sealant

SPECIFIED TECHNOLOGIES INC — SpecSeal 100 or SpecSeal LCI Sealant

TREMCO INC — Fyre-Sil, Fyre-Sil S/L, TREMstop Acrylic or TREMstop Intumescent Acrylic Sealant

W R GRACE & CO - CONN — FS 900+ Sealant, FS 1900 Sealant

Option A

(Firestop System Installation Through Combustible Floor/Ceiling Opening)

8(a). **Firestop Insulation —** (HNNZC) — (Unfaced scrap duct wrap or ULC labelled mineral wool insulation with minimum 48 kg/m^3 density compressed 50% minimum and installed into the opening to a minimum depth of 240 mm. Material to be recessed from surface of floor and of ceiling to accommodate required thickness of sealant (Item 8b).

THERMAL CERAMICS INC — FireMaster FastWrap XL, Pyroscat Duct Wrap XL

* 8(b). **Firestop System Component —** (XHJZC) — (Caulk, sealant applied over insulation (Item 8a) to a minimum depth of 32 mm flush with top surface of floor and to a minimum depth of 16 mm, flush with surface of ceiling.

3M COMPANY — 3M FireBarrier CP-25WB+ Caulk

A/D FIRE PROTECTION SYSTEMS INC — A/D FIREBARRIER Intumescent Sealant

HILTI CONSTRUCTION CHEMICALS, DIV OF

HILTI INC — FS-ONE Sealant

SPECIFIED TECHNOLOGIES INC — SpecSeal 100 or SpecSeal LCI Sealant

TREMCO INC — Fyre-Sil, Fyre-Sil S/L, TREMstop Acrylic or TREMstop Intumescent Acrylic Sealant

W R GRACE & CO - CONN — FS 900+ Sealant, FS 1900 Sealant

Last Updated on 2010-09-23

Questions? Print this page Notice of Disclaimer Page Top

Copyright © 2011 Underwriters Laboratories of Canada Inc.

The appearance of a company's name or product in this database does not in itself assure that products so identified have been manufactured under ULC's Follow-Up Service. Only those products bearing the ULC Mark should be considered to be Listed and covered under ULC's Follow-Up Service. Always look for the Mark on the product.

ULC permits the reproduction of the material contained in the ULC Online Directories subject to the following conditions: 1. The Guide Information, Designs and/or Listings (files) must be presented in their entirety and in a non-misleading manner, without any manipulation of the data (or drawings). 2. The statement "Reprinted from the ULC Online Directories with permission from Underwriters Laboratories of Canada Inc." must appear adjacent to the extracted material. In addition, the reprinted material must include a copyright notice in the following format: "Copyright © 2011 Underwriters Laboratories of Canada Inc."

An independent organization working for a safer world with integrity, precision and knowledge.

:iDate	:iNote
SEP 8/11	ISSUED FOR TENDER
AUG 29/11	ISSUED FOR B.P

ISSUED

QUEENSBOROUGH COMMUNITY CENTRE EXPANSION

DETAILS 2

M-8

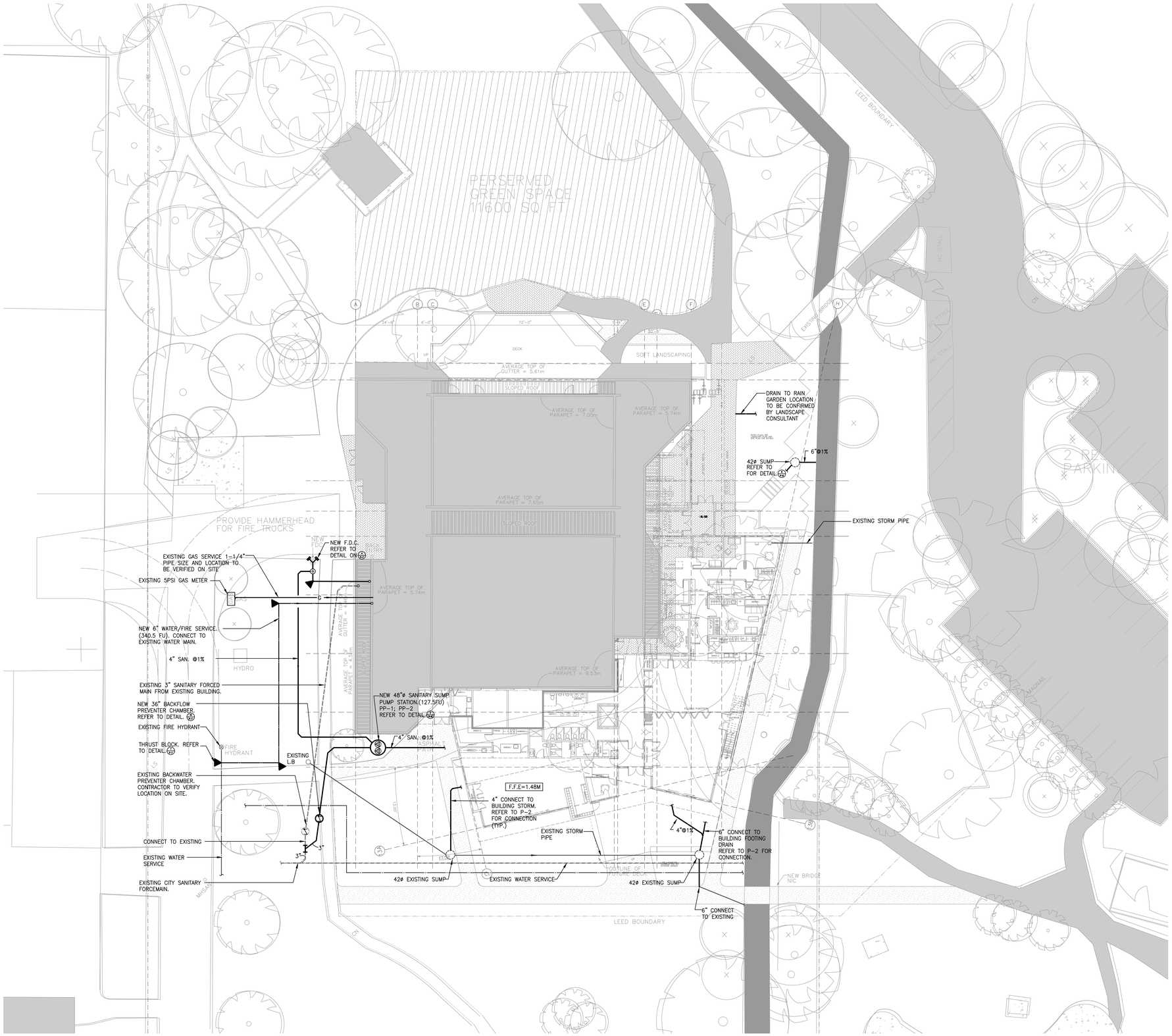

SITE PLAN

1/16" = 1'-0".

PLUMBING GENERAL NOTES:

1. ALL DRAWINGS SHALL BE READ IN CONJUNCTION WITH THE LATEST EDITION OF ARCHITECTURAL / CONSULTANTS DRAWINGS. VERIFY SERVICE SIZE, LOCATION & INVERTS BEFORE COMMENCE OF INSTALLATION.
2. ALL PLUMBING INSTALLATION SHALL COMPLY WITH LATEST EDITION OF B.C. BUILDING CODE(BCBC 2006) & CONTRACT DOCUMENTS AND SHALL MEET ALL REQUIREMENTS BY THE CITY BY-LAWS.
3. PLUMBING CONTRACTOR TO COORDINATE SCOPE OF WORK WITH GENERAL CONTRACTOR FOR EXISTING SERVICE PROTECTION.
4. REFER TO DRAWING P-2 FOR ALL SUMP'S LOCATIONS.
5. REFER TO ARCHITECTURAL'S DRAWING FOR METER READ-OUT LOCATIONS.
6. MECHANICAL CONTRACTOR TO RETAIN FIRE PROTECTION ENGINEER TO DESIGN c/w HYDRAULIC CALCULATION AND PROVIDE DRAWINGS FOR INSTALLATION OF SPRINKLER SYSTEM. DESIGN / INSTALLATION OF THE SPRINKLER SYSTEM SHALL BE FULLY COMPLY WITH THE N.F.P.A.-13, N.F.P.A.-14 .
7. GENERAL CONTRACTOR IS TO COORDINATE WITH FORTIS B.C. FOR GAS METER INSTALLATION AND PROVIDE HOUSEKEEPING PAD & ENCLOSURE PER FORTIS B.C.'S REQUIREMENTS.
8. DO NOT MEASURE DRAWINGS.

PLUMBING DRAWING LIST

NUMBER	DRAWING NAME
P-1	SITE PLAN
P-2	FOUNDATION PLAN
P-3	GROUND FLOOR PLAN
P-4	SECOND FLOOR PLAN
P-5	ROOF PLAN
P-6	SCHEMATIC/ DETAIL
P-7	SCHEMATIC/ DETAIL
P-8	EQUIPMENT SCHEDULE
FP-1	GROUND FLOOR SPRINKLER MAIN LAYOUT (REFERENCE ONLY)
FP-2	SECOND FLOOR SPRINKLER MAIN LAYOUT (REFERENCE ONLY)

PLUMBING LEGEND

SYMBOL	DESCRIPTION
	EXISTING SERVICE
	SANITARY DRAIN
	SANITARY VENT
	STORMWATER DRAIN
X	FOOTING DRAIN
5#G	NATURAL GAS (5 PSI)
	DOMESTIC COLD WATER
	DOMESTIC HOT WATER
	HOT WATER RETURN
	IRRIGATION PIPE
	CIRCULATION PUMP
	GATE VALVE
	BALANCING VALVE
	PRESSURE REDUCING VALVE
	EMERGENCY SHUT-OFF VALVE
	GAS SHUT-OFF VALVE
	HEAT TRACE & INSULATE
	HOSE BIBB
	FLOOR DRAIN
	FUNNEL FLOOR DRAIN
	ROOF DRAIN
TB	TO BELOW
FB	FROM BELOW
TA	TO ABOVE
FA	FROM ABOVE
FB	FROM BELOW
V.T.R	VENT THROUGH ROOF
V.UP	VENT UP

BUILDING LOAD

SERVICE	EXISTING *	NEW	TOTAL
WATER	110 FU	230.50 FU	340.50 FU
SANITARY	61.5 FU	127.5 FU ①	-
STORM	-	10521 L ①	-
GAS	1843 MBH	770 MBH	2613 MBH

* BASE ON FIXTURE AS SHOWN ON AS-BUILT DRAWING
NOTE 1:
SEPARATE PLUMBING SYSTEM FROM EXISTING

Urban Arts
Architecture * Urban Design
#401 - 134 Abbott Street, Vancouver, BC, V6B 2K4
t: 604-683-5060 e: info@urban-arts.ca

SEAL:

NOTES:

This drawing is the property of Urban Arts Architecture and may not be reproduced without their permission and unless the reproduction carries their name. All designs and all other information shown on this drawing are for use on the specified project only and shall not be used otherwise without written permission of this office.

The Contractor shall check and verify all dimensions and report any discrepancies before proceeding.

Do not scale drawings.

PROJECT NORTH
NORTH

MMM GROUP
MMM Group Limited
1045 Howe Street, Suite 700
Vancouver, BC V6Z 2A9
t 604.685.9381
f 604.683.8655
www.mmm.ca

Ref. No. 50-10-346

:Date	:Note
SEP 8/11	ISSUED FOR TENDER
AUG 29/11	RE-ISSUED FOR B.P
AUG 19/11	ISSUED FOR B.P

ISSUED

QUEENSBOROUGH COMMUNITY CENTRE EXPANSION

SITE PLAN PLUMBING

SCALE=1/8"-1'-0"

P-1

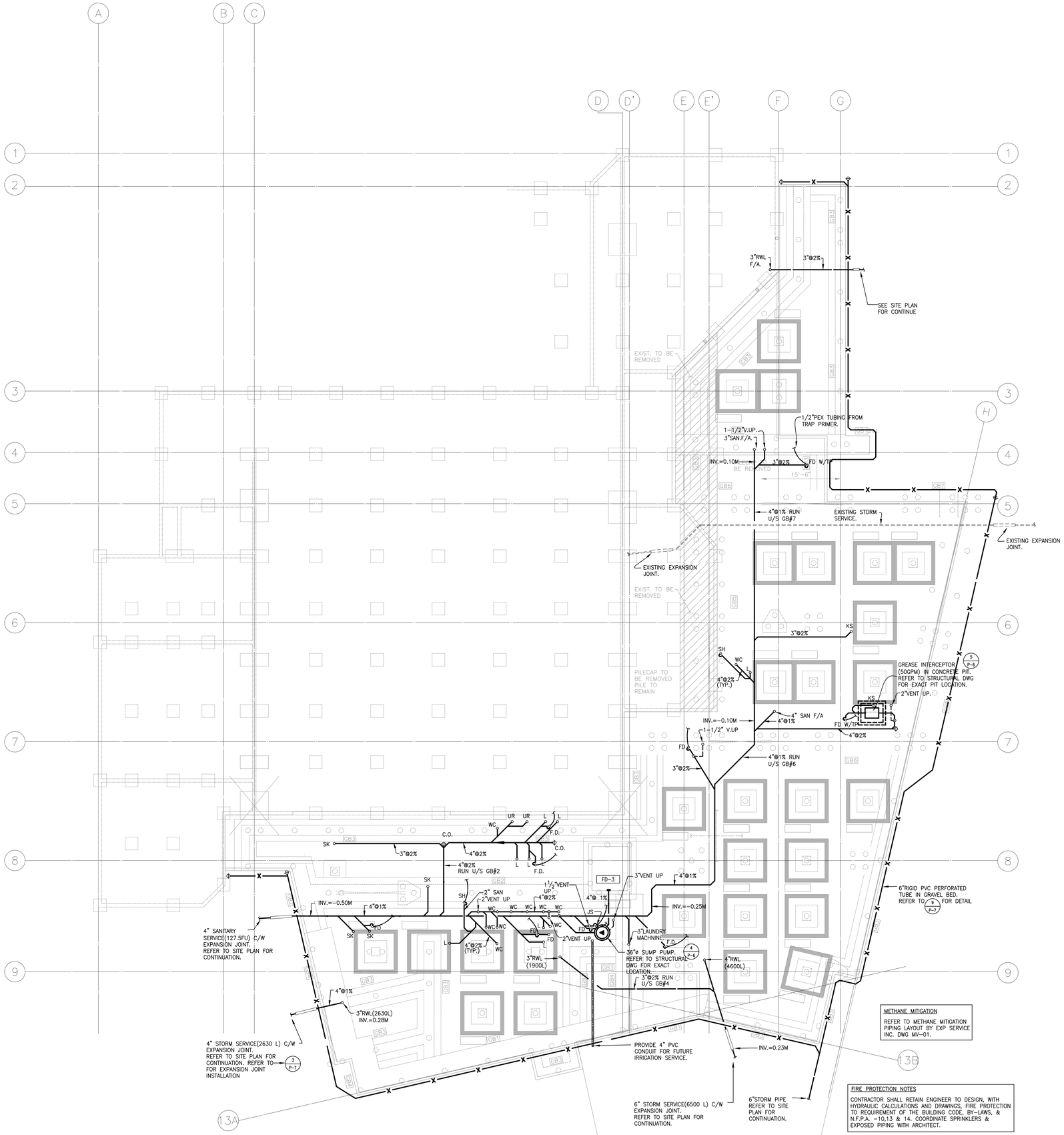

Urban arts
Architecture * Urban Design
#401 - 134 Abbott Street, Vancouver, BC, V6B 2K4
t: 604-683-5060 e: info@urban-arts.ca

SEAL:

NOTES:

This drawing is the property of Urban Arts Architecture and may not be reproduced without their permission and unless the reproduction carries their name. All designs and all other information shown on this drawing are for use on the specified project only and shall not be used otherwise without written permission of this office.

The Contractor shall check and verify all dimensions and report any discrepancies before proceeding.

Do not scale drawings.

PROJECT NORTH
NORTH

MMM GROUP
MMM Group Limited
1045 Howe Street, Suite 700
Vancouver, BC V6Z 2A9
t: 604.685.9381
f: 604.683.8655
www.mmm.ca

Ref. No. 50-10-346

:Date	:Note
SEP 8/11	ISSUED FOR TENDER
AUG 29/11	RE-ISSUED FOR B.P
AUG 19/11	ISSUED FOR B.P

ISSUED

QUEENSBOROUGH COMMUNITY CENTRE EXPANSION

FOUNDATION PLAN PLUMBING

SCALE=1/8"-1'-0"

P-2

1. REMOVE EXISTING ROOF DRAIN AND HATCHED PIPE AS SHOWN. VERIFY ROOF DRAIN LOCATION ON SITE.
2. EXISTING RWL TO REMAIN CAP OFF PIPE.
3. REMOVE EXISTING HOSE BIB AND REINSTALL UPON COMPLETION OF WALL RENOVATION EXTEND PIPE TO SUIT NEW WALL THICKNESS
4. SUMP PUMP CONTROL PANEL. COORDINATE FINAL LOCATION ON SITE. WHERE CONTROL PANELS ARE LOCATED EXTERIOR, PROVIDE WATER PROOF, LOCKABLE ENCLOSURE.

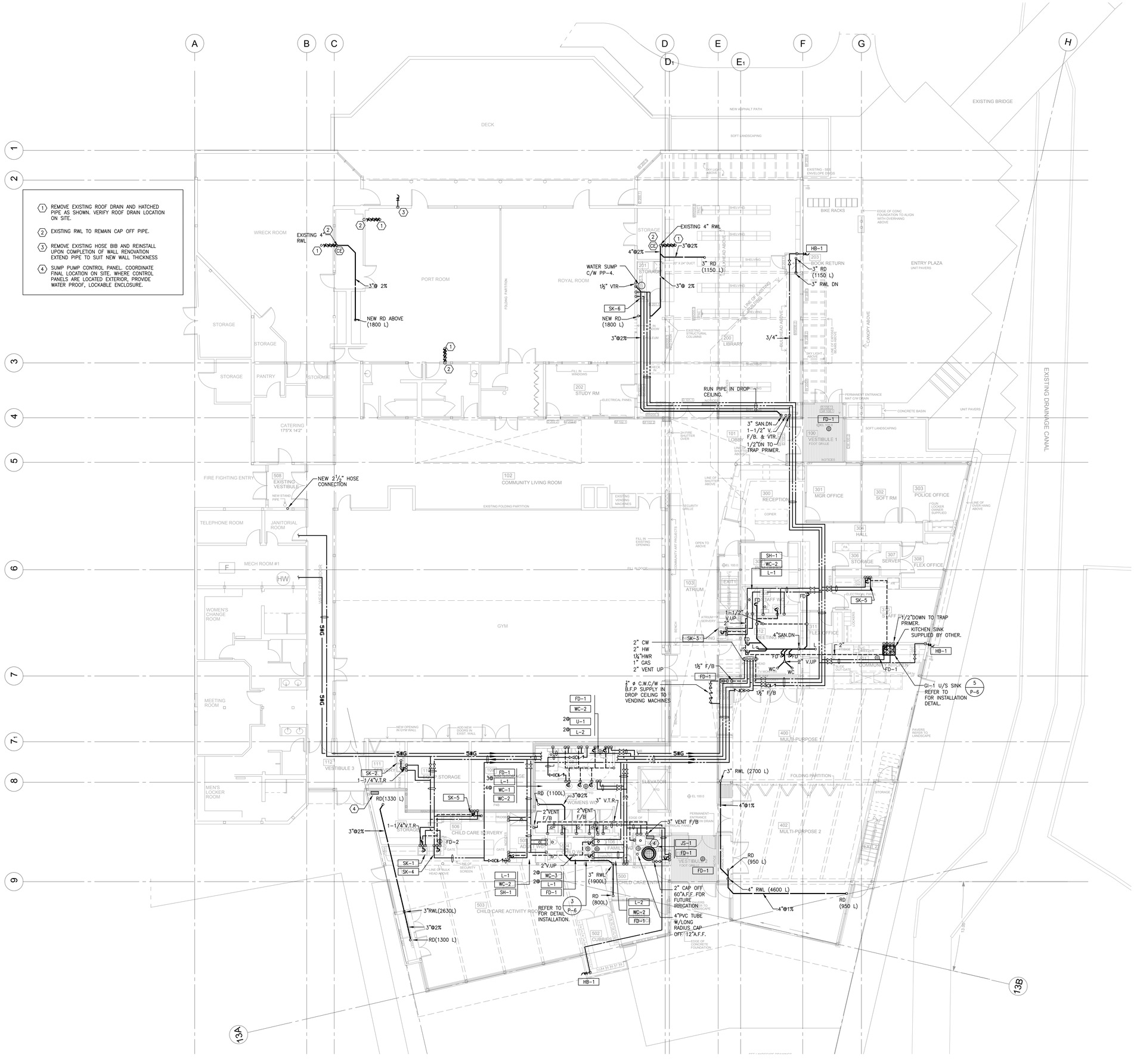

Urban arts
Architecture * Urban Design
#401 - 134 Abbott Street, Vancouver, BC, V6B 2K4
t: 604-683-5060 e: info@urban-arts.ca

SEAL:

NOTES:

This drawing is the property of Urban Arts Architecture and may not be reproduced without their permission and unless the reproduction carries their name. All designs and all other information shown on this drawing are for use on the specified project only and shall not be used otherwise without written permission of this office.

The Contractor shall check and verify all dimensions and report any discrepancies before proceeding.

Do not scale drawings.

PROJECT NORTH
NORTH

MMM GROUP
MMM Group Limited
1045 Howe Street, Suite 700
Vancouver, BC V6Z 2A9
t: 604.685.9381
f: 604.683.8655
www.mmm.ca

Ref. No. 50-10-346

iDate	:Note
SEP 8/11	ISSUED FOR TENDER
AUG 29/11	RE-ISSUED FOR B.P
AUG 19/11	ISSUED FOR B.P

ISSUED

QUEENSBOROUGH COMMUNITY CENTRE EXPANSION

GROUND FLOOR PLAN PLUMBING

P-3

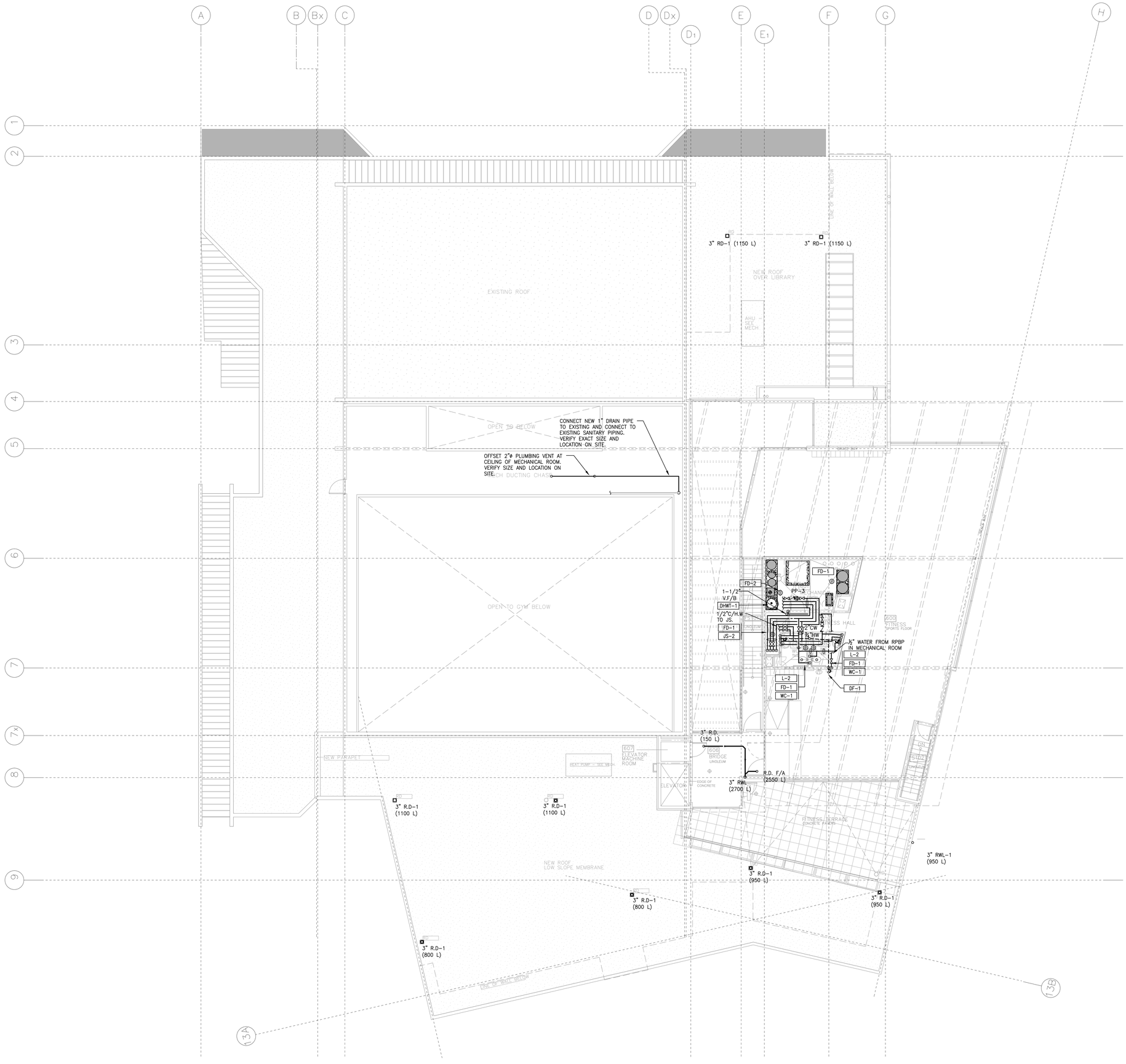

Urban arts
Architecture * Urban Design
#401 - 134 Abbott Street, Vancouver, BC, V6B 2K4
t: 604-683-5060 e: info@urban-arts.ca

SEAL:

NOTES:

This drawing is the property of Urban Arts Architecture and may not be reproduced without their permission and unless the reproduction carries their name. All designs and all other information shown on this drawing are for use on the specified project only and shall not be used otherwise without written permission of this office.

The Contractor shall check and verify all dimensions and report any discrepancies before proceeding.

Do not scale drawings.

PROJECT NORTH
NORTH

MMM GROUP
MMM Group Limited
1045 Howe Street, Suite 700
Vancouver, BC V6Z 2A9
t: 604.685.9381
f: 604.683.8655
www.mmm.ca

Ref. No. 50-10-346

iDate	iNote
SEP 8/11	ISSUED FOR TENDER
AUG 29/11	RE-ISSUED FOR B.P
AUG 19/11	ISSUED FOR B.P

ISSUED

QUEENSBOROUGH COMMUNITY CENTRE EXPANSION

SECOND FLOOR PLAN PLUMBING

SCALE=1/8"-1'-0"

P-4

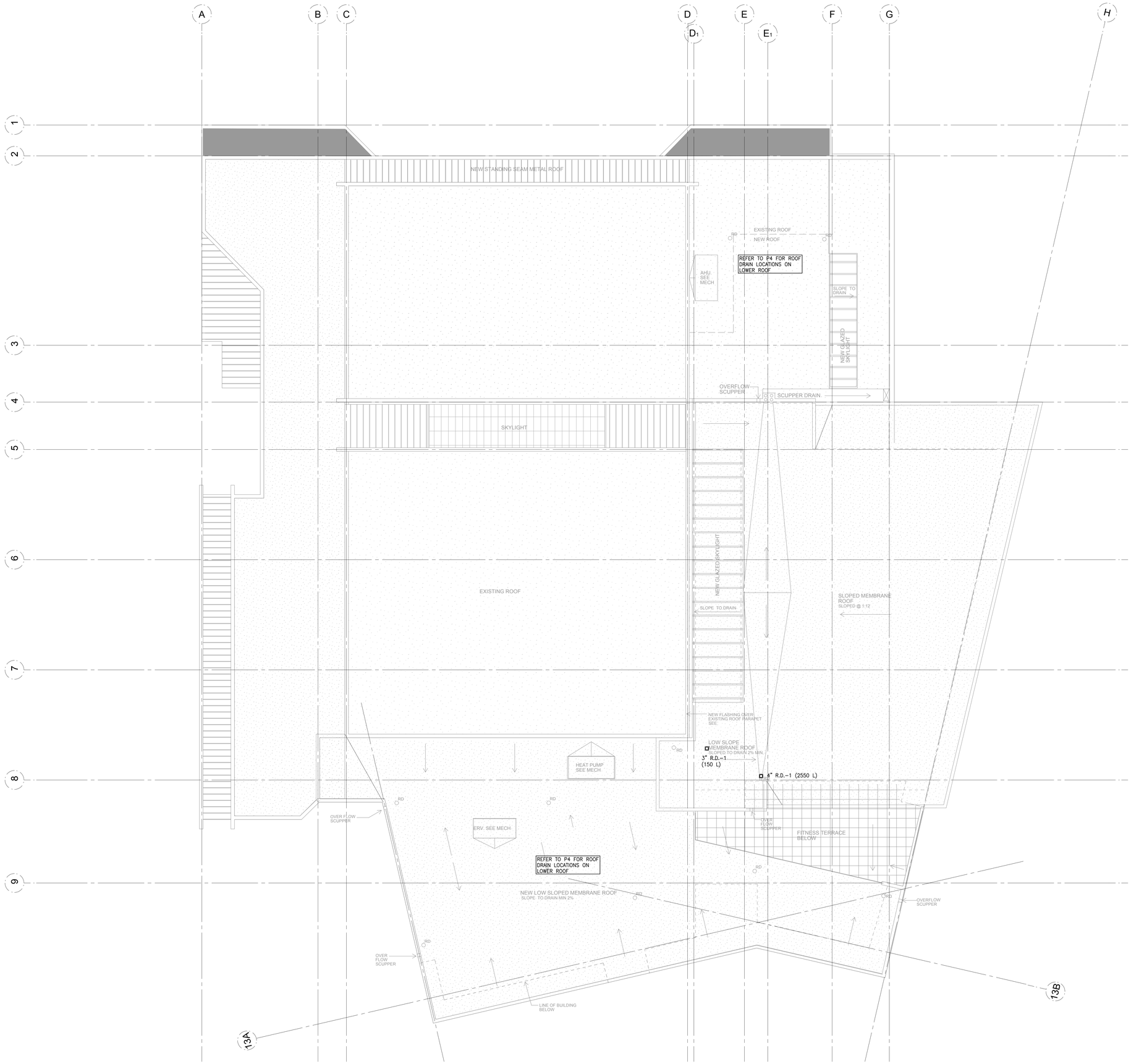

Urban arts
Architecture * Urban Design
#401 - 134 Abbott Street, Vancouver, BC, V6B 2K4
t: 604-683-5060 e: info@urban-arts.ca

SEAL:

NOTES:

This drawing is the property of Urban Arts Architecture and may not be reproduced without their permission and unless the reproduction carries their name. All designs and all other information shown on this drawing are for use on the specified project only and shall not be used otherwise without written permission of this office.

The Contractor shall check and verify all dimensions and report any discrepancies before proceeding.

Do not scale drawings.

PROJECT NORTH
NORTH

MMM GROUP
MMM Group Limited
1045 Howe Street, Suite 700
Vancouver, BC V6Z 2A9
t: 604.685.9381
f: 604.683.8655
www.mmm.ca

Ref. No. 50-10-346

:Date	:Note
SEP 8/11	ISSUED FOR TENDER
AUG 29/11	RE-ISSUED FOR B.P
AUG 19/11	ISSUED FOR B.P

ISSUED

QUEENSBOROUGH COMMUNITY CENTRE EXPANSION

ROOF FLOOR PLAN PLUMBING

SCALE=1/8"-1'-0"

P-5

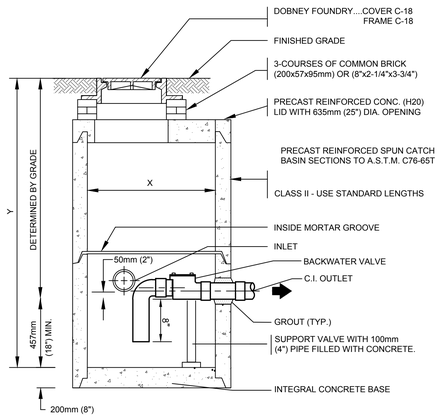

Y	X
LESS THAN 4' (1200mm)	30" (750mm) MIN.
4' (1200mm) TO 8' (2400mm)	42" (1000mm) MIN.
GREATER THAN 8' (2400mm)	60" (1500mm) MIN.

6 / P-1

JUNCTION BOX FOR FOOTING DRAIN

N.T.S. P/SD #2002A

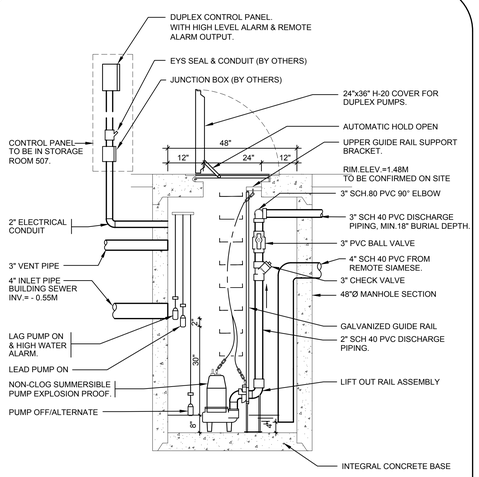

SECTIONAL ELEVATION

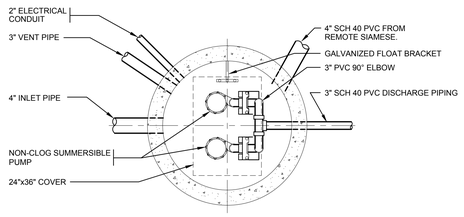

PLAN VIEW

2 / P-1

SANITARY PUMP SUMP DETAIL

N.T.S. P/SD #1005A

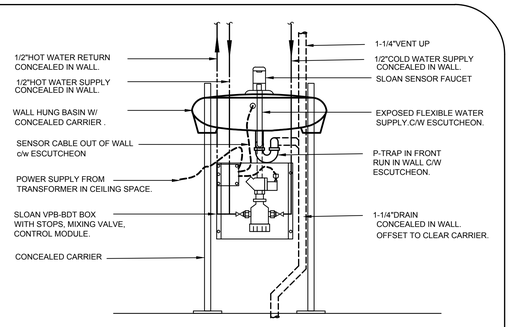

1 / –

DETAIL OF WALL HUNG BASIN

N.T.S.

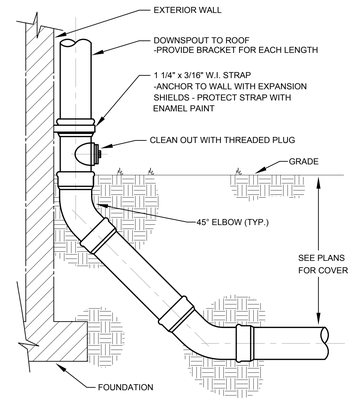

7 / P-1

DOWNSPOUT SHOE

N.T.S. P/SD #1022

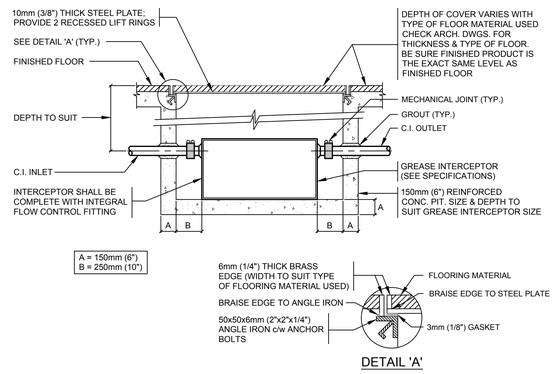

DETAIL 'A'

5 / P-2

GREASE INTERCEPTOR DETAIL

N.T.S. P/SD #1004

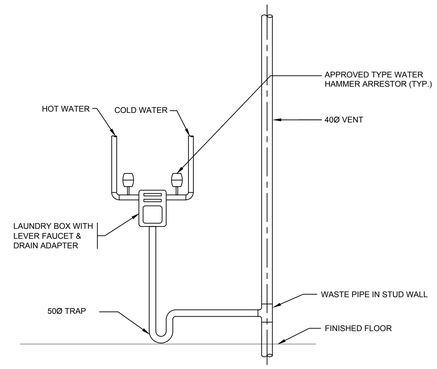

8 / P-3

CLOTHES WASHER CONNECTION DETAIL

N.T.S. P/SD #1025B

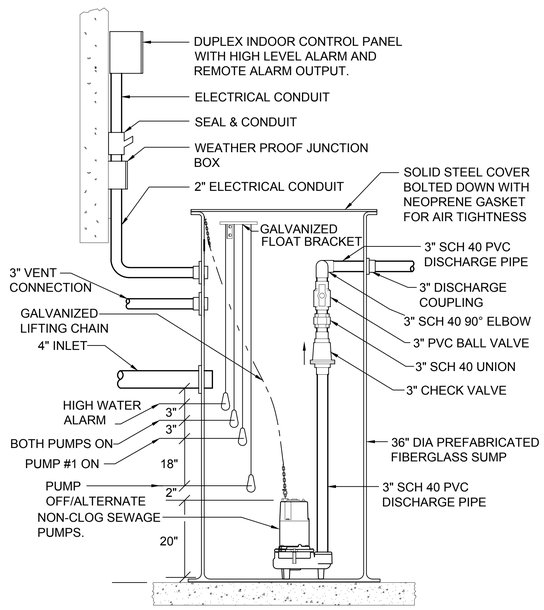

4 / P-2

SIMPLEX SANITARY PUMP SUMP

N.T.S.

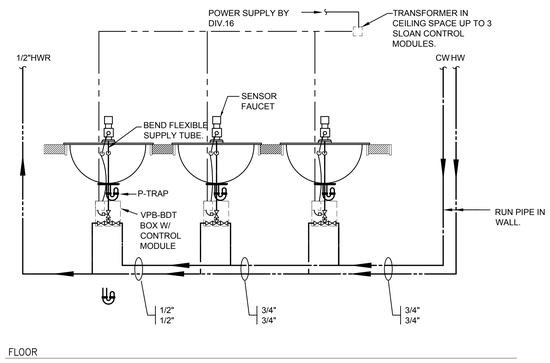

3 / –

WASHROOM COUNTER LAVATORY DETAIL

N.T.S.

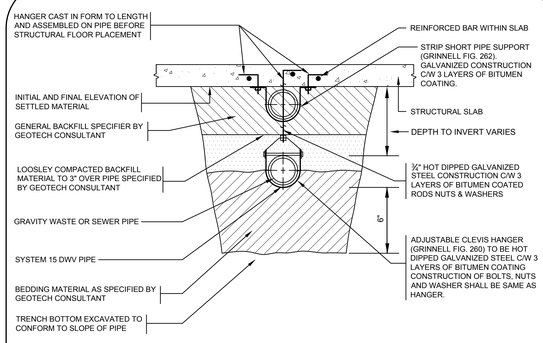

DETAIL OF PIPE SUPPORT UNDER STRUCTURAL SLAB-ON-GRADE

N.T.S.

9 / P-2

Urban Architecture • Urban Design
#401 - 134 Abbott Street, Vancouver, BC, V6B 2K4
t: 604-683-5060 e: info@urban-arts.ca

SEAL:

NOTES:

This drawing is the property of Urban Arts Architecture and may not be reproduced without their permission and unless the reproduction carries their name. All designs and all other information shown on this drawing are for use on the specified project only and shall not be used otherwise without written permission of this office.

The Contractor shall check and verify all dimensions and report any discrepancies before proceeding.

Do not scale drawings.

PROJECT NORTH
NORTH

MMM GROUP
MMM Group Limited
1045 Howe Street, Suite 700
Vancouver, BC V6Z 2A9
t: 604.685.9381
f: 604.683.8655
www.mmm.ca

Ref. No. 50-10-346

:Date	:Note
SEP 8/11	ISSUED FOR TENDER
AUG 29/11	RE-ISSUED FOR B.P
AUG 19/11	ISSUED FOR B.P

ISSUED

QUEENSBOROUGH COMMUNITY CENTRE EXPANSION

SCHEMATIC /DETAILS PLUMBING

SCALE=1/8"-1'-0"

P-6

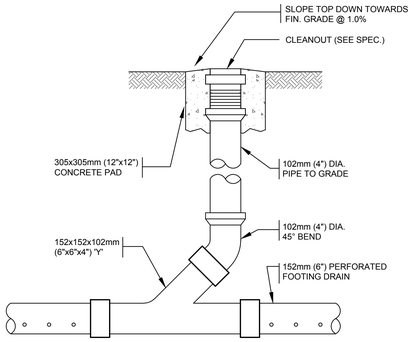

8 / P–2

TYPICAL FOOTING DRAIN CLEANOUT

N.T.S. P/SD #2009

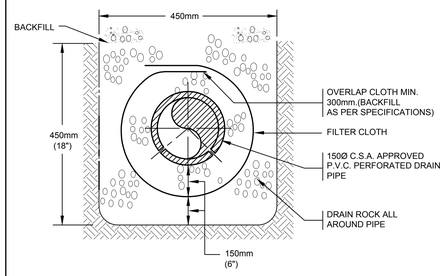

9 / P–2

SUBSOIL & FOOTING DRAIN DETAIL

N.T.S. P/SD #2020

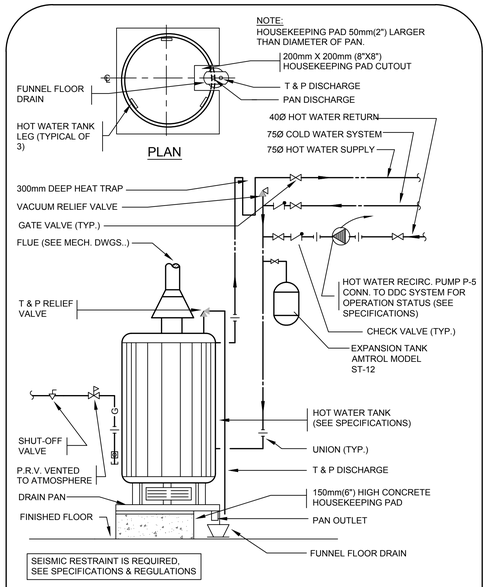

1 / P–4

HOT WATER TANK DETAIL

N.T.S. P/SD #3007A

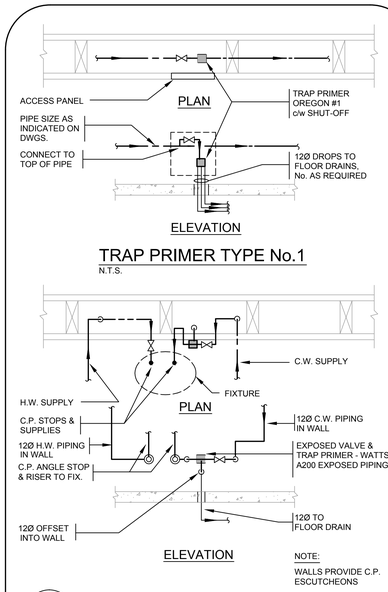

TRAP PRIMER TYPE No.1

N.T.S.

2 / –

TRAP PRIMER TYPE No.2

N.T.S. P/SD #3011

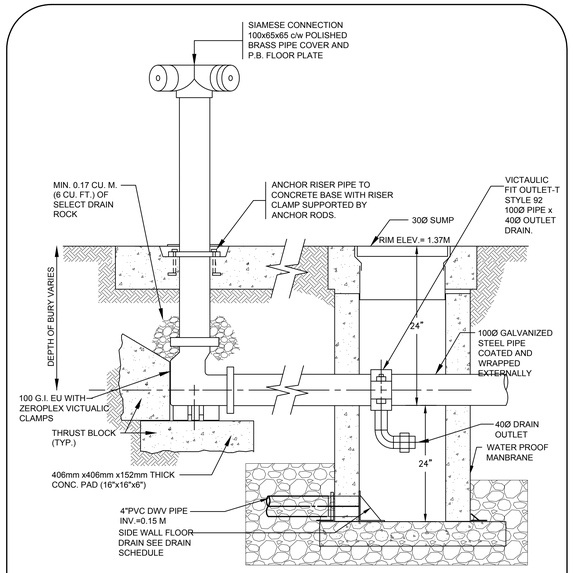

4 / P–1

REMOTE SIAMESE CONNECTION DETAIL

N.T.S. P/SD #4011

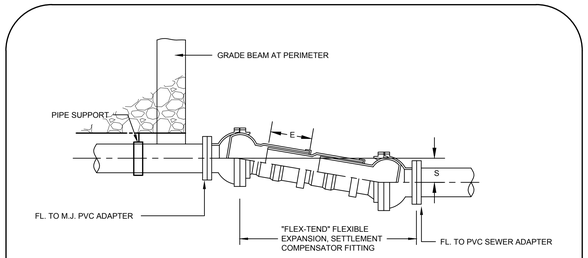

3 / P–2

DETAIL OF FLEXIBLE UTILITY CONNECTION

N.T.S.

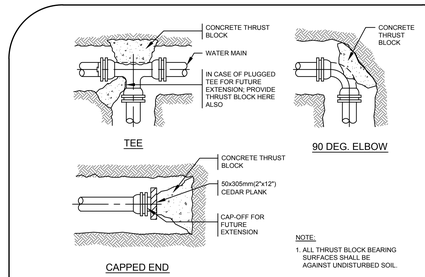

7 / P–1

THRUST BLOCK DETAIL

N.T.S. P/SD #4004

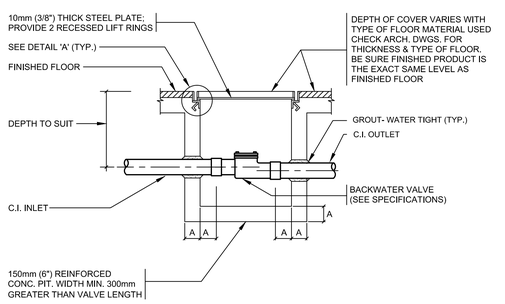

A = 150mm (6")

NOTE: THIS SUMP SHALL BE USED TO A MAX. DEPTH OF 600mm TO PIPE INVERT.

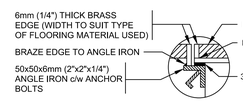

DETAIL 'A'

10 / P–1

BACKWATER SUMP DETAIL

N.T.S. P/SD #1010

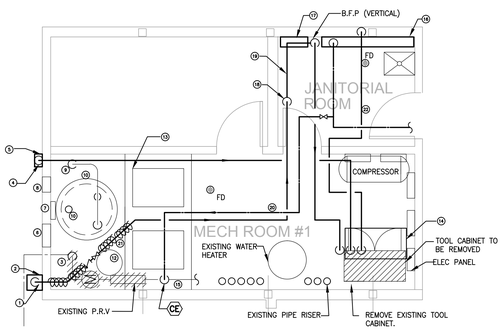

DETAIL KEYNOTES:

1. NEW 6"ø COMBINE WATER/FIRE SERVICE. RUN PIPE IN FURRING BY OTHER. PIPE TO BE HEAT TRACED AND INSULATED.
2. FURRING WALL BY OTHER FOR 6"ø WATER SERVICE
3. REMOVE EXISTING WATER SERVICE & P.R.V, CAP OFF EXISTING WATER SERVICES AT FLOOR.
4. 4"ø PIPE FROM F.D.C RUN PIPE IN FURRING BY OTHER
5. FURRING WALL BY OTHER FOR 4"ø PIPE FROM F.D.C
6. 18"x18" OPENING 18" A.F.F
7. SUMP CONTROL PANEL
8. 12"x12" OPENING 18" A.F.F
9. EXISTING SAN DISCHARGE
10. EXISTING SUMP VENT
11. 48"ø SAN. SUMP
12. 20"ø EXPANSION TANK
13. EXISTING BOILER (TYP OF 2) ON HOUSE KEEPING PAD
14. 48"x24" SPACE FOR DRY SPRINKLER VALVE AND WET SPRINKLER PIPE
15. EXISTING 2"ø WATER PIPE
16. NEW METER BELOW P.R.V ABOVE
17. EXISTING LADDER TO ROOF HATCH
18. NEW 6"ø WATER SERVICE DROP TO FLOOR LEVEL
19. RUN PIPE UNDER PLAT FORM BY OTHER.
20. 2" CONNECTION TO EXISTING AS SHOWN
21. HEAT TRACE WATER VERTICAL RISER AND PIPE AS SHOWN
22. 2–1/2" PIPE TO HOSE CONNECTION

5 / P–3

MECHANICAL ROOM DETAILS

1/4"=1'-0"

DETAIL KEYNOTES:

1. WET-PIPE SPRINKLER SUPPLY TO SECOND FLOOR
2. WET-PIPE SPRINKLER SUPPLY TO GROUND FLOOR
3. NOT IN USE
4. DRY-PIPE SPRINKLER SUPPLY TO COMBUSTIBLE CANOPIES
5. WET-PIPE VALVE STATION
6. DRY-PIPE VALVE STATION
7. REMOTE SIAMESE CONNECTION. SEE DETAIL ON P-7.
8. 6"Ø VERTICAL LOW HEAD LOSS DOUBLECHECK VALVE ASS'Y
9. 4"Ø DOMESTIC C.W. SUPPLY
10. 4"Ø PRV VALVE WITH LOW FLOW BY-PASS
11. 4"Ø STAINER C/W BLOW OFF VALVE
12. 3"Ø WATER METER C/W REMOTE READER
13. 6"Ø COMBINED WATER SERVICE
14. 2"Ø CONNECT TO EXISTING WATER SERVICE
15. 2-1/2"Ø TO HOSE CONNECTION.
16. WET-PIPE SPRINKLER SUPPLY TO WATER CURTAIN AS INDICATED IN CODE REPORT
17. FLOW SWITCH

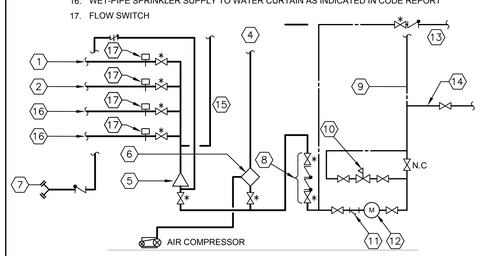

* DENOTES SUPERVISORY SWITCH AT EVERY FIRE SUPPLY VALVE

6 / P–3

DETAIL OF WATER ENTRY STATION

N.T.S. P/SD #3034

Urban Architecture • Urban Design
#401 - 134 Abbott Street, Vancouver, BC, V6B 2K4
t: 604-683-5060 e: info@urban-arts.ca

SEAL:

NOTES:

This drawing is the property of Urban Arts Architecture and may not be reproduced without their permission and unless the reproduction carries their name. All designs and all other information shown on this drawing are for use on the specified project only and shall not be used otherwise without written permission of this office.

The Contractor shall check and verify all dimensions and report any discrepancies before proceeding.

Do not scale drawings.

PROJECT NORTH
NORTH

MMM GROUP
MMM Group Limited
1045 Howe Street, Suite 700
Vancouver, BC V6Z 2A9
t: 604.685.9381
f: 604.683.8655
www.mmm.ca

Ref. No. 50-10-346

:Date	:Note
SEP 8/11	ISSUED FOR TENDER
AUG 29/11	RE–ISSUED FOR B.P
AUG 19/11	ISSUED FOR B.P

:ISSUED

QUEENSBOROUGH COMMUNITY CENTRE EXPANSION

DETAILS PLUMBING

SCALE=1/8"–1'–0"

P-7

DRAINS AND HOSE BIBBS SCHEDULE

TAG	SERVICE	DESCRIPTION
RD-1	CONVENTIONAL ROOF (TPO MEMBRANE ROOFING)	LACQUERED CAST IRON ROOF DRAIN WITH ANCHOR FLANGE, CAST IRON MEMBRANE CLAMP WITH INTEGRAL GRAVEL STOP, ADJUSTABLE CAST IRON EXTENSION FLANGE, UNDERDECK CLAMP AND SELF-LOCKING POLYDOME STRAINER. MIFAB R-1220-EU, ZURN Z-100-ERC, WATTS RD-100-BED.
FD-1	FINISHED AREAS, PUBLIC WASHROOMS	EPOXY COATED CAST IRON FLOOR DRAIN WITH ANCHOR FLANGE, REVERSIBLE MEMBRANE CLAMP WITH WEEP HOLES, 3" DIA.TRAP PRIMER CONNECTION ADJUSTABLE NICKEL BRONZE STRAINER. MIFAB F1100C, ZURN ZXN-415-A, WATTS FD 100-C-A6-1
FD-2	MECHANICAL EQUIPMENT	EPOXY COATED CAST IRON FUNNEL FLOOR DRAIN, ADJUSTABLE POLISHED NICKEL BRONZE STRAINER AND 3¼" X 8" OVAL FUNNEL, TRAP PRIMER CONNECTION MIFAB F1100-EG, ZURN ZN-211-BF, WATTS FD-100-C-EG-1
FD-3	ELEVATOR PIT, ELEC. PULL PIT	SIDE OUTLET /w BACKWATER VALVE. DURA-COATED CAST IRON BODY, BRONZE VALVE ASSEMBLY AND SECURED SLOTTED GRATE. ZURN Z-629 OR EQUAL.
HB-1	EXTERIOR	ENCASED NON-FREEZE WALL MOUNTED HOSE BIBB 3/4" MALE CONNECTION C/W ANTI-SIPHON AND VANDAL RESISTANT INTEGRAL VACUUM BREAKER. SATIN FINISHED NICKEL BROZNE BOX WITH HINGED LOCKING COVER. MIFAB MHY-20 OR EQUAL.
GI-1	COMMUNITY KITCHEN	ACID RESISTANT COATED INTERIOR AND EXTERIOR FABRICATED STEEL GREASE INTERCEPTOR (50GPM). INTERCEPTOR SHALL HAVE INTERNAL AIR RELIEF BY-PASS, CLEAN-OUT PLUG AND VISIBLE DOUBLE WALL TRAP SEAL WITH REMOVABLE PRESSURE EQUALIZING/ FLOW DIFFUSING INLET BAFFLE. GASKET NON-SKID SECURED COVER WITH RECESSED LIFT HANDLES C/W FLOW CONTROL FITTING. INTERCEPTOR SHALL EQUIPED WITH USER NOTIFICATION SYSTEM WITH SENSOR BOX, GREASE LEVEL SENSOR, AND DISPLAY BOX, AUDIO ALARM, AND JUNCTION BOX FOR 120V. ZURN Z-1170-UN OR EQUAL

PLUMBING FIXTURE SCHEDULE

TAG	PART	DESCRIPTION	MAKE	MODEL	NOTES	WATER USE(LPF) HI	WATER USE(LPF) LOW
WC-1	WATER CLOSET	REGULAR APPLICATION	AMERICAN STANDARD	MADERA FLOWISE (15"HT)	VITREOUS CHINA FLOOR MOUNTED WATER CLOSET, ELONGATED BOWL, HIGH EFFICIENCY LOW CONSUMPTION, TOP SPUD CONNECTION. C/W SLOAN ELETRONIC FLUSHOMETER.	6.0	4.2
	FLUSH VALVE		SLOAN	DUAL FLUSH WES-111			
	SEAT		BEMIS	1955SSCT			
WC-2	WATER CLOSET	HC APPLICATION	AMERICAN STANDARD	MADERA FLOWISE (16.5"HT)	VITREOUS CHINA FLOOR MOUNTED WATER CLOSET, ADA ELONGATED BOWL, HIGH EFFICIENCY LOW CONSUMPTION, TOP SPUD CONNECTION. C/W SLOAN ELETRONIC FLUSHOMETER.	6.0	4.2
	FLUSH VALVE		SLOAN	DUAL FLUSH WES-115			
	SEAT		BEMIS	1950SS			
WC-3	WATER CLOSET	KID POTTY	AMERICAN STANDARD	BABY DEVORO	VITREOUS CHINA FLOOR MOUNTED WATER CLOSET.	6.0	4.2
	FLUSH VALVE		SLOAN	DUAL FLUSH WES-111			
	SEAT		CENTOCO	2300			
L-1	LAVATORY	COUNTER TOP	AMERICAN STANDARD	CADET	UNIVERSAL ACCESS COUNTERTOP LAVATORY, SINGLE HOLE ON CENTER, ELECTRONIC FAUCET C/W BELOW DECK THERMOSTAT MIXING VALVE, SOLINOID CONTROL VALVE, COMMON TRANSERFOR UP FOR 3 FAUCSTS.	1.9LPM	
	FAUCET		SLOAN	ETF-600			
	DRAIN		MCGUIRE				
	CARRIER						
L-2	LAVATORY	WALL MOUNTED	AMERICAN STANDARD	MURRO	WALL MOUNTED, BARRIER FREE LAVATORY, SINGLE HOLE ON CENTER, ELECTRONIC FAUCET C/W BELOW DECK THERMOSTAT MIXING VALVE, SOLINOID CONTROL VALVE, COMMON TRANSERFOR UP FOR 3 FAUCSTS.	1.9LPM	
	FAUCET		SLOAN	ETF-600			
	DRAIN		MCGUIRE				
	CARRIER		ZURN	WATTS WCA-411			
SK-1	SINK	COUNTER TOP SINK	KINDRED	LBS7308 P-1/3	18 GAUGE STAINLESS STEEL, SINGLE COMPARTEMENT SINK WITH FAUCET LEDGE, 3 HOLES - 8" CENTER, MANUAL FAUCET	5.7LPM	
	FAUCET		AMERICAN STANDARD	RELIANT F15			
	DRAIN						
	SUPPLY						
SK-2	SINK	COUNTER TOP SINK	KINDRED	LBD6410P-1/3	18 GAUGE STAINLESS STEEL, DOUBLE COMPARTEMENTS SINK WITH FAUCET LEDGE, 3 HOLES - 8" CENTER, MANUAL FAUCET	5.7LPM	
	FAUCET		AMERICAN STANDARD	RELIANT F15			
	DRAIN						
	SUPPLY						
SK-3	SINK	COUNTER TOP SINK	KINDRED	ALBS4006P-1/3	18 GAUGE STAINLESS STEEL, SINGLE COMPARTEMENTS SINK WITH FAUCET LEDGE,3 HOLES - 8" CENTER, MANUAL FAUCET, COUNTER MOUNTED BUBBLER.	5.7LPM	
	FAUCET		AMERICAN STANDARD	RELIANT F15			
	DRAIN		HAWS	5060 LF			
	SUPPLY						
SK-4	SINK	COUNTER TOP SINK	KINDRED	LBS4408P-1/3	18 GAUGE STAINLESS STEEL, SINGLE COMPARTEMENTS SINK WITH FAUCET LEDGE, 3 HOLES - 8" CENTER, MANUAL FAUCET	5.7LPM	
	FAUCET		AMERICAN STANDARD	RELIANT F15			
	DRAIN						
	SUPPLY						
SK-5	SINK	COUNTER TOP SINK	KINDRED	QCLA 2233R/8	18 GAUGE STAINLESS STEEL, DOUBLE COMPARTEMENTS SINK WITH FAUCET LEDGE, 3 HOLES - 8" CENTER, MANUAL FAUCET. C/W FITTING FOR DISHWASHER CONNECTION.	5.7LPM	
	FAUCET		AMERICAN STANDARD	RELIANT PULL SPRAY			
	DRAIN						
	SUPPLY						
SK-6	SINK	COUNTER TOP SINK	KINDRED	LBS4408P-1/3	18 GAUGE STAINLESS STEEL, DOUBLE COMPARTEMENTS SINK WITH FAUCET LEDGE, 4 HOLES - 8" CENTER, MANUAL FAUCET. C/W WATER BOX AND BOOSTER PUMP PACKAGE. ALARM UPON HI-WATER LEVEL.	5.7LPM	
	FAUCET		AMERICAN STANDARD	RELIANT F15			
	DRAIN		HAMLET GARNEAU	W-BOX SYSTEM			
	SUPPLY						
SH-1	SHOWER	SHOWER CABINET					
	TRIM		SYMMONS	1-117-FS			
	DRAIN		FLOOR DRAIN	FD-1(SEE DRAIN SCHEDULE)			
JS-1	MOP SINK	FLOOR MOUNTED	FIAT	MSB 2424	MOLDED STONE MOP SINK, FLOOR MOUNTED WITH 10" WALL HIGHT, 1"WIDE SHOULDER. WALL MOUNTED FAUCET CHROME PLATED WITH VACUUM BREAKER, INTEGRAL STOPS, DOME STRAINER AND STAINLESS STEEL LINT BASKET.	5.7LPM	
	FAUCET		DELTA	28T2383			
	STRAINER		FIAT	1453BB			
JS-2	MOP SINK	FLOOR MOUNTED	FIAT	MSB 3624			
	FAUCET		DELTA	28T2383			
	STRAINER		FIAT	1453BB			
U-1	URINAL	WALL MOUNTED	AMERICAN STANDARD	WASHBROOK	VITREOUS CHINA, ULTRA HIGH EFFICIENCY, TOP SPUD CONNECTION. C/W SLOAN ELETRONIC FLUSHOMETER, TRANSFORMER EL-154.	0.9	
	FLUSH VALVE		SLOAN	186 ES-S			
	CARRIER						
DF-1	DRINKING FOUNTAIN	WALL MOUNTED WATER COOLER	HAWS	ADA8AC	BARRIER FREE WALL MOUNTED WATER COOLER. C/W BOTTLE FILLER.		
	FITTING						
	CARRIER						

PLUMBING EQUIPMENT SCHEDULE

1. SEE SPECIFICATIONS
2. CONTROL PANEL
3. 24 HR 7 DAY TIMECLOCK
4. AQUASTAT
5. HYDROPNEUMATIC TANK
6. MIN. 50FT. POWER CORD/CABLE
7. LIFT-OUT MECHANISM
8. CONNECT TO BLDG. DDC SYSTEM

UNIT	SERVICE	LOCATION	TYPE	MANUFACTURER	MODEL	US GPM	TDH FT	MOTOR HP	MOTOR RPM	MOTOR ELEC.	CASING	IMPELLER	WORKING PRESS. PSI	PUMP ACCESSORY	REMARKS
PP-1	SANITARY	SANITARY SUMP	SUBMERSIBLE DUPLEX	ZOELLER	JX6292	50	30	0.5	3450	208/3/60	C.I.	BRZ	127	1,2,6,7	ALARM UPON HI-WATER LEVEL
PP-2	SANITARY	SANITARY SUMP	SUBMERSIBLE DUPLEX	ZOELLER	JX6292	50	30	0.5	3450	208/3/60	C.I.	BRZ	127	1,2,6,7	
PP-3	DHW RECIRC.	ROOF MECH. ROOM	IN-LINE	ARMSTRONG	ASTRO 50B - TA	10	12	0.1	2800	115/1/60	BRONZE	PPC	140	1,3,4,8	
PP-4	SANITARY PACKAGE UNIT	LIBRARY	SUBMERSIBLE SIMPLEX	ZOELLER	M53	20	15	0.5	-	115/1/60	-	-	-	8	ALARM UPON HI-WATER LEVEL
PP-5	SANITARY	ELEV. SUMP	SUBMERSIBLE SIMPLEX	ZOELLER	NX282	50	15	0.5	3450	115/1/60	C.I.	D.I.	126	1,2,6,7	ALARM UPON HI-WATER LEVEL
DF-1	WATER COOLER	2ND FLOOR	WALL MOUNTED	HAWS	ADA8AC			0.75		115/1/60					

Urban arts
Architecture * Urban Design
#401 - 134 Abbott Street, Vancouver, BC, V6B 2K4
t: 604-683-5060 e: info@urban-arts.ca

SEAL:

NOTES:

This drawing is the property of Urban Arts Architecture and may not be reproduced without their permission and unless the reproduction carries their name. All designs and all other information shown on this drawing are for use on the specified project only and shall not be used otherwise without written permission of this office.

The Contractor shall check and verify all dimensions and report any discrepancies before proceeding.

Do not scale drawings.

PROJECT NORTH
NORTH

MMM GROUP
MMM Group Limited
1045 Howe Street, Suite 700
Vancouver, BC V6Z 2A9
t: 604.685.9381
f: 604.683.8655
www.mmm.ca

Ref. No. 50-10-346

:Date	:Note
SEP 8/11	ISSUED FOR TENDER
AUG 29/11	RE-ISSUED FOR B.P
AUG 19/11	ISSUED FOR B.P

ISSUED

QUEENSBOROUGH COMMUNITY CENTRE EXPANSION

EQUIPEMENT SCHEDULES PLUMBING

SCALE=1/8"-1'-0"

P-8

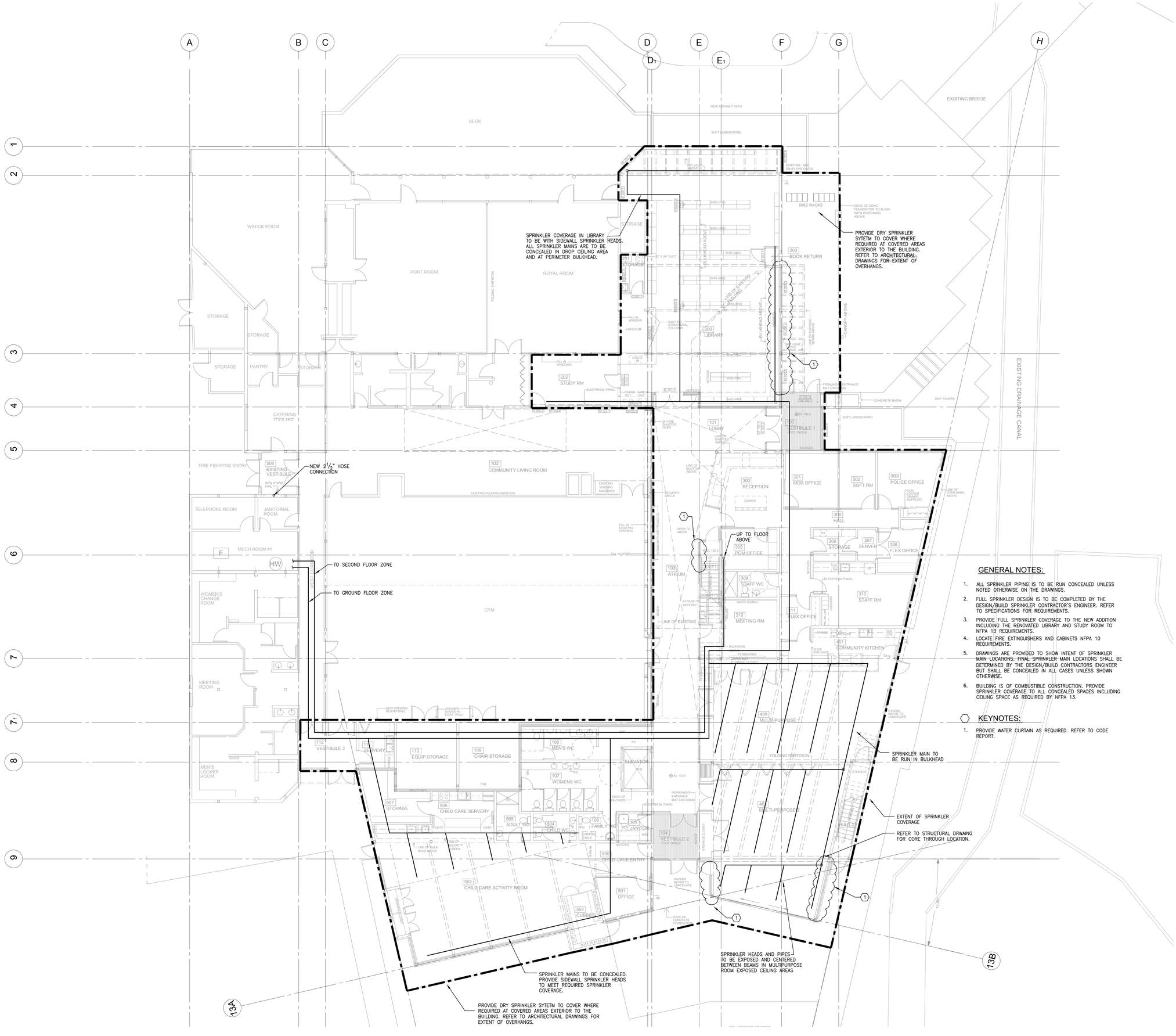

GENERAL NOTES:

1. ALL SPRINKLER PIPING IS TO BE RUN CONCEALED UNLESS NOTED OTHERWISE ON THE DRAWINGS.
2. FULL SPRINKLER DESIGN IS TO BE COMPLETED BY THE DESIGN/BUILD SPRINKLER CONTRACTOR'S ENGINEER. REFER TO SPECIFICATIONS FOR REQUIREMENTS.
3. PROVIDE FULL SPRINKLER COVERAGE TO THE NEW ADDITION INCLUDING THE RENOVATED LIBRARY AND STUDY ROOM TO NFPA 13 REQUIREMENTS.
4. LOCATE FIRE EXTINGUISHERS AND CABINETS NFPA 10 REQUIREMENTS.
5. DRAWINGS ARE PROVIDED TO SHOW INTENT OF SPRINKLER MAIN LOCATIONS. FINAL SPRINKLER MAIN LOCATIONS SHALL BE DETERMINED BY THE DESIGN/BUILD CONTRACTORS ENGINEER BUT SHALL BE CONCEALED IN ALL CASES UNLESS SHOWN OTHERWISE.
6. BUILDING IS OF COMBUSTIBLE CONSTRUCTION. PROVIDE SPRINKLER COVERAGE TO ALL CONCEALED SPACES INCLUDING CEILING SPACE AS REQUIRED BY NFPA 13.

KEYNOTES:

1. PROVIDE WATER CURTAIN AS REQUIRED. REFER TO CODE REPORT.

Urban arts
Architecture * Urban Design
#401 - 134 Abbott Street, Vancouver, BC, V6B 2K4
t: 604-683-5060 e: info@urban-arts.ca

SEAL:

NOTES:

This drawing is the property of Urban Arts Architecture and may not be reproduced without their permission and unless the reproduction carries their name. All designs and all other information shown on this drawing are for use on the specified project only and shall not be used otherwise without written permission of this office.

The Contractor shall check and verify all dimensions and report any discrepancies before proceeding.

Do not scale drawings.

PROJECT NORTH
NORTH

MMM GROUP
MMM Group Limited
1045 Howe Street, Suite 700
Vancouver, BC V6Z 2A9
t: 604.685.9381
f: 604.683.8655
www.mmm.ca

Ref. No. 50-10-346

:Date	:Note
SEP 8/11	ISSUED FOR TENDER
AUG 29/11	ISSUED FOR B.P

ISSUED

QUEENSBOROUGH COMMUNITY CENTRE EXPANSION

GROUND FLOOR SPRINKLER MAIN (REFERENCE ONLY)

SCALE=1/8"–1'–0"

FP-1

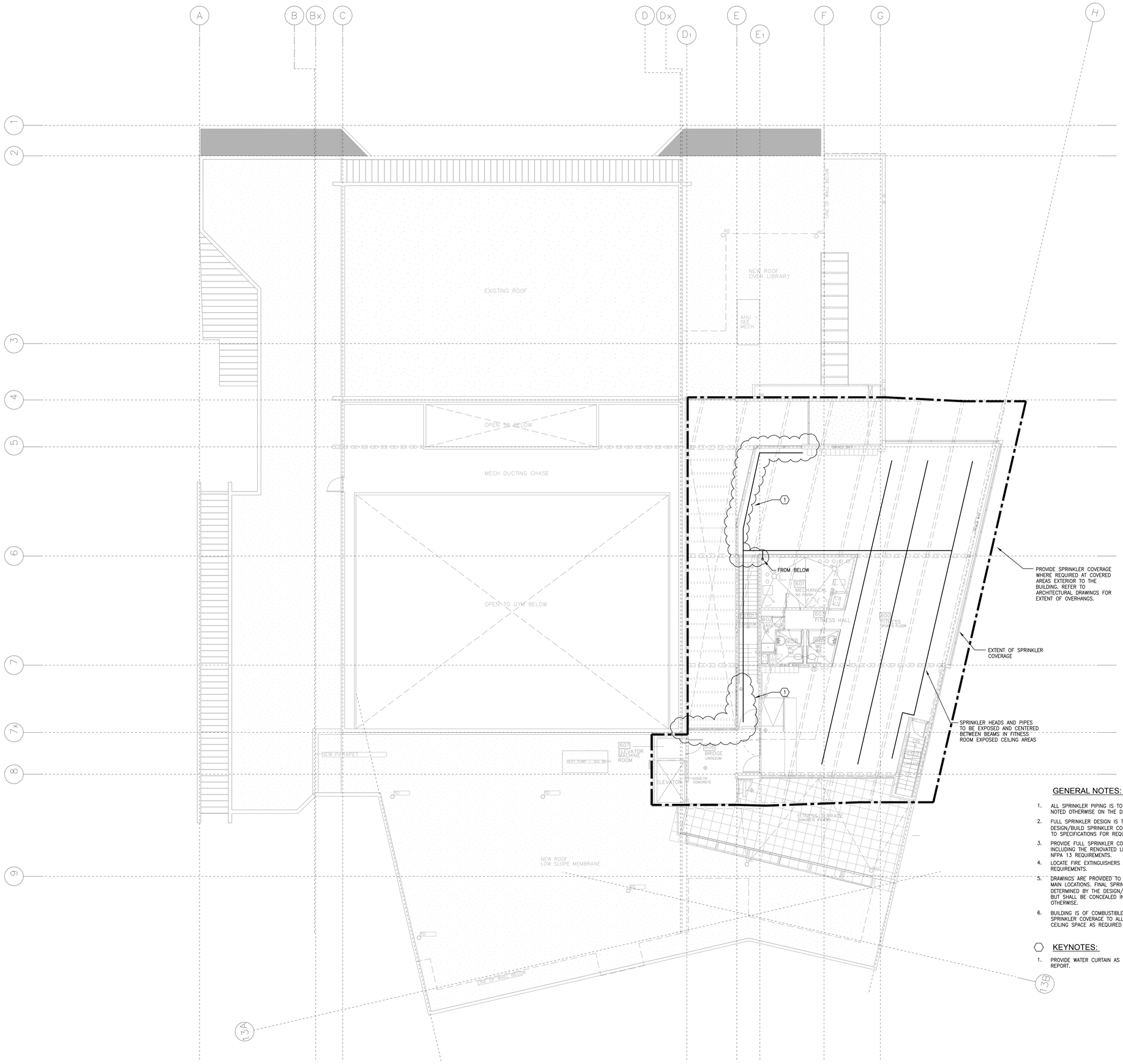

GENERAL NOTES:

1. ALL SPRINKLER PIPING IS TO BE RUN CONCEALED UNLESS NOTED OTHERWISE ON THE DRAWINGS.
2. FULL SPRINKLER DESIGN IS TO BE COMPLETED BY THE DESIGN/BUILD SPRINKLER CONTRACTOR'S ENGINEER. REFER TO SPECIFICATIONS FOR REQUIREMENTS.
3. PROVIDE FULL SPRINKLER COVERAGE TO THE NEW ADDITION INCLUDING THE RENOVATED LIBRARY AND STUDY ROOM TO NFPA 13 REQUIREMENTS.
4. LOCATE FIRE EXTINGUISHERS AND CABINETS NFPA 10 REQUIREMENTS.
5. DRAWINGS ARE PROVIDED TO SHOW INTENT OF SPRINKLER MAIN LOCATIONS. FINAL SPRINKLER MAIN LOCATIONS SHALL BE DETERMINED BY THE DESIGN/BUILD CONTRACTORS ENGINEER BUT SHALL BE CONCEALED IN ALL CASES UNLESS SHOWN OTHERWISE.
6. BUILDING IS OF COMBUSTIBLE CONSTRUCTION. PROVIDE SPRINKLER COVERAGE TO ALL CONCEALED SPACES INCLUDING CEILING SPACE AS REQUIRED BY NFPA 13.

KEYNOTES:

1. PROVIDE WATER CURTAIN AS REQUIRED. REFER TO CODE REPORT.

Urban arts
Architecture * Urban Design
#401 - 134 Abbott Street, Vancouver, BC, V6B 2K4
t: 604-683-5060 e: info@urban-arts.ca

SEAL:

NOTES:

This drawing is the property of Urban Arts Architecture and may not be reproduced without their permission and unless the reproduction carries their name. All designs and all other information shown on this drawing are for use on the specified project only and shall not be used otherwise without written permission of this office.

The Contractor shall check and verify all dimensions and report any discrepancies before proceeding.

Do not scale drawings.

PROJECT NORTH
NORTH

MMM GROUP
MMM Group Limited
1045 Howe Street, Suite 700
Vancouver, BC V6Z 2A9
t: 604.685.9381
f: 604.683.8655
www.mmm.ca

Ref. No. 50-10-346

:Date	:Note
SEP 8/11	ISSUED FOR TENDER
AUG 29/11	ISSUED FOR B.P

ISSUED

QUEENSBOROUGH COMMUNITY CENTRE EXPANSION

SECOND FLOOR SPRINKLER MAIN (REFERENCE ONLY)

SCALE=1/8"=1'-0"

FP-2