BM-H13DSP

TABLE OF CONTENTS

SHEET NO.	SHEET NAME
1	TABLE_OF_CONTENTS_1
2	TABLE_OF_CONTENTS_2
3	TABLE_OF_CONTENTS_3
4	TABLE_OF_CONTENTS_4
5	TABLE_OF_CONTENTS_5
6	MB BLOCK
7	EXPLOSION_DIAGRAM
8	DIMM_SPD_HSA_ADDRESS
9	UART TOPOLOGY
10	USB&SATA TOPOLOGY
11	CPU_I3C TOPOLOGY
12	PCIE TOPOLOGY
13	CPU_IIC TOPOLOGY
14	SPI TOPOLOGY
15	NCSI CLK TOPOLOGY
16	100M_CLK TOPOLOGY
17	CPU0_MEM_CHA
18	CPU0_MEM_CHB
19	CPU0_MEM_CHC
20	CPU0_MEM_CHD
21	CPU0_MEM_CHE
22	CPU0_MEM_CHF
23	CPU0_MEM_CHG
24	CPU0_MEM_CHH
25	CPU0_MEM_CHI
26	CPU0_MEM_CHJ
27	CPU0_MEM_CHK
28	CPU0_MEM_CHL
29	CPU0_PCIE_GLINK
30	CPU0_PCIE_PLINK

TABLE OF CONTENTS

SHEET NO.	SHEET NAME
31	CPU0_ESPI&USB
32	CPU0_MISC1
33	CPU0_MISC2
34	CPU0_STRAP
35	CPU0_POWER_PIN1
36	CPU0_POWER PIN2
37	CPU0_POWER PIN3
38	CPU0_POWER PIN4
39	CPU0_POWER PIN5
40	CPU0_POWER PIN6
41	CPU0_POWER PIN7
42	CPU1_MEM_CHA
43	CPU1_MEM_CHB
44	CPU1_MEM_CHC
45	CPU1_MEM_CHD
46	CPU1_MEM_CHE
47	CPU1_MEM_CHF
48	CPU1_MEM_CHG
49	CPU1_MEM_CHH
50	CPU1_MEM_CHI
51	CPU1_MEM_CHJ
52	CPU1_MEM_CHK
53	CPU1_MEM_CHL
54	CPU1_PCIE_GLINK
55	CPU1_PCIE_PLINK
56	CPU1_ESPI&USB
57	CPU1_MISC1
58	CPU1_MISC2
59	CPU1_STRAP
60	CPU1_POWER_PIN1

MODULE=---
FUNCTION=---

CNIT TECHNOLOGIES CO.,LTD.

BOARD NAME	BM-H14DSP_VERA		DRAWINGNO CNIT0302K1D0DL	
DESIGNED	ZHUHUI 00746	DATE 2024/10/22	SHEET 1 OF 276	REV
REVIEWED	GUBIN 00260	DATE 2024/11/22	Thu Oct 24 21:44:11 2024	

THIS DOCUMENT AND THE TECHNICAL DATA DISCLOSED ARE PROPRIETARY TO CNIT TECHNOLOGIES CO., LTD. AND SHALL NOT BE DUPLICATED USED RELEASED OR DISCLOSED WITHOUT EXPRESSING WRITTEN PERMISSION.

BM-H13DEP

TABLE OF CONTENTS

SHEET NO.	SHEET NAME
61	CPU1_POWER_PIN2
62	CPU1_POWER_PIN3
63	CPU1_POWER PIN4
64	CPU1_POWER PIN5
65	CPU1_POWER PIN6
66	CPU1_POWER PIN7
67	CPU0_DIMM_CHA
68	CPU0_DIMM_CHB
69	CPU0_DIMM_CHC
70	CPU0_DIMM_CHD
71	CPU0_DIMM_CHE
72	CPU0_DIMM_CHF
73	CPU0_DIMM_CHG
74	CPU0_DIMM_CHH
75	CPU0_DIMM_CHI
76	CPU0_DIMM_CHJ
77	CPU0_DIMM_CHK
78	CPU0_DIMM_CHL
79	CPU1_DIMM_CHA
80	CPU1_DIMM_CHB
81	CPU1_DIMM_CHC
82	CPU1_DIMM_CHD
83	CPU1_DIMM_CHE
84	CPU1_DIMM_CHF
85	CPU1_DIMM_CHG
86	CPU1_DIMM_CHH
87	CPU1_DIMM_CHI
88	CPU1_DIMM_CHJ
89	CPU1_DIMM_CHK
90	CPU1_DIMM_CHL

TABLE OF CONTENTS

SHEET NO.	SHEET NAME
91	SPI
92	USB
93	USB POWER
94	RTC
95	RTC LDO& BMC RTCCLK
96	P0_DIMM_I3C
97	P1_DIMM_I3C
98	I3C5_MUX1
99	I3C5_MUX2
100	I3C6_MUX1
101	I3C6_MUX2
102	I3C_APML/SEC_LEVEL_SHIFT
103	I3C_APML/SEC_MUX
104	I2C5_PCA9545
105	I2C1
106	I2C1_PCA9617
107	I2C2
108	I2C4/7
109	I2C10/11
110	I2C9_PCA9548_1
111	I2C9_PCA9548_2
112	I2C9_PCA9548_3
113	I2C7_PCA9617
114	I2C7_PCA9545
115	I2C8_PCA9617
116	I2C8_PCA9555_1
117	I2C8_PCA9555_2
118	CPU0_I2C
119	CPU0_HP_ALERT
120	CPU0_I2C5_PCA9548

MODULE=---
FUNCTION=---

CNIT TECHNOLOGIES CO.,LTD.

BOARD NAME	BM-H14DSP_VERA		DRAWINGNO CNIT0302K1D0DL	
DESIGNED	ZHUHUI 00746	DATE 2024/10/22	SHEET 2 OF 276	REV
REVIEWED	GUBIN 00260	DATE 2024/11/22	Thu Oct 17 14:48:26 2024	

THIS DOCUMENT AND THE TECHNICAL DATA DISCLOSED ARE PROPRIETARY TO CNIT TECHNOLOGIES CO., LTD. AND SHALL NOT BE DUPLICATED USED RELEASED OR DISCLOSED WITHOUT EXPRESSING WRITTEN PERMISSION.

BM-H13DEP

TABLE OF CONTENTS

SHEET NO.	SHEET NAME
121	SLIMSAS_SATA_1
122	SLIMSAS_SATA_2
123	MCIO_P0G3
124	MCIO_P0G3_AC
125	MCIO_P0P0
126	MCIO_P0P1
127	MCIO_P0P2
128	MCIO_P0P3
129	MCIO_P0_P0P1_AC
130	MCIO_P0_P2P3_AC
131	MCIO_P1G1
132	MCIO_P1G1_AC
133	MCIO_P1P0
134	MCIO_P1P1
135	MCIO_P1P2
136	MCIO_P1P3
137	MCIO_P1_P0P1_AC
138	MCIO_P1_P2P3_AC
139	MCIO_P1P4
140	100M_CLK_GEN
141	RESERVED1
142	RESERVED2
143	CLK_DB2000_1
144	CLK_DB2000_2
145	CLK_DB800_3
146	CLK_BUFFER_4
147	JTAG & HDT_1
148	JTAG & HDT_2
149	JTAG & HDT_3
150	JTAG & HDT_4

TABLE OF CONTENTS

SHEET NO.	SHEET NAME
151	JTAG & HDT_5
152	BOARD_POWER_CONN_1
153	BOARD_POWER_CONN_2
154	FPB_CONN
155	PSU_SIDEBAND
156	BOARD_CONNECTOR
157	HOTPLUG_VPP CONN
158	OCP_CONN
159	NCSI_CONN & IPMB
160	CMU_GENZ_4C
161	SERIES RESISTOR
162	CPLD1_1
163	CPLD1_2
164	CPLD1_3
165	CPLD1_4
166	SERIES RESISTORS
167	PRODUCT_ID
168	ADC
169	TEMP_SENSORS
170	FRU_EEPROM
171	POWER_MONITOR
172	CPU0_VR_CORE0_CONTROLLER
173	CPU0_VR_CORE0_MISC
174	CPU0_CORE0_DRMOS1
175	CPU0_CORE0_DRMOS2
176	CPU0_SOC_DRMOS
177	CPU0_CORE0_CAP1
178	CPU0_CORE0_CAP2
179	CPU0_VR_CORE1_CONTROLLER
180	CPU0_VR_CORE1_MISC

MODULE=---
FUNCTION=---

CNIT TECHNOLOGIES CO.,LTD.

BOARD NAME	BM-H14DSP_VERA		DRAWINGNO CNIT0302K1D0DL	
DESIGNED	ZHUHUI 00746	DATE 2024/10/22	SHEET 3 OF 276	REV
REVIEWED	GUBIN 00260	DATE 2024/11/22	Thu Oct 17 14:48:28 2024	

THIS DOCUMENT AND THE TECHNICAL DATA DISCLOSED ARE PROPRIETARY TO CNIT TECHNOLOGIES CO., LTD. AND SHALL NOT BE DUPLICATED USED RELEASED OR DISCLOSED WITHOUT EXPRESSING WRITTEN PERMISSION.

BM-H13DEP

TABLE OF CONTENTS

SHEET NO.	SHEET NAME
181	CPU0_CORE1_DRMOS1
182	CPU0_CORE1_DRMOS2
183	CPU0_SUS_DRMOS
184	CPU0_CORE1_CAP1
185	CPU0_CORE1_CAP2
186	CPU0_VR_VDDIO_CONTROLLER
187	CPU0_VDDIO_DRMOS1
188	CPU0_VDDIO_CAP
189	CPU1_VR_CORE0_CONTROLLER
190	CPU1_VR_CORE0_MISC
191	CPU1_CORE0_DRMOS1
192	CPU1_CORE0_DRMOS2
193	CPU1_SOC_DRMOS
194	CPU1_CORE0_CAP1
195	CPU1_CORE0_CAP2
196	CPU1_VR_CORE1_CONTROLLER
197	CPU1_CORE1_DRMOS1
198	CPU1_CORE1_DRMOS2
199	CPU1_CORE1_CAP1
200	CPU1_CORE1_CAP2
201	CPU1_VR_VDDIO_CONTROLLER
202	CPU1_VDDIO_DRMOS1
203	CPU1_VDDIO_CAP
204	POL_CPU0_VDD_18_S5
205	POL_CPU1_VDD_18_S5
206	POL_CPU0_VDDC_33_S5
207	POL_CPU1_VDDC_33_S5
208	POL_P3V3_STBY_B
209	POL_P5V_STBY
210	POL_P3V3_STBY

TABLE OF CONTENTS

SHEET NO.	SHEET NAME
211	LDO_P1V8
212	P12V_CPU0_DIMM
213	P12V_CPU0_ADM1278_2
214	P0_DIMM_EFUSE_REDUNDANCE
215	P12V_CPU1_DIMM
216	P12V_CPU1_ADM1278_2
217	P1_DIMM_EFUSE_REDUNDANCE
218	P12V_EFUSE
219	P12V_SSD_EFUSE
220	P12V_STBY_EFUSE
221	MECHANICAL
222	NOTES1
223	NOTES2
224	P12V_STBY
225	P12V_DROOP
226	P12V_STBY_ISENSE
227	P12V_ISENSE
228	DISCHARGE
229	P12V_SHORT_DET
230	P1V2_STBY
231	P5V
232	P3V_BAT
233	COUPON
234	PSU_1
235	PSU_2
236	PSU_3
237	PSU_4
238	REAR_PWR
239	GPU_PWR1
240	GPU_PWR2

MODULE=---
FUNCTION=---

CNIT TECHNOLOGIES CO.,LTD.

BOARD NAME	BM-H14DSP_VERA		DRAWINGNO CNIT0302K1D0DL	
DESIGNED	ZHUHUI 00746	DATE 2024/10/22	SHEET 4 OF 276	REV
REVIEWED	GUBIN 00260	DATE 2024/11/22	Thu Jan 02 17:25:30 2025	

THIS DOCUMENT AND THE TECHNICAL DATA DISCLOSED ARE PROPRIETARY TO CNIT TECHNOLOGIES CO., LTD. AND SHALL NOT BE DUPLICATED USED RELEASED OR DISCLOSED WITHOUT EXPRESSING WRITTEN PERMISSION.

BM-H13DEP

TABLE OF CONTENTS

SHEET NO.	SHEET NAME
241	GPU_PWR_CN1
242	GPU_PWR_CN2
243	GPU_PWR_CN3
244	GPU_PWR_CN4
245	GPU_PWR_CN5
246	FRONT_EAR1
247	FRONT_EAR2
248	FRONT_EAR3
249	BP_AUX1
250	BP_AUX2
251	BP_AUX3
252	BP_AUX4_TPM
253	TMP
254	CPLD2_1
255	CPLD2_2
256	CPLD2_3
257	CPLD2_4
258	CPLD_165_1
259	CPLD_165_2
260	CPLD_JTAG
261	DET_CON
262	OCP_1
263	OCP_2
264	NSCI_CONNECT
265	ESD
266	M2_1
267	M2_2
268	M2_3
269	M2_4
270	M2_PWR

TABLE OF CONTENTS

SHEET NO.	SHEET NAME
271	USB_HUB_1
272	USB_HUB_2
273	USB_HUB_3
274	BIOS_FLASH_SW1
275	BOIS_FLASH_SW2
276	BIOS_FLASH

MODULE=---
FUNCTION=---

CNIT TECHNOLOGIES CO.,LTD.

BOARD NAME	BM-H14DSP_VERA		DRAWINGNO CNIT0302K1D0DL	
DESIGNED	ZHUHUI 00746	DATE 2024/10/22	SHEET 5 OF 276	REV
REVIEWED	GUBIN 00260	DATE 2024/11/22	Thu Jan 02 17:25:31 2025	

THIS DOCUMENT AND THE TECHNICAL DATA DISCLOSED ARE PROPRIETARY TO CNIT TECHNOLOGIES CO., LTD. AND SHALL NOT BE DUPLICATED USED RELEASED OR DISCLOSED WITHOUT EXPRESSING WRITTEN PERMISSION.

MB_BLOCK

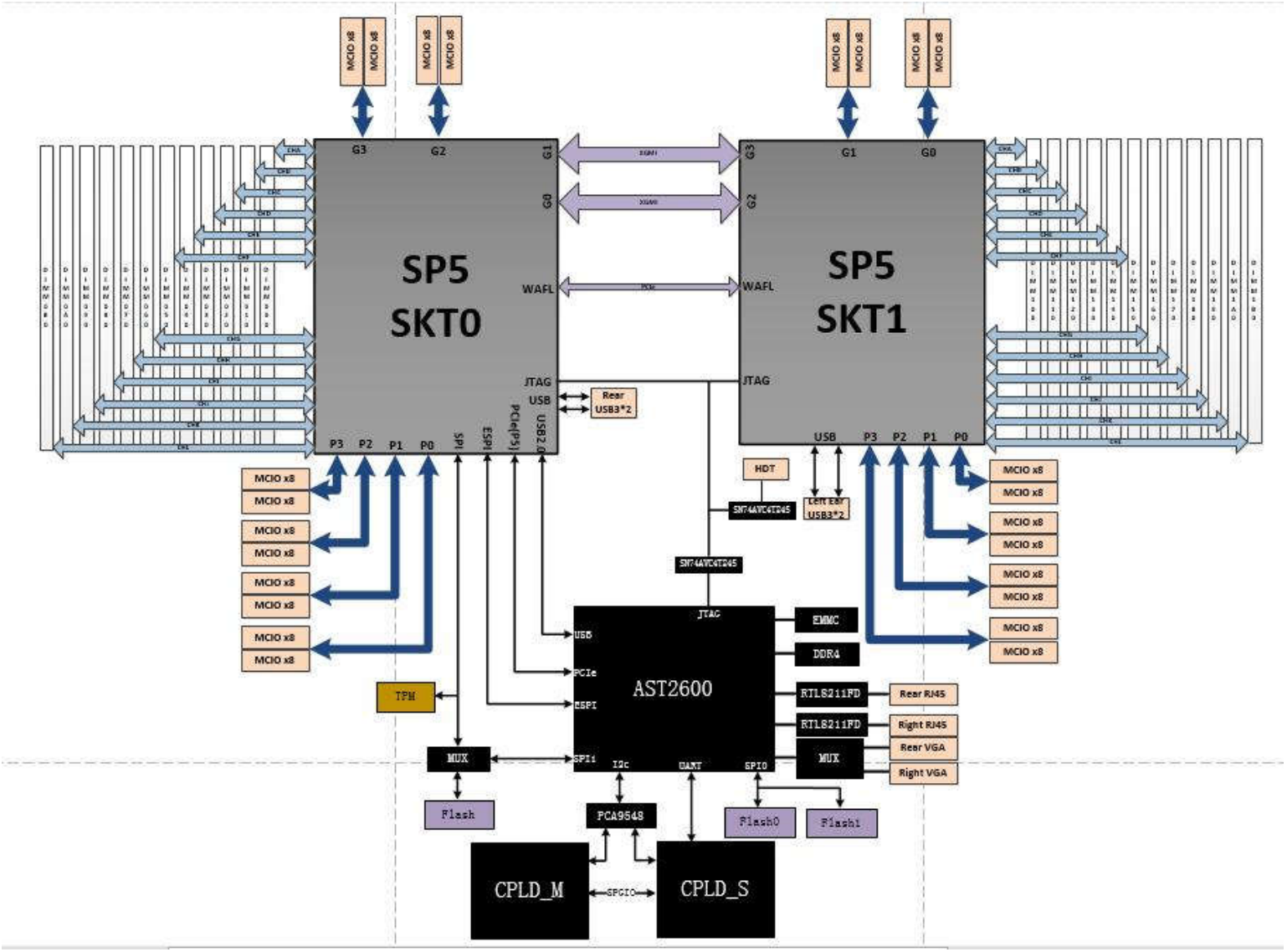

MODULE=---
FUNCTION=---

CNIT TECHNOLOGIES CO.,LTD.				
BOARD NAME BM-H14DSP_VERA			DRAWINGNO CNIT0302K1D0DL	
DESIGNED	ZHUHUI 00746	DATE 2024/10/22	SHEET 6 OF 276	REV
REVIEWED	GUBIN 00260	DATE 2024/11/22	Wed Dec 25 11:27:56 2024	

THIS DOCUMENT AND THE TECHNICAL DATA DISCLOSED ARE PROPRIETARY TO CNIT TECHNOLOGIES CO., LTD. AND SHALL NOT BE DUPLICATED USED RELEASED OR DISCLOSED WITHOUT EXPRESSING WRITTEN PERMISSION.

EXPLOSION_DIAGRAM

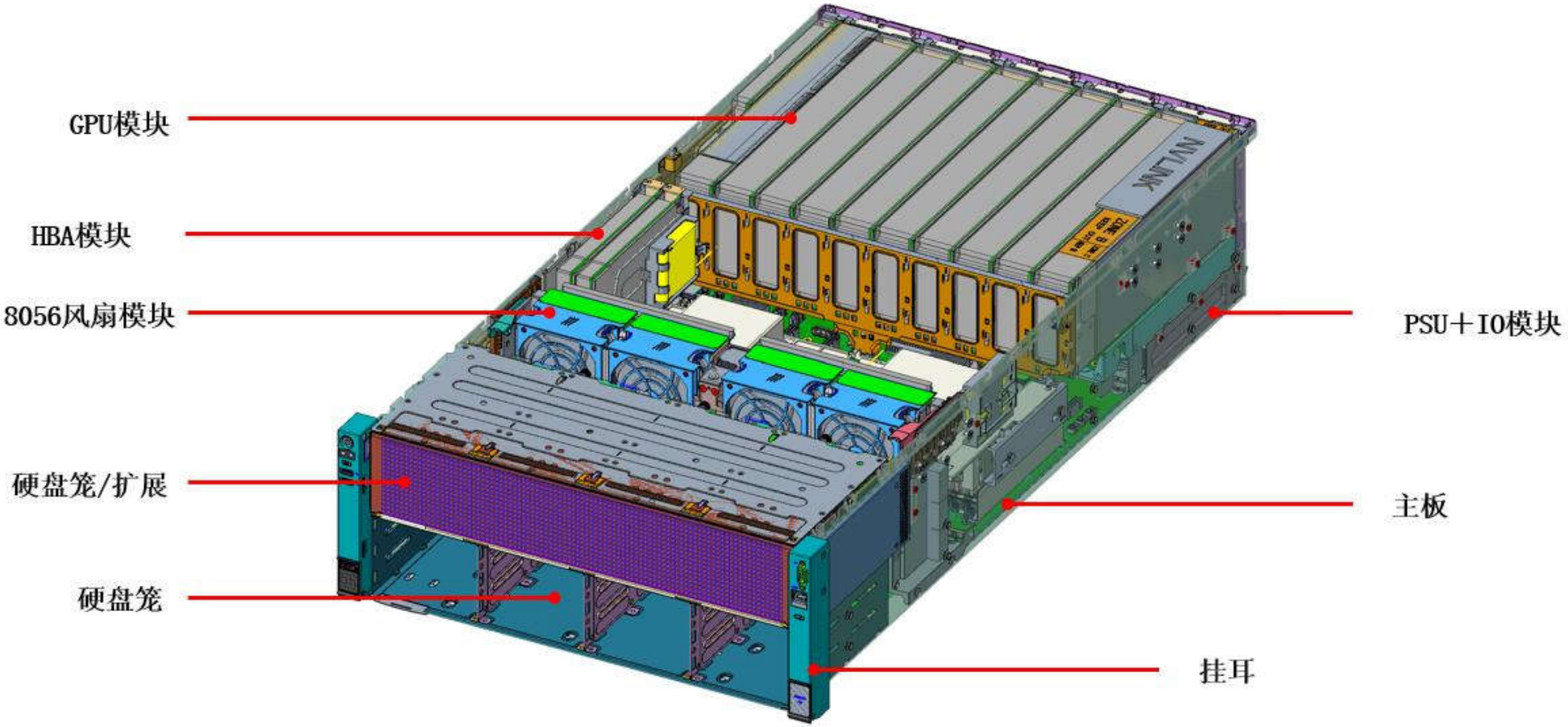

MODULE=---
FUNCTION=---

CNIT TECHNOLOGIES CO.,LTD.				
BOARD NAME BM-H14DSP_VERA			DRAWINGNO CNIT0302K1D0DL	
DESIGNED	ZHUHUI 00746	DATE 2024/10/22	SHEET 7 OF 276	REV
REVIEWED	GUBIN 00260	DATE 2024/11/22	Wed Dec 25 14:28:24 2024	

THIS DOCUMENT AND THE TECHNICAL DATA DISCLOSED ARE PROPRIETARY TO CNIT TECHNOLOGIES CO., LTD. AND SHALL NOT BE DUPLICATED USED RELEASED OR DISCLOSED WITHOUT EXPRESSING WRITTEN PERMISSION.

DIMM_HSA_ADDRESS

HSA Pin Connection	3-bit HID	Comment
10.0 KΩ to GND	HID = 000	1% Resistor
15.4 KΩ to GND	HID = 001	
23.2 KΩ to GND	HID = 010	
35.7 KΩ to GND	HID = 011	
54.9 KΩ to GND	HID = 100	
84.5 KΩ to GND	HID = 101	
127 KΩ to GND	HID = 110	
196 KΩ to GND	HID = 111	
Tied directly to GND	HID = 000	Offline Mode; Write protect override enabled

MODULE=---
FUNCTION=---

THIS DOCUMENT AND THE TECHNICAL DATA DISCLOSED ARE PROPRIETARY TO CNIT TECHNOLOGIES CO., LTD. AND SHALL NOT BE DUPLICATED USED RELEASED OR DISCLOSED WITHOUT EXPRESSING WRITTEN PERMISSION.

UART_TOPOLOGY

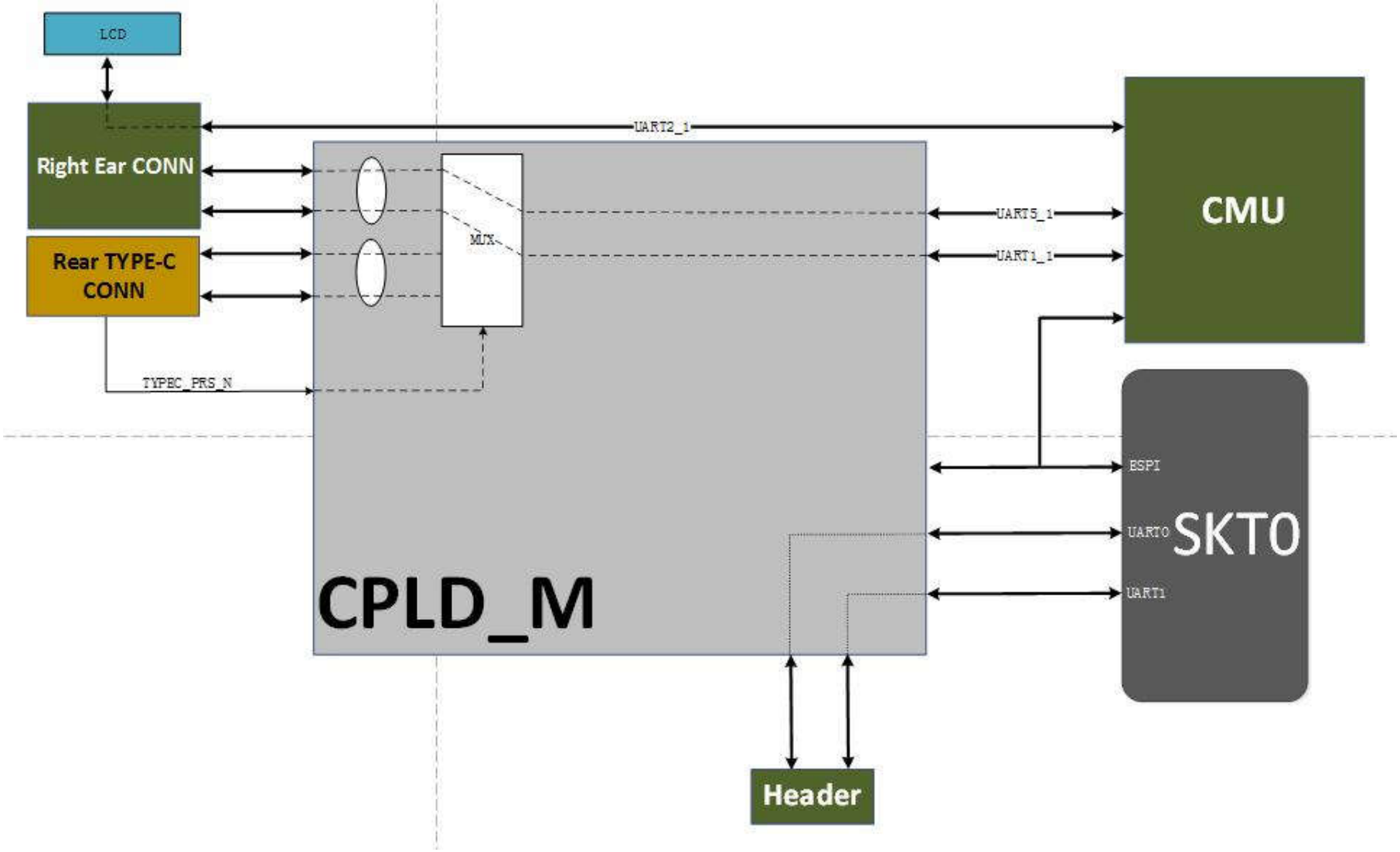

MODULE=---
FUNCTION=---

CNIT TECHNOLOGIES CO.,LTD.				
BOARD NAME BM-H14DSP_VERA			DRAWINGNO CNIT0302K1D0DL	
DESIGNED	ZHUHUI 00746	DATE 2024/10/22	SHEET 9 OF 276	REV
REVIEWED	GUBIN 00260	DATE 2024/11/22	Wed Dec 25 14:07:08 2024	

THIS DOCUMENT AND THE TECHNICAL DATA DISCLOSED ARE PROPRIETARY TO CNIT TECHNOLOGIES CO., LTD. AND SHALL NOT BE DUPLICATED USED RELEASED OR DISCLOSED WITHOUT EXPRESSING WRITTEN PERMISSION.

USB&SATA_TOPOLOGY

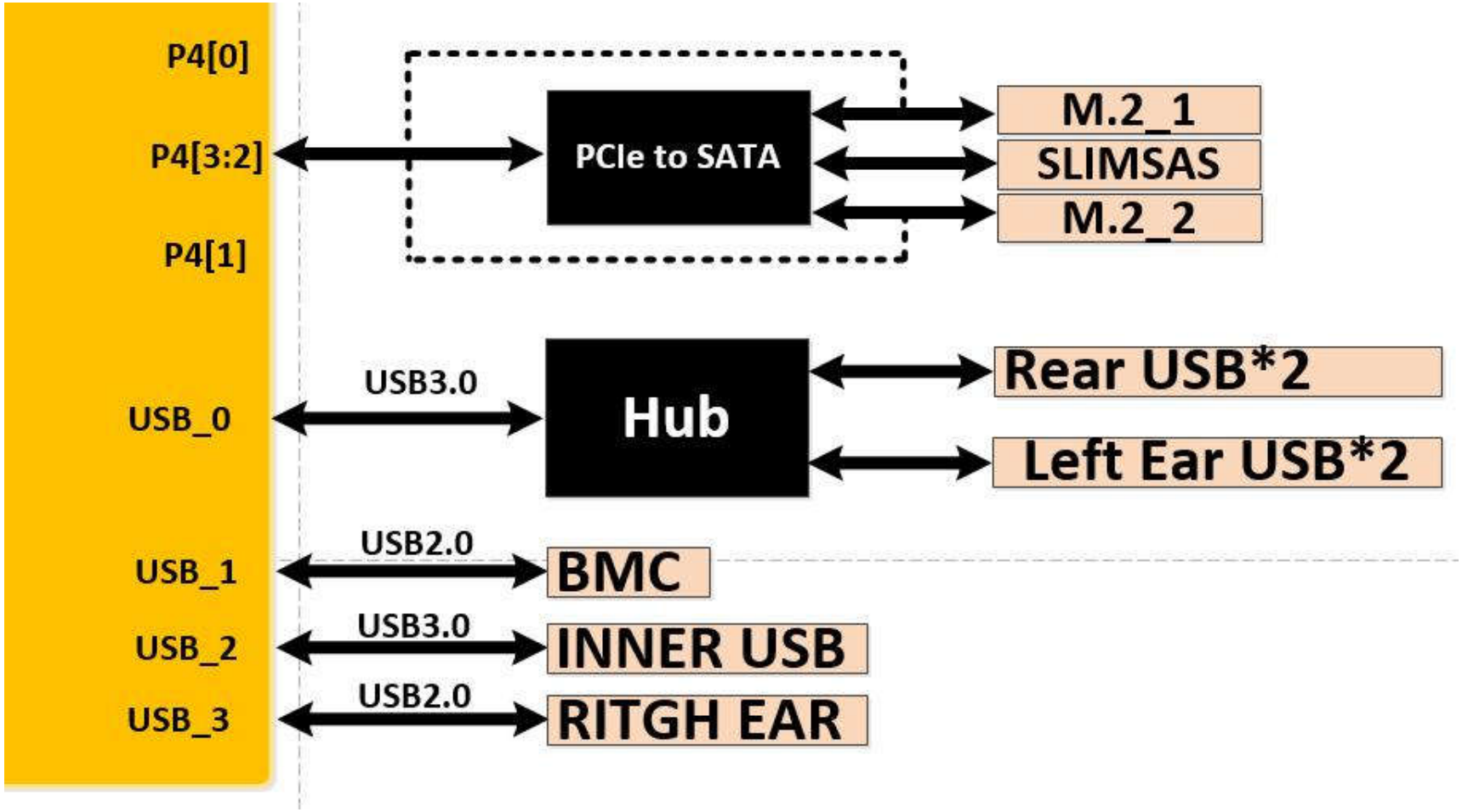

MODULE=---
FUNCTION=---

CNIT TECHNOLOGIES CO.,LTD.				
BOARD NAME BM-H14DSP_VERA			DRAWINGNO CNIT0302K1D0DL	
DESIGNED	ZHUHUI 00746	DATE 2024/10/22	SHEET 10 OF 276	REV
REVIEWED	GUBIN 00260	DATE 2024/11/22	Wed Dec 25 14:07:08 2024	

THIS DOCUMENT AND THE TECHNICAL DATA DISCLOSED ARE PROPRIETARY TO CNIT TECHNOLOGIES CO., LTD. AND SHALL NOT BE DUPLICATED USED RELEASED OR DISCLOSED WITHOUT EXPRESSING WRITTEN PERMISSION.

I2C&I3C_TOPOLOGY

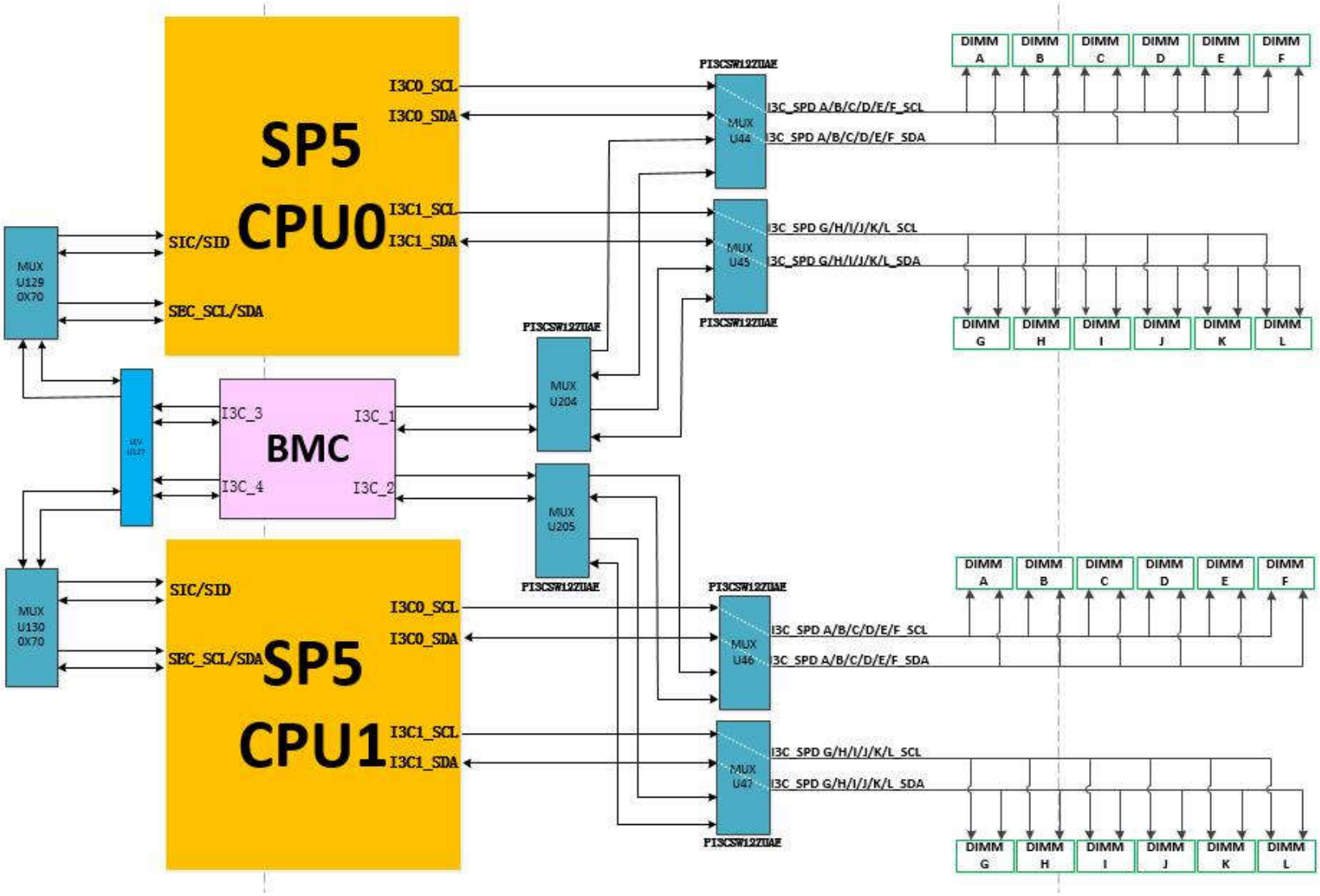

MODULE=---

FUNCTION=---

CNIT TECHNOLOGIES CO.,LTD.				
BOARD NAME BM-H14DSP_VERA			DRAWINGNO CNIT0302K1D0DL	
DESIGNED	ZHUHUI 00746	DATE 2024/10/22	SHEET 11 OF 276	REV
REVIEWED	GUBIN 00260	DATE 2024/11/22	Wed Dec 25 14:03:19 2024	

THIS DOCUMENT AND THE TECHNICAL DATA DISCLOSED ARE PROPRIETARY TO CNIT TECHNOLOGIES CO., LTD. AND SHALL NOT BE DUPLICATED USED RELEASED OR DISCLOSED WITHOUT EXPRESSING WRITTEN PERMISSION.

PCIE_TOPOLOGY

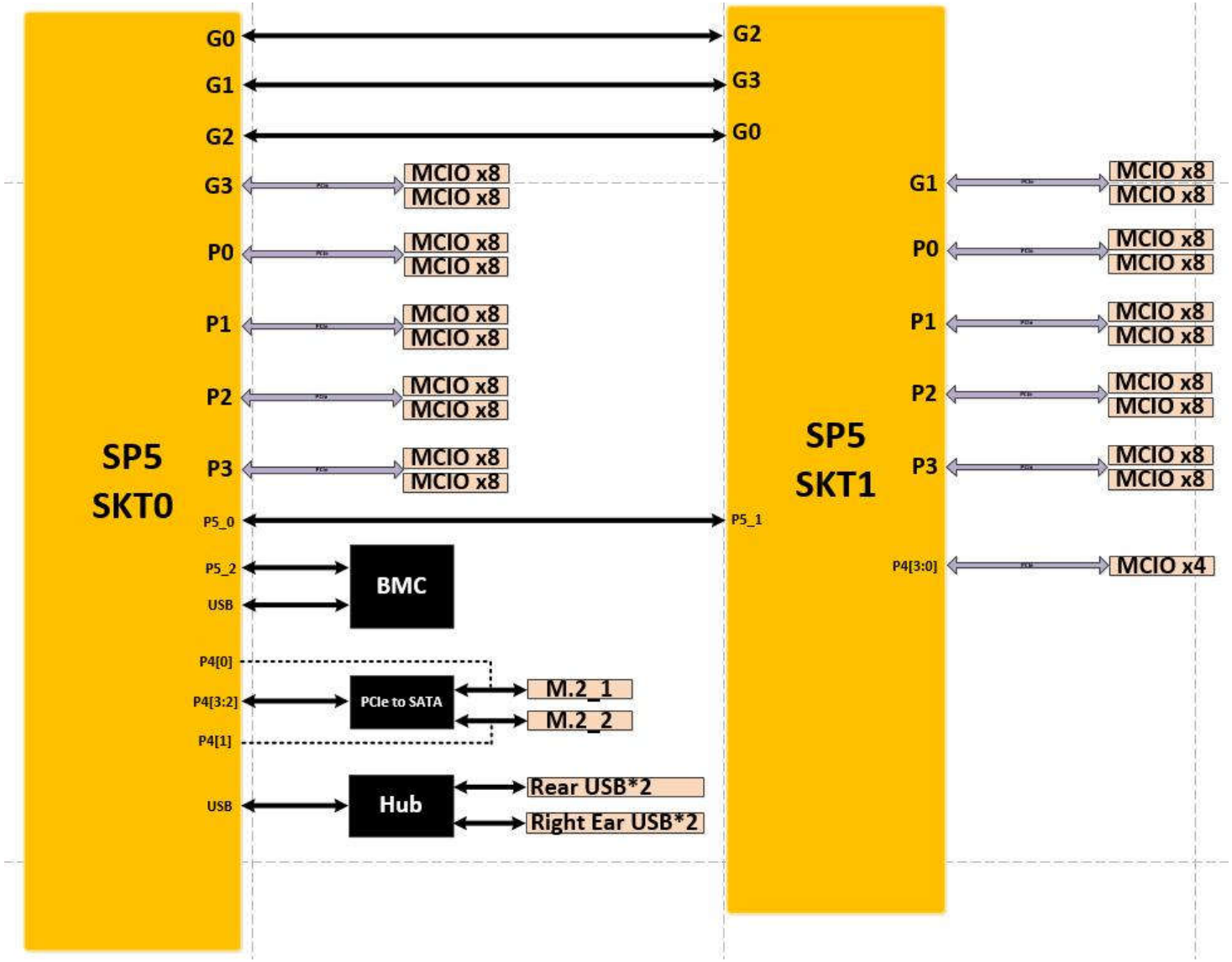

MODULE=---
FUNCTION=---

CNIT TECHNOLOGIES CO.,LTD.				
BOARD NAME BM-H14DSP_VERA			DRAWINGNO CNIT0302K1D0DL	
DESIGNED	ZHUHUI 00746	DATE 2024/10/22	SHEET 12 OF 276	REV
REVIEWED	GUBIN 00260	DATE 2024/11/22	Wed Dec 25 11:37:52 2024	

THIS DOCUMENT AND THE TECHNICAL DATA DISCLOSED ARE PROPRIETARY TO CNIT TECHNOLOGIES CO., LTD. AND SHALL NOT BE DUPLICATED USED RELEASED OR DISCLOSED WITHOUT EXPRESSING WRITTEN PERMISSION.

HDT_TOPOLOGY

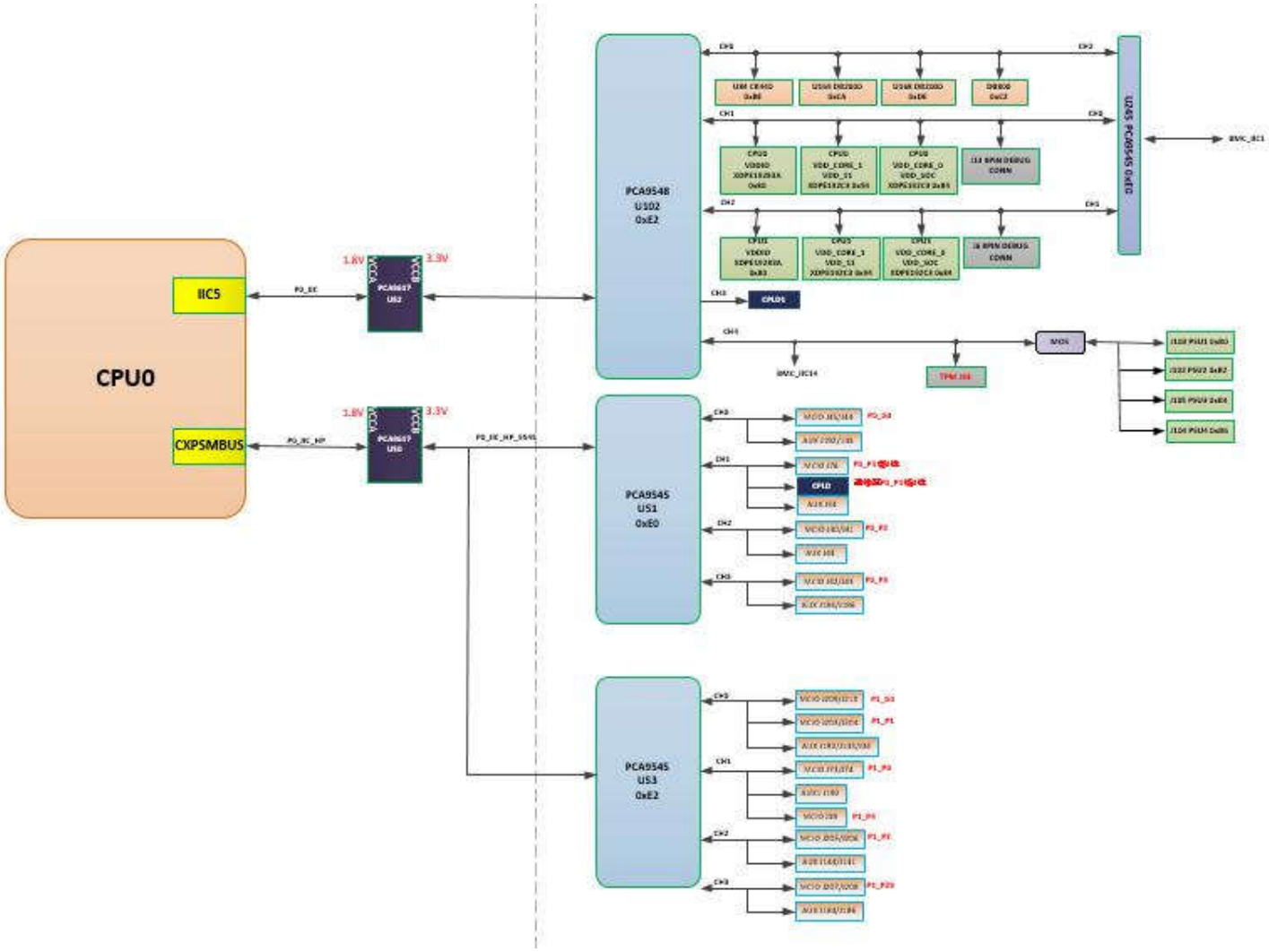

MODULE=---

FUNCTION=---

CNIT TECHNOLOGIES CO.,LTD.				
BOARD NAME BM-H14DSP_VERA			DRAWINGNO CNIT0302K1D0DL	
DESIGNED	ZHUHUI 00746	DATE 2024/10/22	SHEET 13 OF 276	REV
REVIEWED	GUBIN 00260	DATE 2024/11/22	Wed Dec 25 14:07:09 2024	

THIS DOCUMENT AND THE TECHNICAL DATA DISCLOSED ARE PROPRIETARY TO CNIT TECHNOLOGIES CO., LTD. AND SHALL NOT BE DUPLICATED USED RELEASED OR DISCLOSED WITHOUT EXPRESSING WRITTEN PERMISSION.

SPI_TOPOLOGY

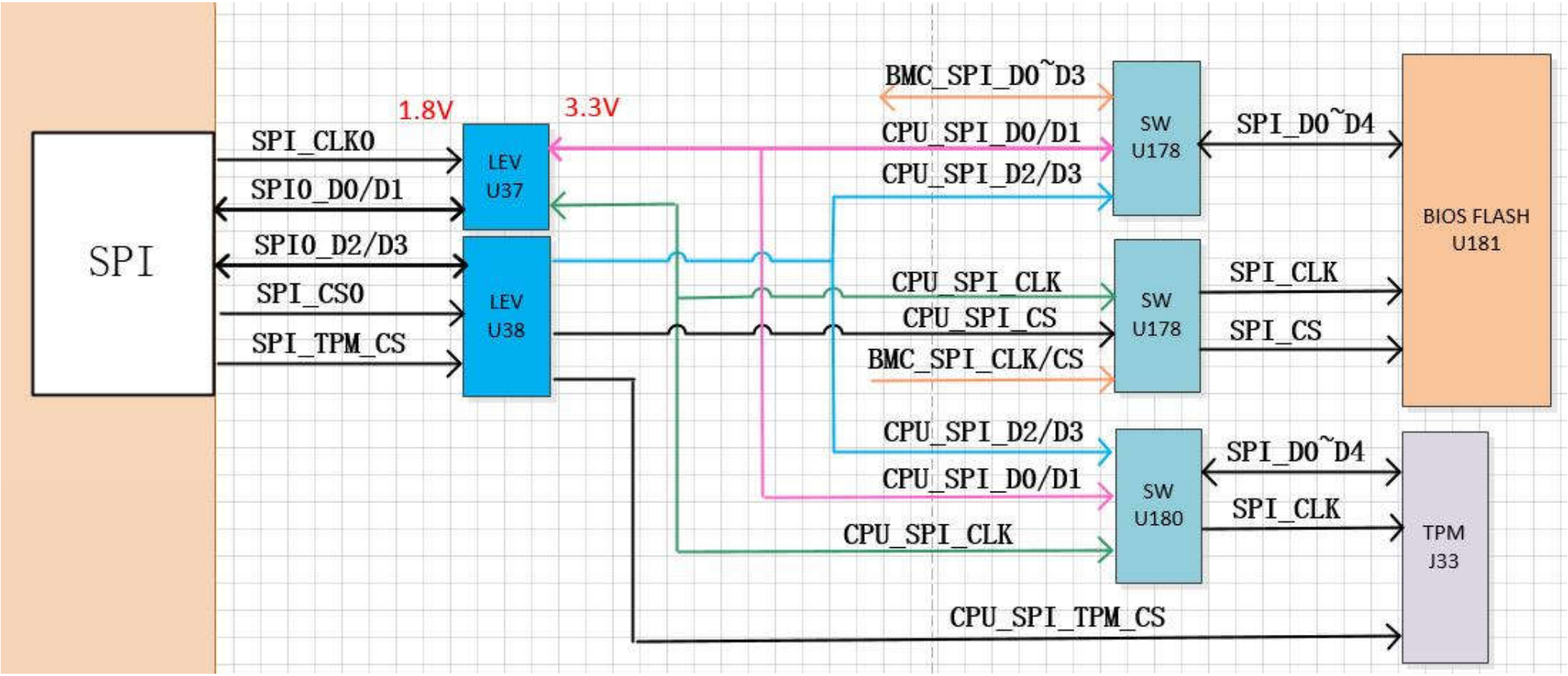

MODULE=---
FUNCTION=---

CNIT TECHNOLOGIES CO.,LTD.				
BOARD NAME BM-H14DSP_VERA			DRAWINGNO CNIT0302K1D0DL	
DESIGNED	ZHUHUI 00746	DATE 2024/10/22	SHEET 14 OF 276	REV
REVIEWED	GUBIN 00260	DATE 2024/11/22	Wed Dec 25 11:27:55 2024	

THIS DOCUMENT AND THE TECHNICAL DATA DISCLOSED ARE PROPRIETARY TO CNIT TECHNOLOGIES CO., LTD. AND SHALL NOT BE DUPLICATED USED RELEASED OR DISCLOSED WITHOUT EXPRESSING WRITTEN PERMISSION.

NCSI_TOPOLOGY

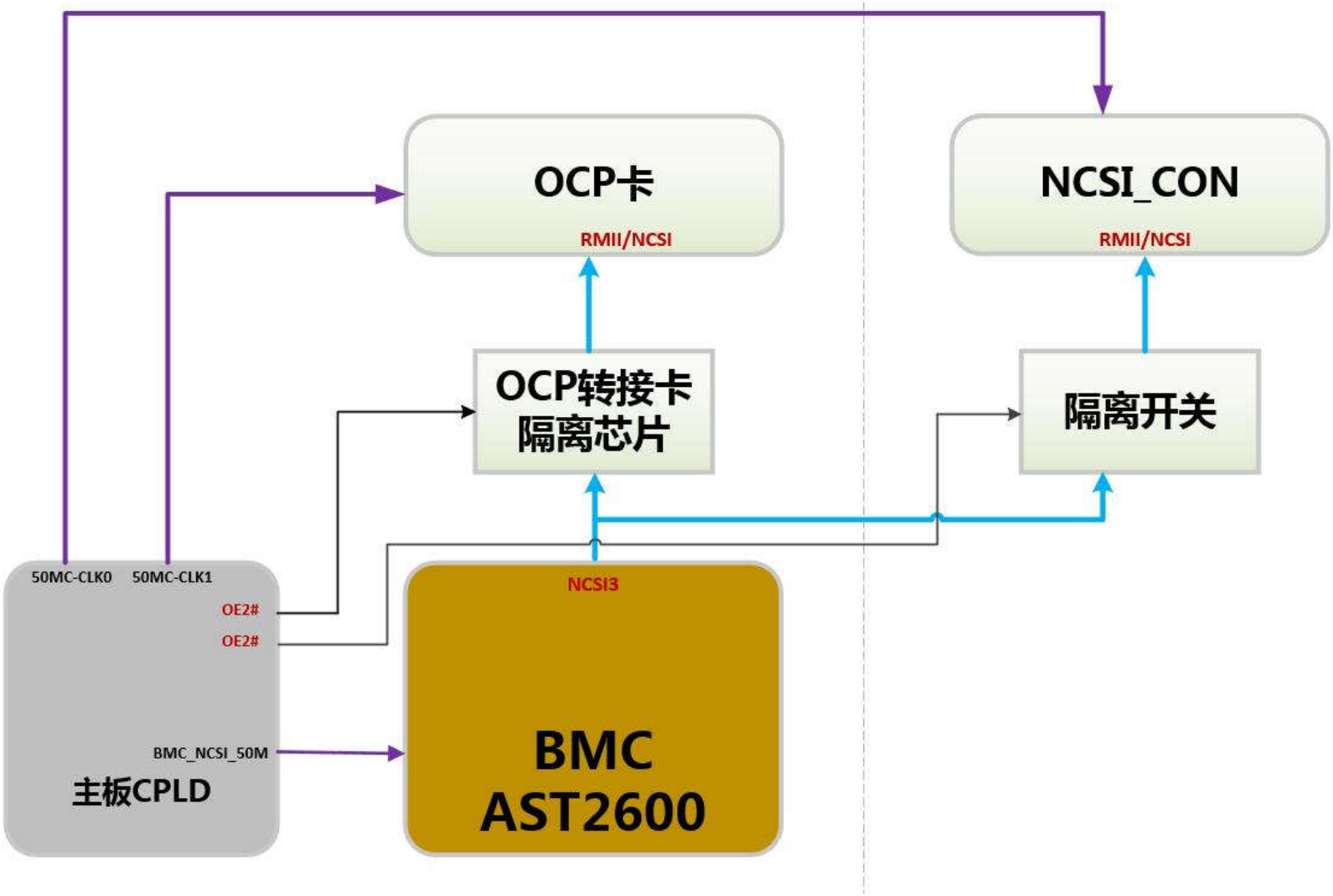

MODULE=---
FUNCTION=---

CNIT TECHNOLOGIES CO.,LTD.				
BOARD NAME BM-H14DSP_VERA			DRAWINGNO CNIT0302K1D0DL	
DESIGNED	ZHUHUI 00746	DATE 2024/10/22	SHEET 15 OF 276	REV
REVIEWED	GUBIN 00260	DATE 2024/11/22	Wed Dec 25 11:37:53 2024	

THIS DOCUMENT AND THE TECHNICAL DATA DISCLOSED ARE PROPRIETARY TO CNIT TECHNOLOGIES CO., LTD. AND SHALL NOT BE DUPLICATED USED RELEASED OR DISCLOSED WITHOUT EXPRESSING WRITTEN PERMISSION.

100MHZ_CLK_TOPOLOGY

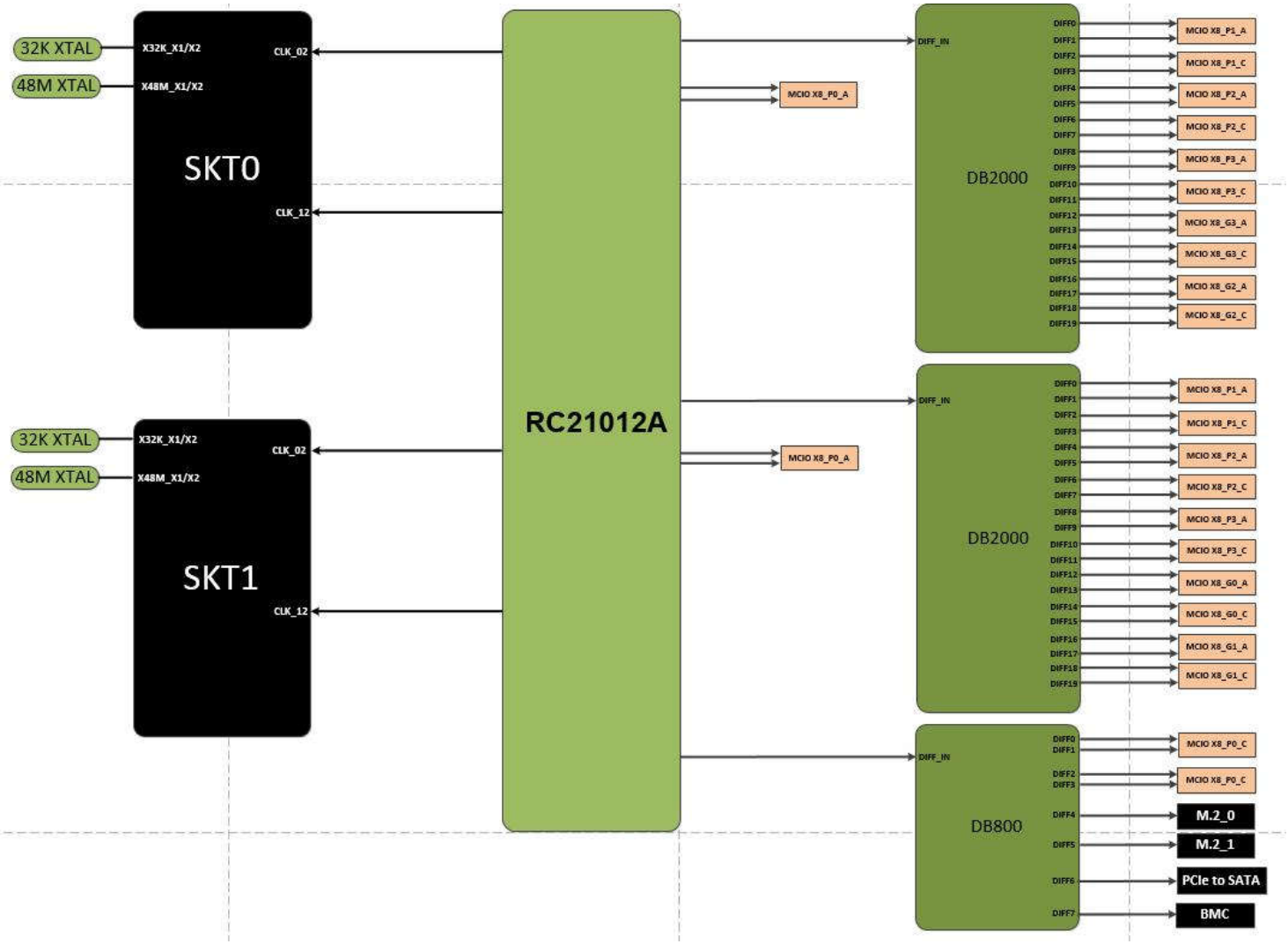

MODULE=---
FUNCTION=---

CNIT TECHNOLOGIES CO.,LTD.				
BOARD NAME BM-H14DSP_VERA			DRAWINGNO CNIT0302K1D0DL	
DESIGNED	ZHUHUI 00746	DATE 2024/10/22	SHEET 16 OF 276	REV
REVIEWED	GUBIN 00260	DATE 2024/11/22	Wed Dec 25 11:27:57 2024	

THIS DOCUMENT AND THE TECHNICAL DATA DISCLOSED ARE PROPRIETARY TO CNIT TECHNOLOGIES CO., LTD. AND SHALL NOT BE DUPLICATED USED RELEASED OR DISCLOSED WITHOUT EXPRESSING WRITTEN PERMISSION.

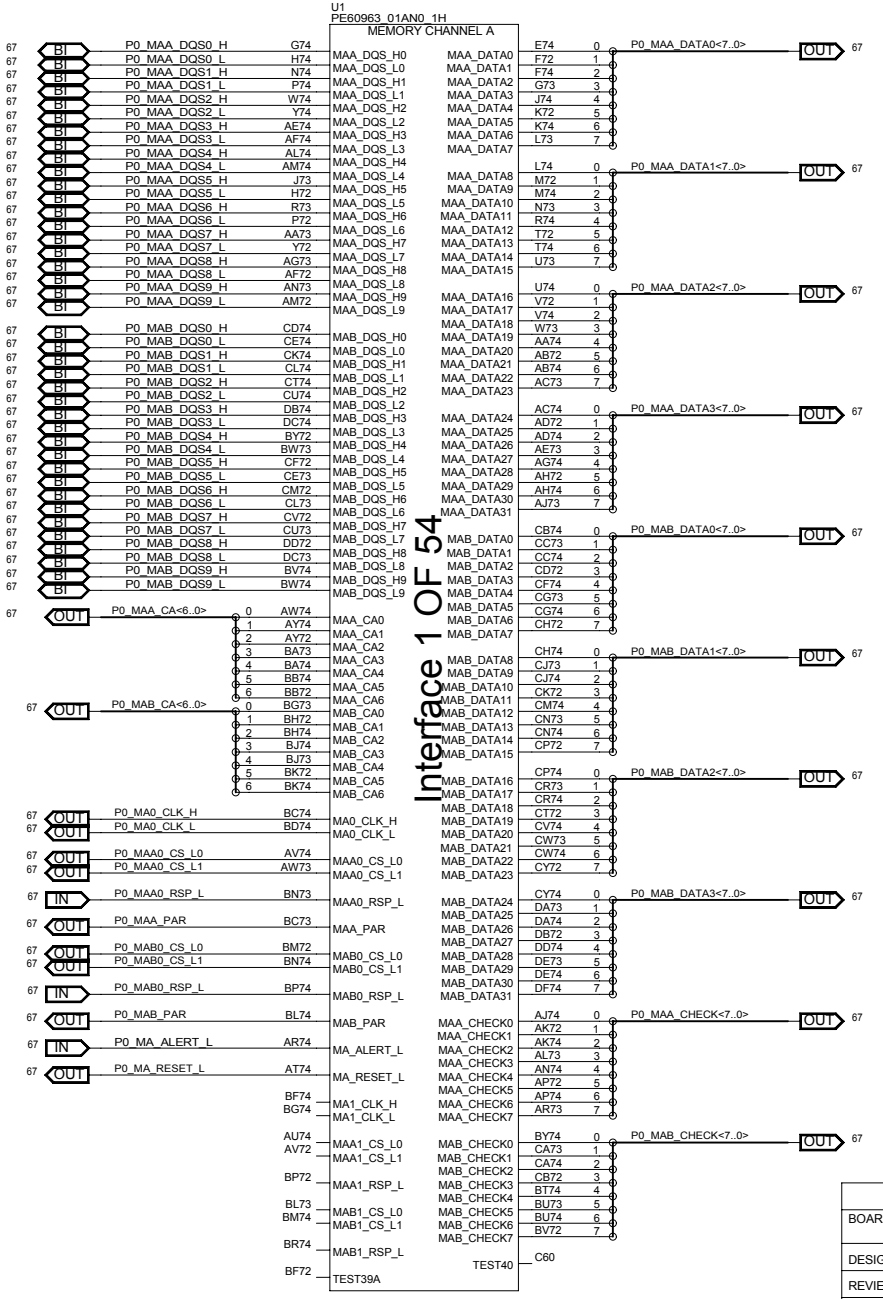

MODULE=---

FUNCTION=---

CNIT TECHNOLOGIES CO.,LTD.				
BOARD NAME BM-H14DSP_VERA			DRAWINGNO CNIT0302K1D0DL	
DESIGNED	ZHUHUI 00746	DATE 2024/10/22	SHEET 17 OF 276	REV
REVIEWED	GUBIN 00260	DATE 2024/11/22	Thu Jan 02 17:29:54 2025	

THIS DOCUMENT AND THE TECHNICAL DATA DISCLOSED ARE PROPRIETARY TO CNIT TECHNOLOGIES CO., LTD. AND SHALL NOT BE DUPLICATED USED RELEASED OR DISCLOSED WITHOUT EXPRESSING WRITTEN PERMISSION.

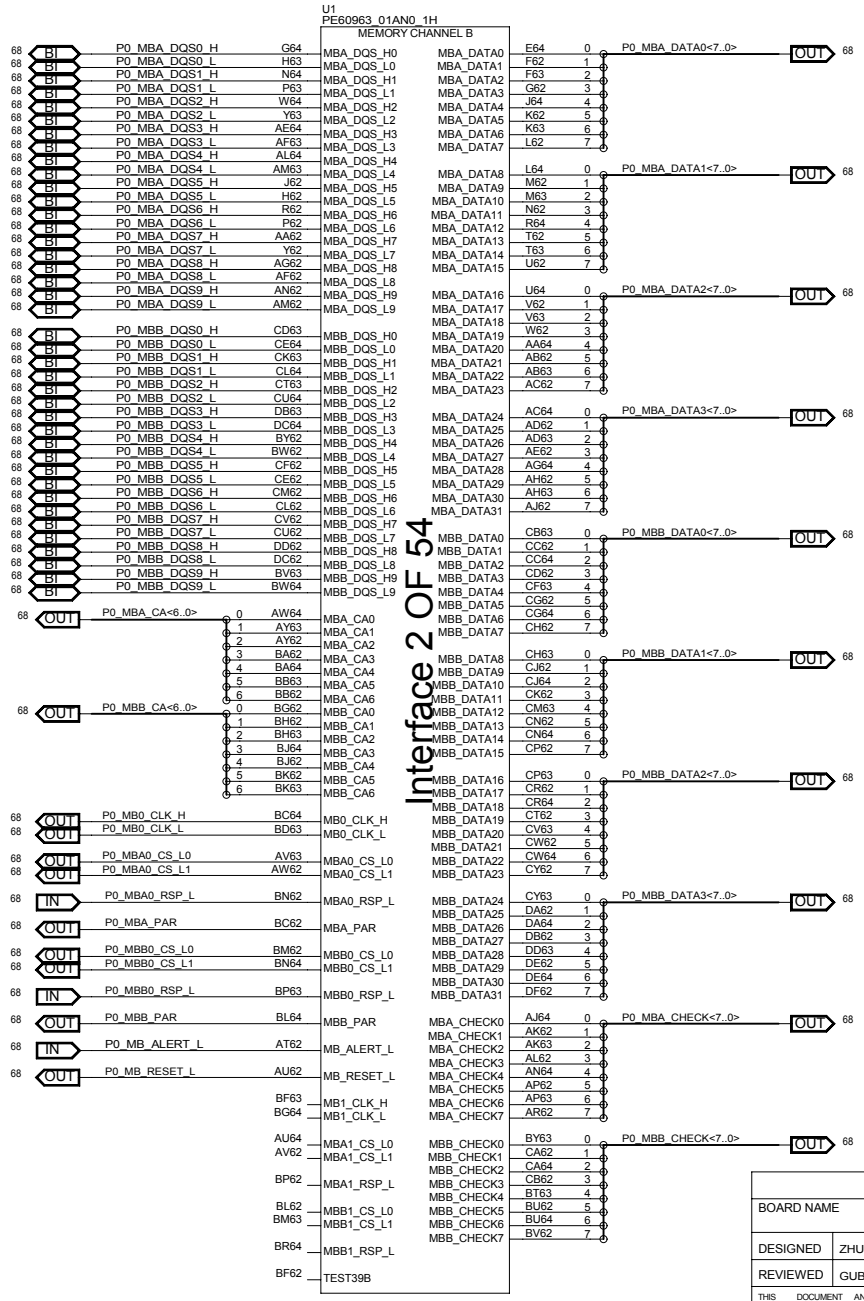

MODULE=---

FUNCTION=---

CNIT TECHNOLOGIES CO.,LTD.				
BOARD NAME BM-H14DSP_VERA			DRAWINGNO CNIT0302K1D0DL	
DESIGNED	ZHUHUI 00746	DATE 2024/10/22	SHEET 18 OF 276	REV
REVIEWED	GUBIN 00260	DATE 2024/11/22	Tue Dec 17 11:36:47 2024	

THIS DOCUMENT AND THE TECHNICAL DATA DISCLOSED ARE PROPRIETARY TO CNIT TECHNOLOGIES CO., LTD. AND SHALL NOT BE DUPLICATED USED RELEASED OR DISCLOSED WITHOUT EXPRESSING WRITTEN PERMISSION.

MODULE=---

FUNCTION=---

CNIT TECHNOLOGIES CO.,LTD.				
BOARD NAME BM-H14DSP_VERA			DRAWINGNO CNIT0302K1D0DL	
DESIGNED	ZHUHUI 00746	DATE 2024/10/22	SHEET 19 OF 276	REV
REVIEWED	GUBIN 00260	DATE 2024/11/22	Thu Jan 02 17:29:49 2025	

THIS DOCUMENT AND THE TECHNICAL DATA DISCLOSED ARE PROPRIETARY TO CNIT TECHNOLOGIES CO., LTD. AND SHALL NOT BE DUPLICATED USED RELEASED OR DISCLOSED WITHOUT EXPRESSING WRITTEN PERMISSION.

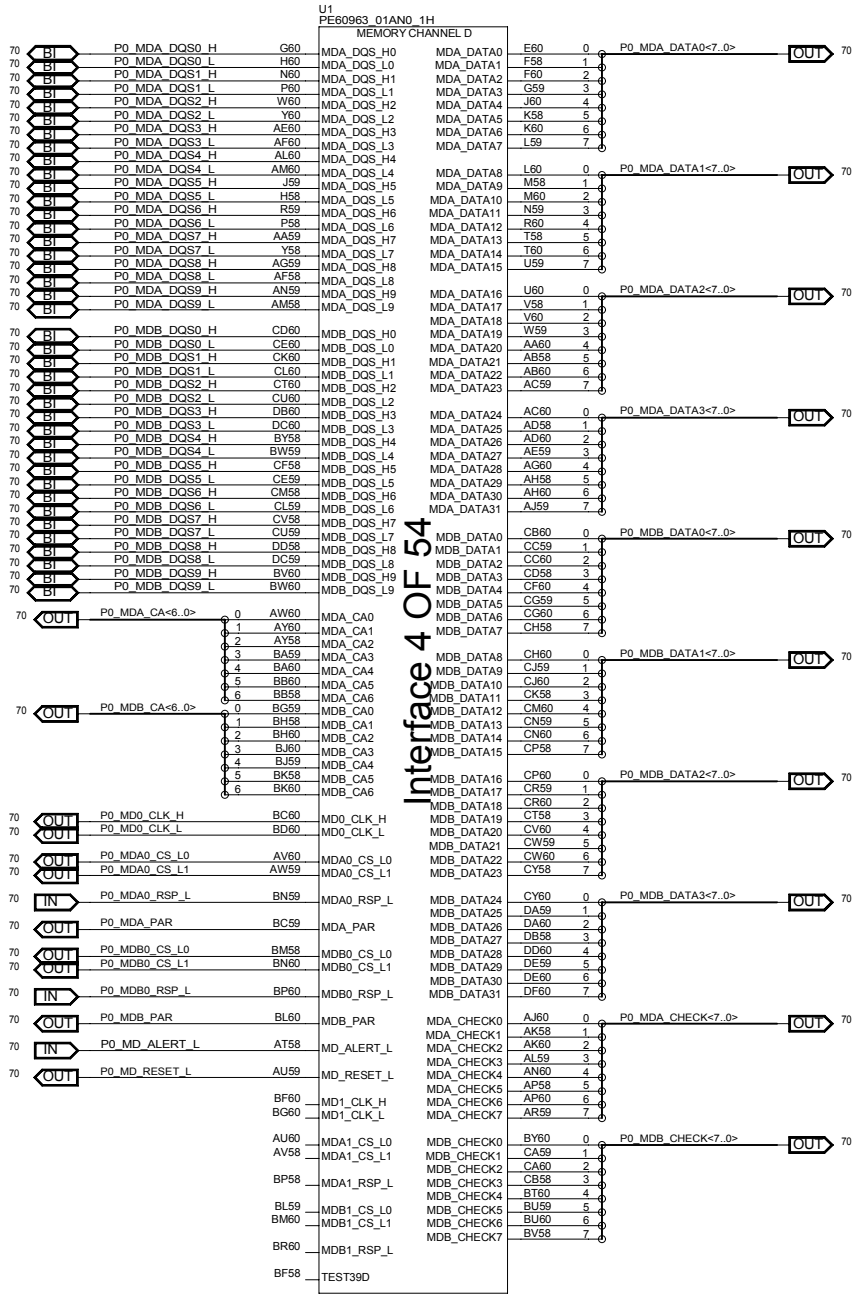

CNIT TECHNOLOGIES CO.,LTD.				
BOARD NAME BM-H14DSP_VERA			DRAWINGNO CNIT0302K1D0DL	
DESIGNED	ZHUHUI 00746	DATE 2024/10/22	SHEET 20 OF 276	REV
REVIEWED	GUBIN 00260	DATE 2024/11/22	Thu Jan 02 17:29:59 2025	

THIS DOCUMENT AND THE TECHNICAL DATA DISCLOSED ARE PROPRIETARY TO CNIT TECHNOLOGIES CO., LTD. AND SHALL NOT BE DUPLICATED USED RELEASED OR DISCLOSED WITHOUT EXPRESSING WRITTEN PERMISSION.

MODULE=---

FUNCTION=---

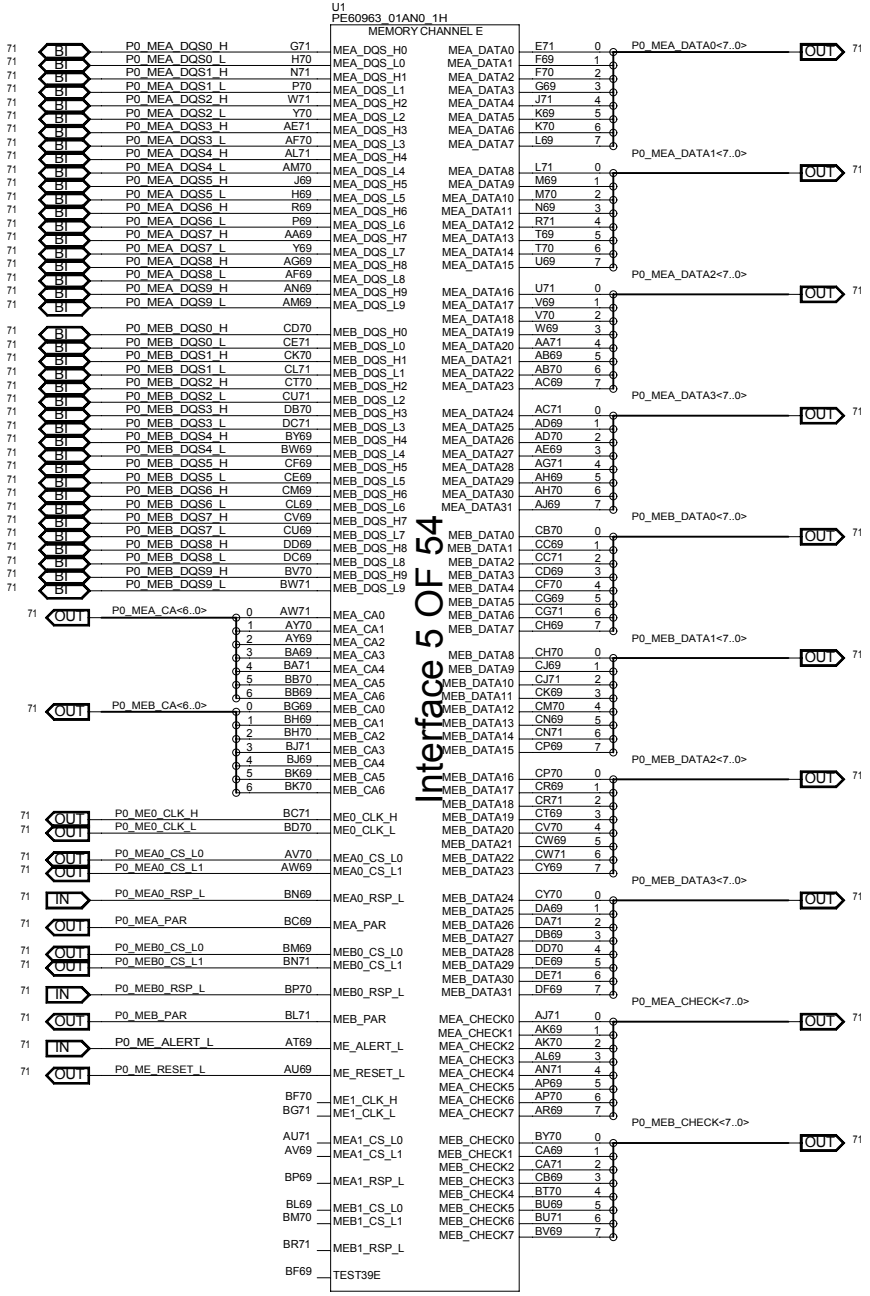

MODULE=---

FUNCTION=---

CNIT TECHNOLOGIES CO.,LTD.				
BOARD NAME BM-H14DSP_VERA			DRAWINGNO CNIT0302K1D0DL	
DESIGNED	ZHUHUI 00746	DATE 2024/10/22	SHEET 21 OF 276	REV
REVIEWED	GUBIN 00260	DATE 2024/11/22	Thu Jan 02 17:30:04 2025	

THIS DOCUMENT AND THE TECHNICAL DATA DISCLOSED ARE PROPRIETARY TO CNIT TECHNOLOGIES CO., LTD. AND SHALL NOT BE DUPLICATED USED RELEASED OR DISCLOSED WITHOUT EXPRESSING WRITTEN PERMISSION.

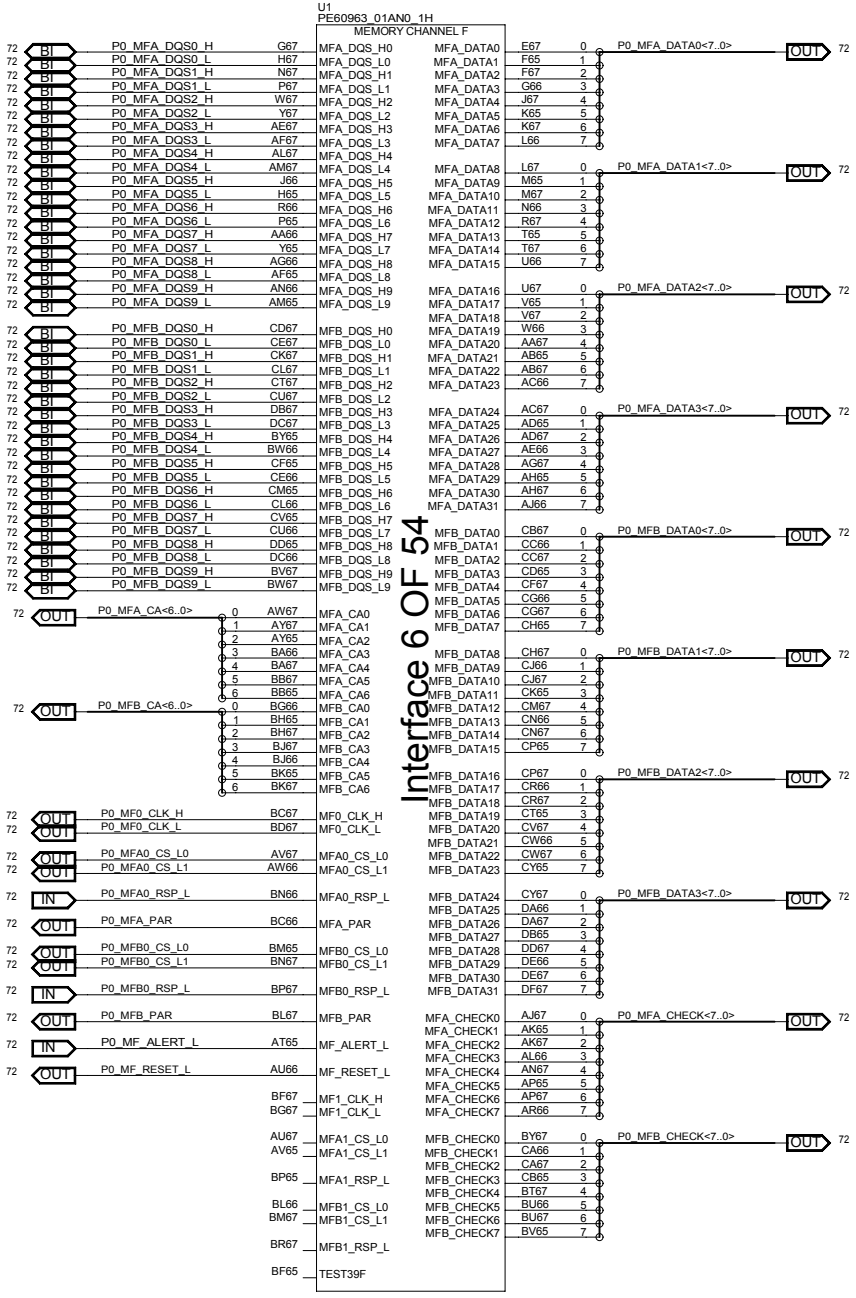

MODULE=---

FUNCTION=---

CNIT TECHNOLOGIES CO.,LTD.				
BOARD NAME BM-H14DSP_VERA			DRAWINGNO CNIT0302K1D0DL	
DESIGNED	ZHUHUI 00746	DATE 2024/10/22	SHEET 22 OF 276	REV
REVIEWED	GUBIN 00260	DATE 2024/11/22	Thu Jan 02 17:30:09 2025	

THIS DOCUMENT AND THE TECHNICAL DATA DISCLOSED ARE PROPRIETARY TO CNIT TECHNOLOGIES CO., LTD. AND SHALL NOT BE DUPLICATED USED RELEASED OR DISCLOSED WITHOUT EXPRESSING WRITTEN PERMISSION.

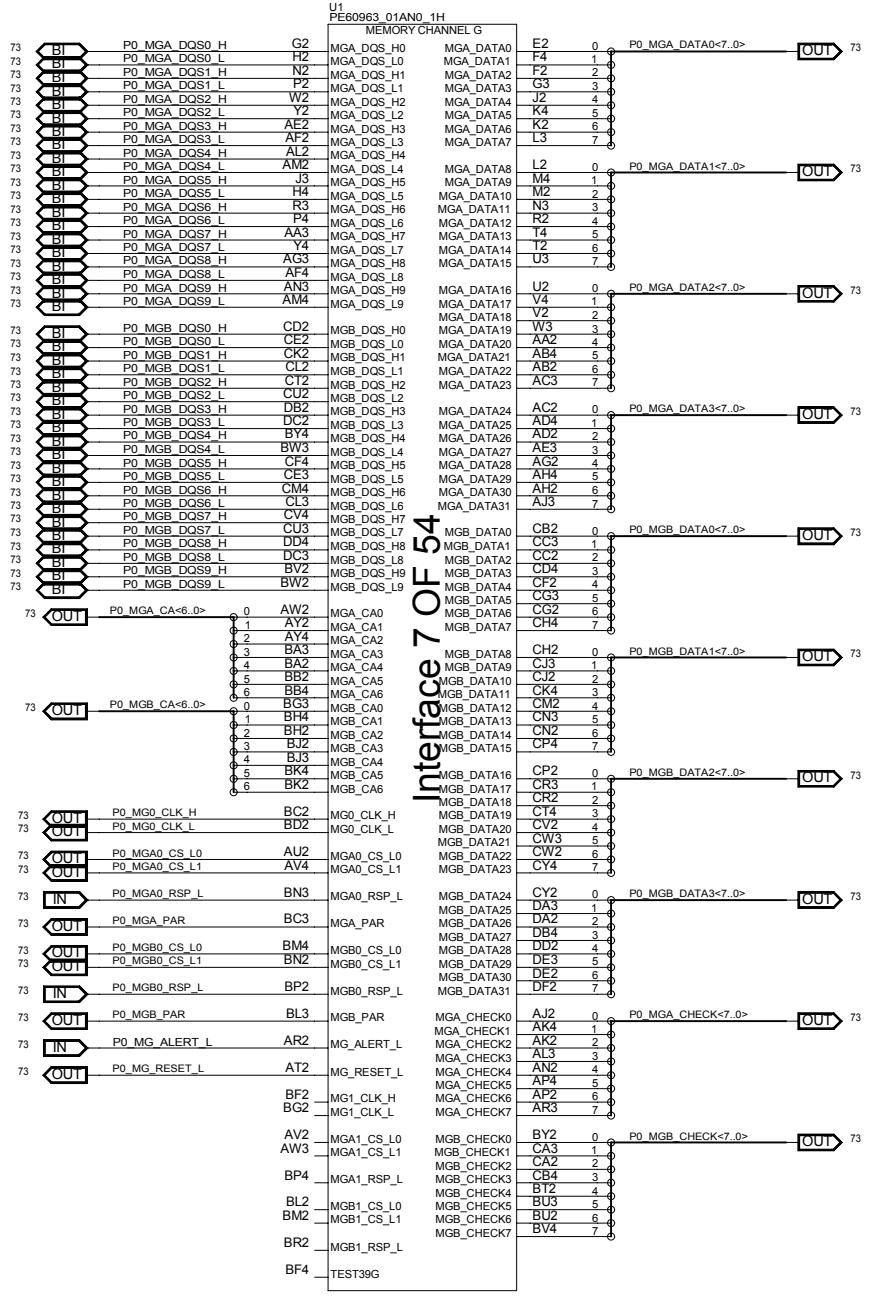

MODULE=---

FUNCTION=---

CNIT TECHNOLOGIES CO.,LTD.				
BOARD NAME BM-H14DSP_VERA			DRAWINGNO CNIT0302K1D0DL	
DESIGNED	ZHUHUI 00746	DATE 2024/10/22	SHEET 23 OF 276	REV
REVIEWED	GUBIN 00260	DATE 2024/11/22	Tue Dec 17 11:36:55 2024	

THIS DOCUMENT AND THE TECHNICAL DATA DISCLOSED ARE PROPRIETARY TO CNIT TECHNOLOGIES CO., LTD. AND SHALL NOT BE DUPLICATED USED RELEASED OR DISCLOSED WITHOUT EXPRESSING WRITTEN PERMISSION.

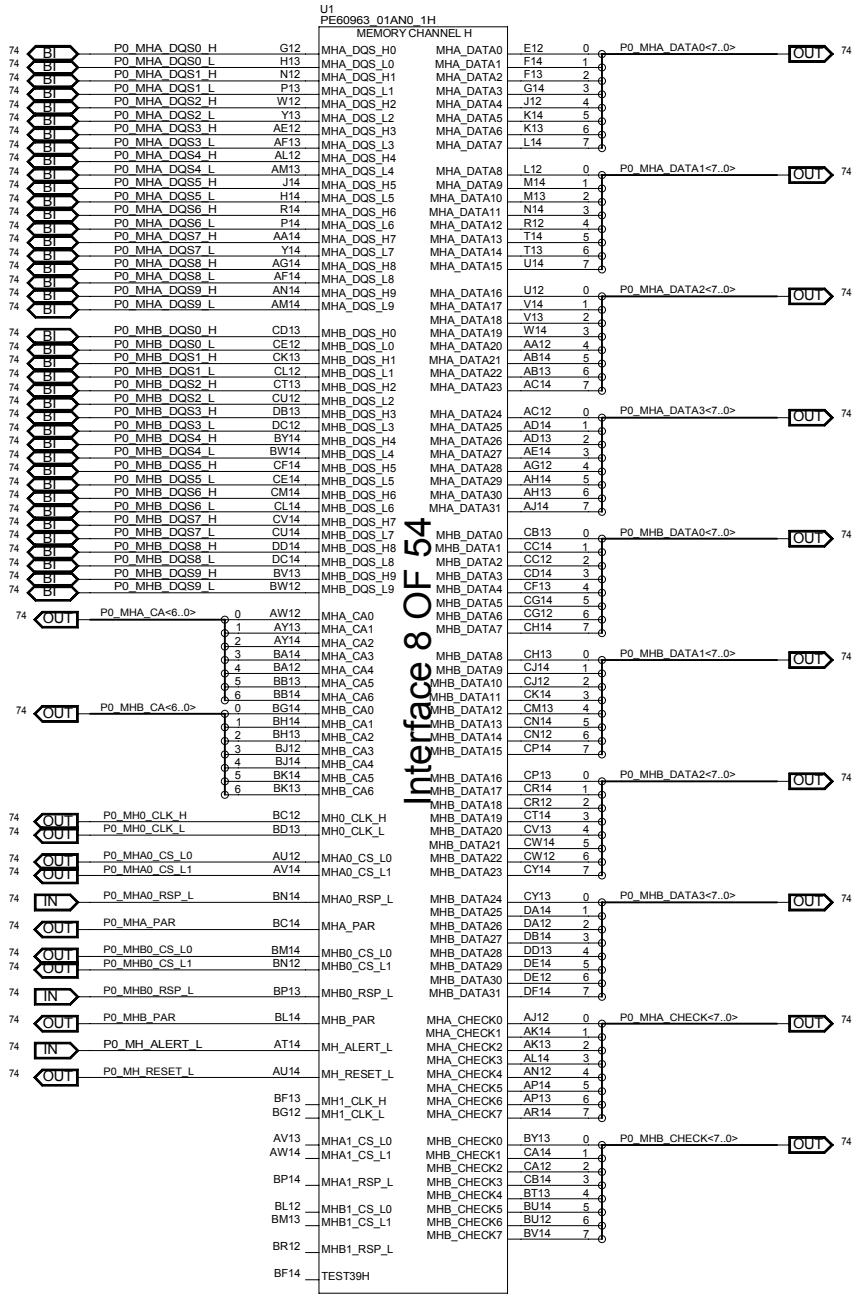

MODULE=---

FUNCTION=---

CNIT TECHNOLOGIES CO.,LTD.				
BOARD NAME BM-H14DSP_VERA			DRAWINGNO CNIT0302K1D0DL	
DESIGNED	ZHUHUI 00746	DATE 2024/10/22	SHEET 24 OF 276	REV
REVIEWED	GUBIN 00260	DATE 2024/11/22	Thu Jan 02 17:30:14 2025	

THIS DOCUMENT AND THE TECHNICAL DATA DISCLOSED ARE PROPRIETARY TO CNIT TECHNOLOGIES CO., LTD. AND SHALL NOT BE DUPLICATED USED RELEASED OR DISCLOSED WITHOUT EXPRESSING WRITTEN PERMISSION.

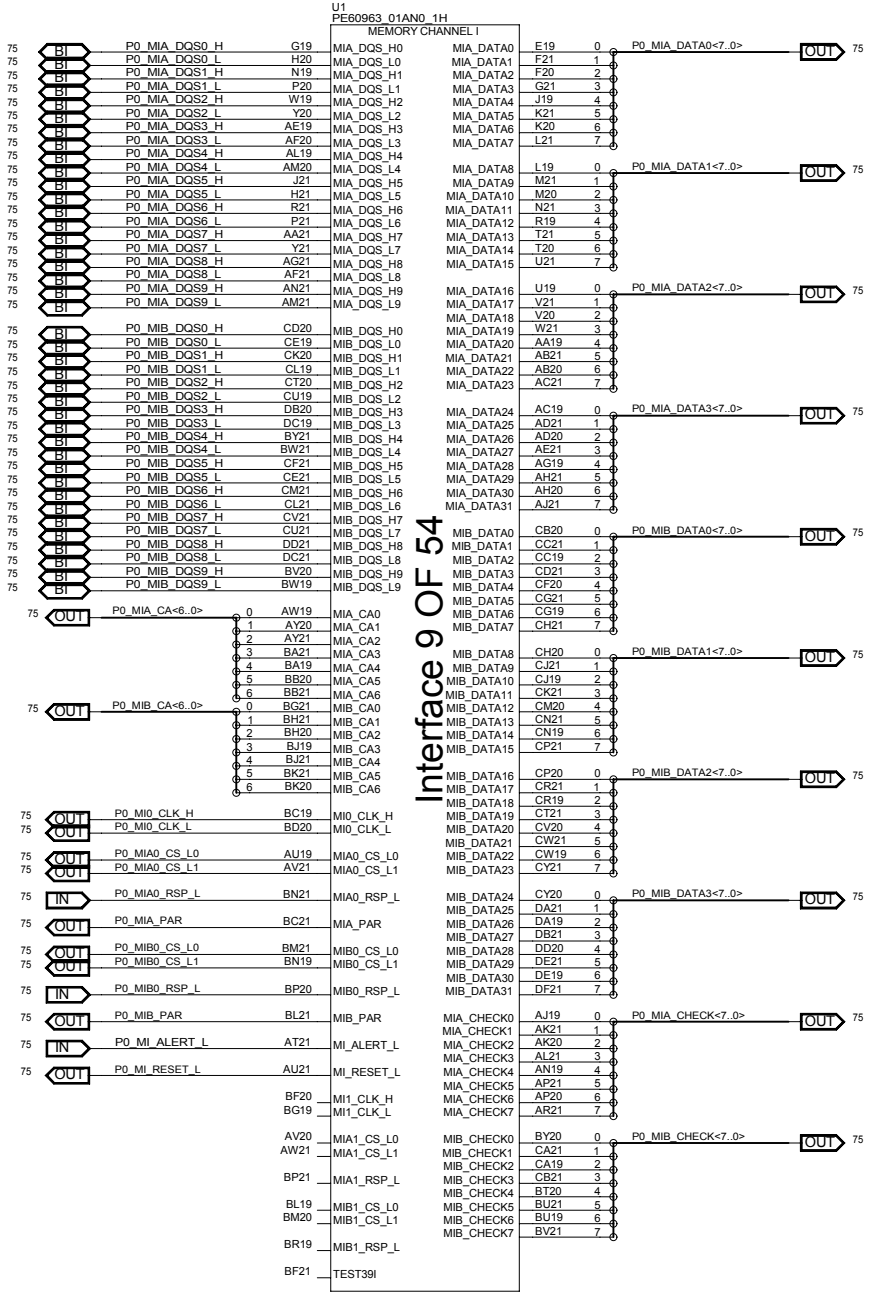

MODULE=---

FUNCTION=---

CNIT TECHNOLOGIES CO.,LTD.				
BOARD NAME BM-H14DSP_VERA			DRAWINGNO CNIT0302K1D0DL	
DESIGNED	ZHUHUI 00746	DATE 2024/10/22	SHEET 25 OF 276	REV
REVIEWED	GUBIN 00260	DATE 2024/11/22	Thu Jan 02 17:30:20 2025	

THIS DOCUMENT AND THE TECHNICAL DATA DISCLOSED ARE PROPRIETARY TO CNIT TECHNOLOGIES CO., LTD. AND SHALL NOT BE DUPLICATED USED RELEASED OR DISCLOSED WITHOUT EXPRESSING WRITTEN PERMISSION.

MODULE=---

FUNCTION=---

CNIT TECHNOLOGIES CO.,LTD.				
BOARD NAME BM-H14DSP_VERA			DRAWINGNO CNIT0302K1D0DL	
DESIGNED	ZHUHUI 00746	DATE 2024/10/22	SHEET 26 OF 276	REV
REVIEWED	GUBIN 00260	DATE 2024/11/22	Thu Jan 02 17:30:25 2025	

THIS DOCUMENT AND THE TECHNICAL DATA DISCLOSED ARE PROPRIETARY TO CNIT TECHNOLOGIES CO., LTD. AND SHALL NOT BE DUPLICATED USED RELEASED OR DISCLOSED WITHOUT EXPRESSING WRITTEN PERMISSION.

MODULE=---

FUNCTION=---

CNIT TECHNOLOGIES CO.,LTD.				
BOARD NAME BM-H14DSP_VERA			DRAWINGNO CNIT0302K1D0DL	
DESIGNED	ZHUHUI 00746	DATE 2024/10/22	SHEET 27 OF 276	REV
REVIEWED	GUBIN 00260	DATE 2024/11/22	Thu Jan 02 17:30:30 2025	

THIS DOCUMENT AND THE TECHNICAL DATA DISCLOSED ARE PROPRIETARY TO CNIT TECHNOLOGIES CO., LTD. AND SHALL NOT BE DUPLICATED USED RELEASED OR DISCLOSED WITHOUT EXPRESSING WRITTEN PERMISSION.

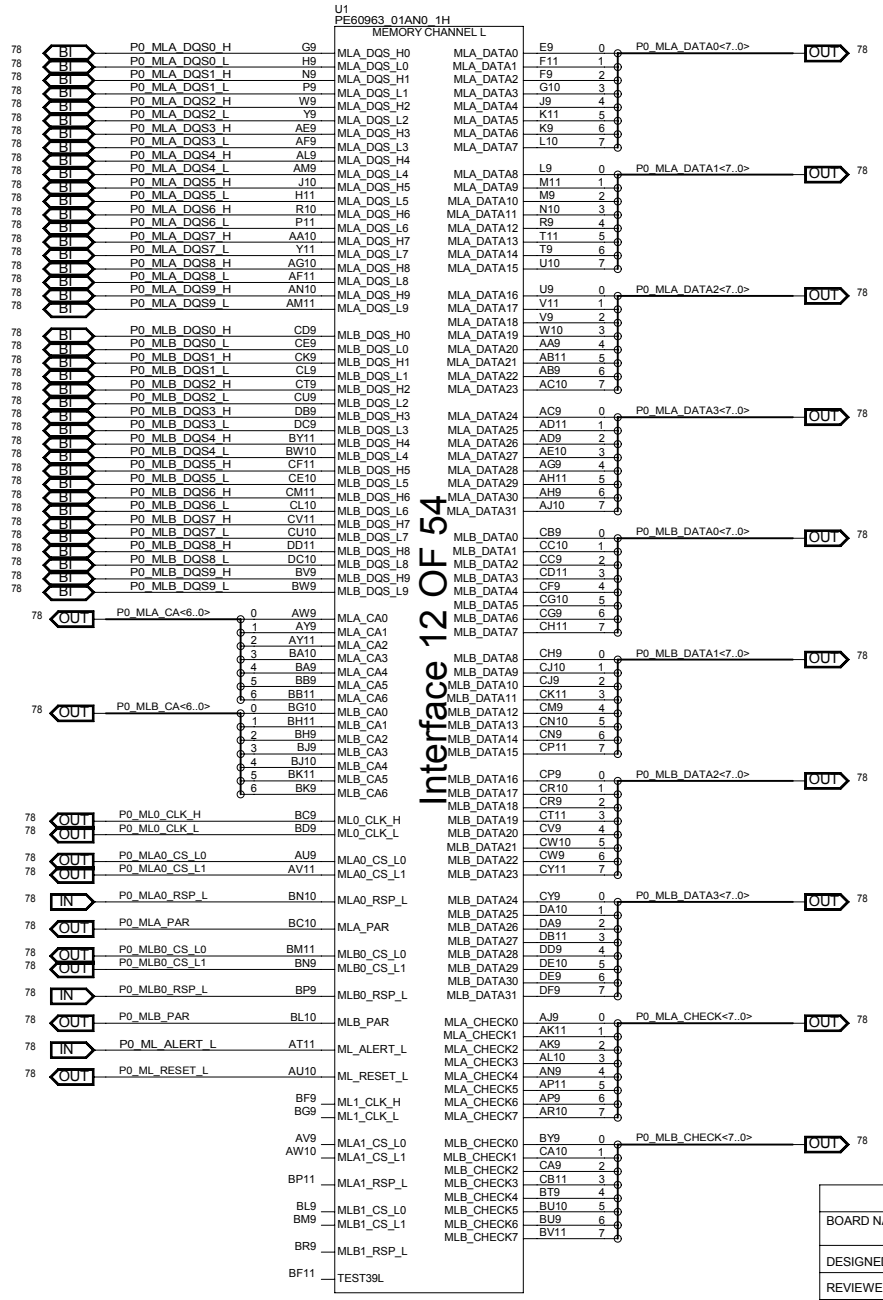

MODULE=---

FUNCTION=---

CNIT TECHNOLOGIES CO.,LTD.				
BOARD NAME BM-H14DSP_VERA			DRAWINGNO CNIT0302K1D0DL	
DESIGNED	ZHUHUI 00746	DATE 2024/10/22	SHEET 28 OF 276	REV
REVIEWED	GUBIN 00260	DATE 2024/11/22	Thu Jan 02 17:30:35 2025	

THIS DOCUMENT AND THE TECHNICAL DATA DISCLOSED ARE PROPRIETARY TO CNIT TECHNOLOGIES CO., LTD. AND SHALL NOT BE DUPLICATED USED RELEASED OR DISCLOSED WITHOUT EXPRESSING WRITTEN PERMISSION.

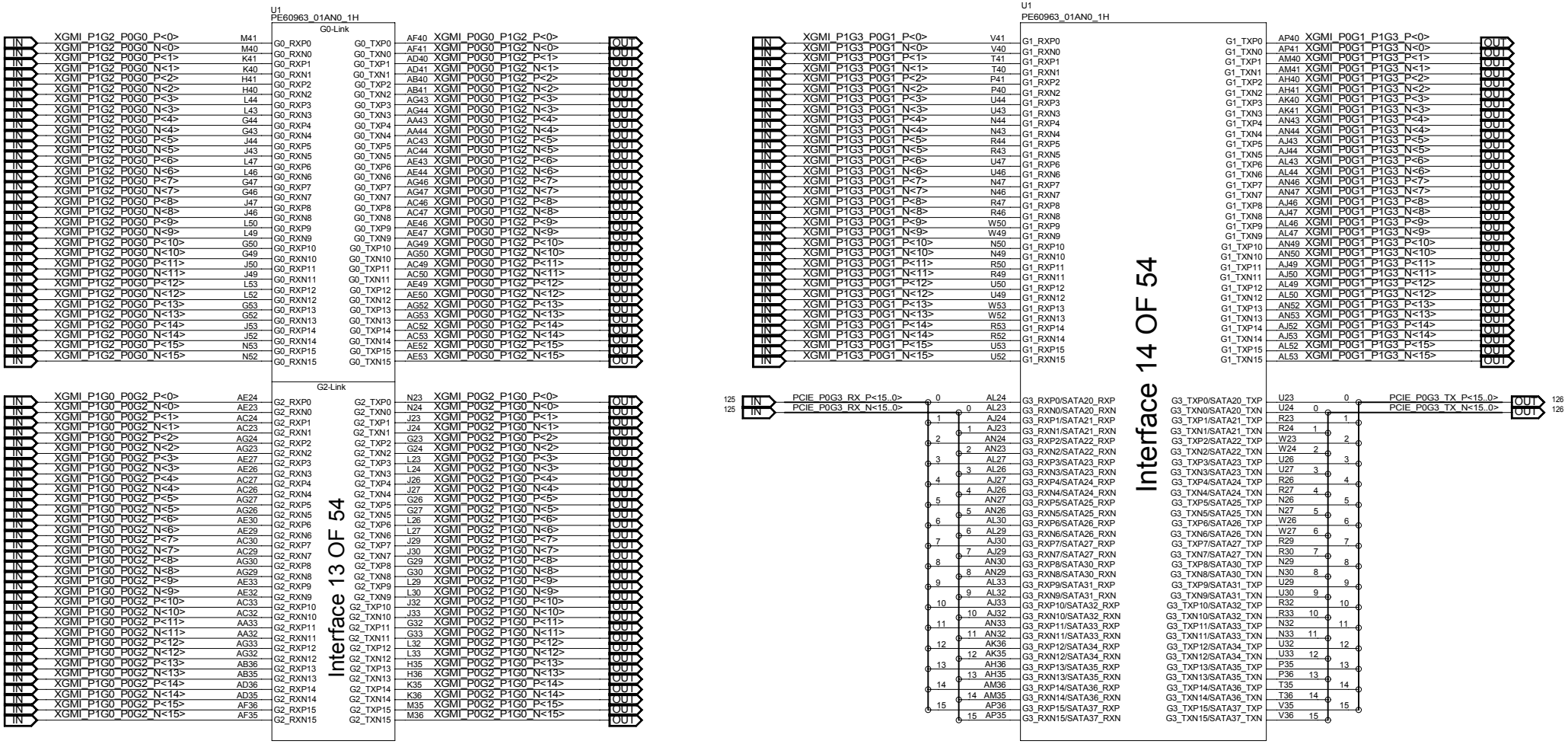

P0 GLink 0 <=> P1 GLink 2

P0 GLink 2 <=> P1 GLink 0

P0 GLINK 1<=> MCIO

P0 GLINK 3 <=> MCIO

MODULE=---

FUNCTION=---

CNIT TECHNOLOGIES CO.,LTD.

BOARD NAME	BM-H14DSP_VERA	DRAWINGNO	CNIT0302K1D0DL
DESIGNED	ZHUHUI 00746	DATE 2024/10/22	SHEET 29 OF 276
REVIEWED	GUBIN 00260	DATE 2024/11/22	Tue Dec 17 11:37:05 2024

REV

THIS DOCUMENT AND THE TECHNICAL DATA DISCLOSED ARE PROPRIETARY TO CNIT TECHNOLOGIES CO., LTD. AND SHALL NOT BE DUPLICATED USED RELEASED OR DISCLOSED WITHOUT EXPRESSING WRITTEN PERMISSION.

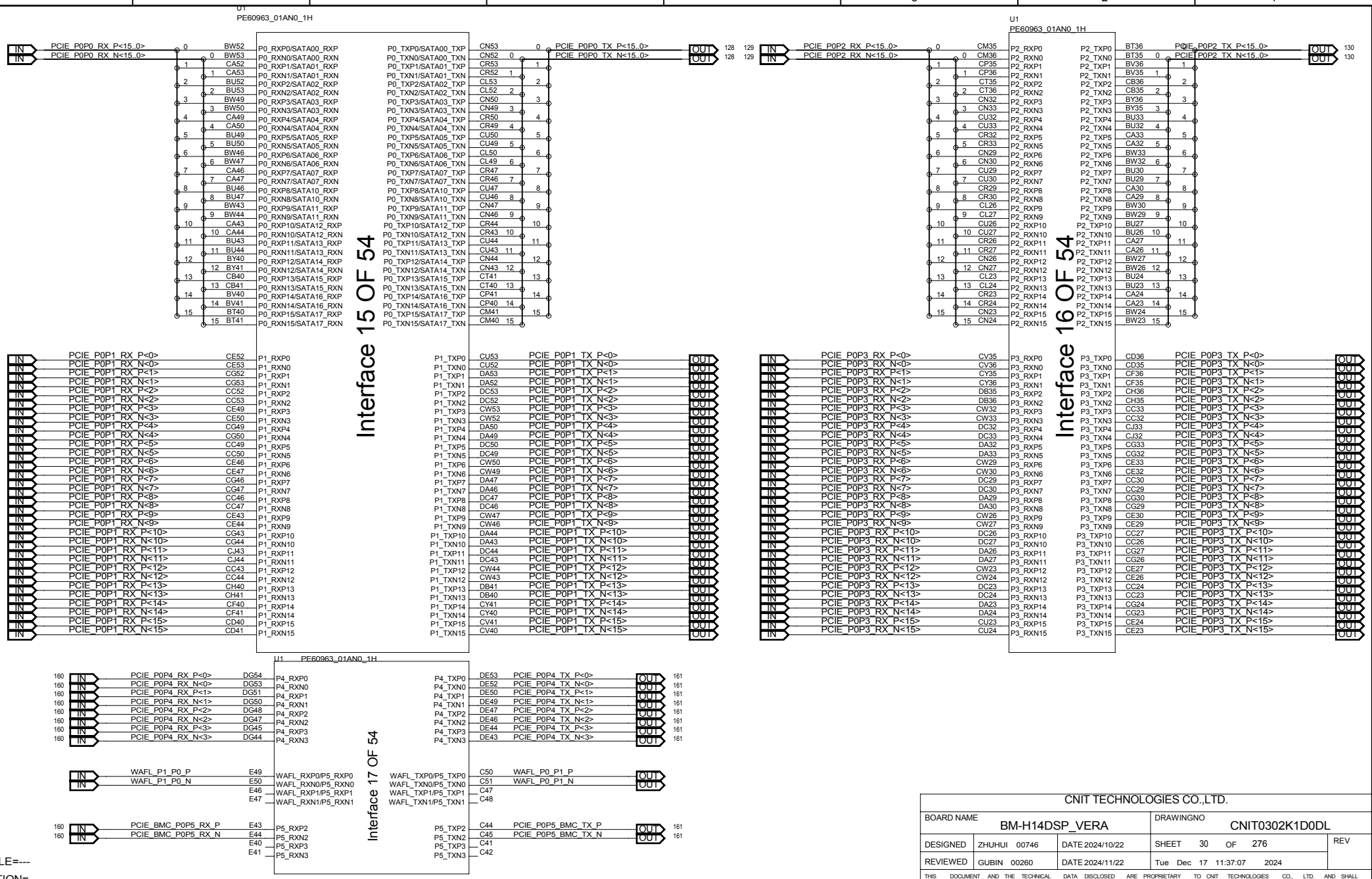

CNIT TECHNOLOGIES CO.,LTD.				
BOARD NAME BM-H14DSP_VERA			DRAWINGNO CNIT0302K1D0DL	
DESIGNED	ZHUHUI 00746	DATE 2024/10/22	SHEET 30 OF 276	REV
REVIEWED	GUBIN 00260	DATE 2024/11/22	Tue Dec 17 11:37:07 2024	

THIS DOCUMENT AND THE TECHNICAL DATA DISCLOSED ARE PROPRIETARY TO CNIT TECHNOLOGIES CO., LTD. AND SHALL NOT BE DUPLICATED USED RELEASED OR DISCLOSED WITHOUT EXPRESSING WRITTEN PERMISSION.

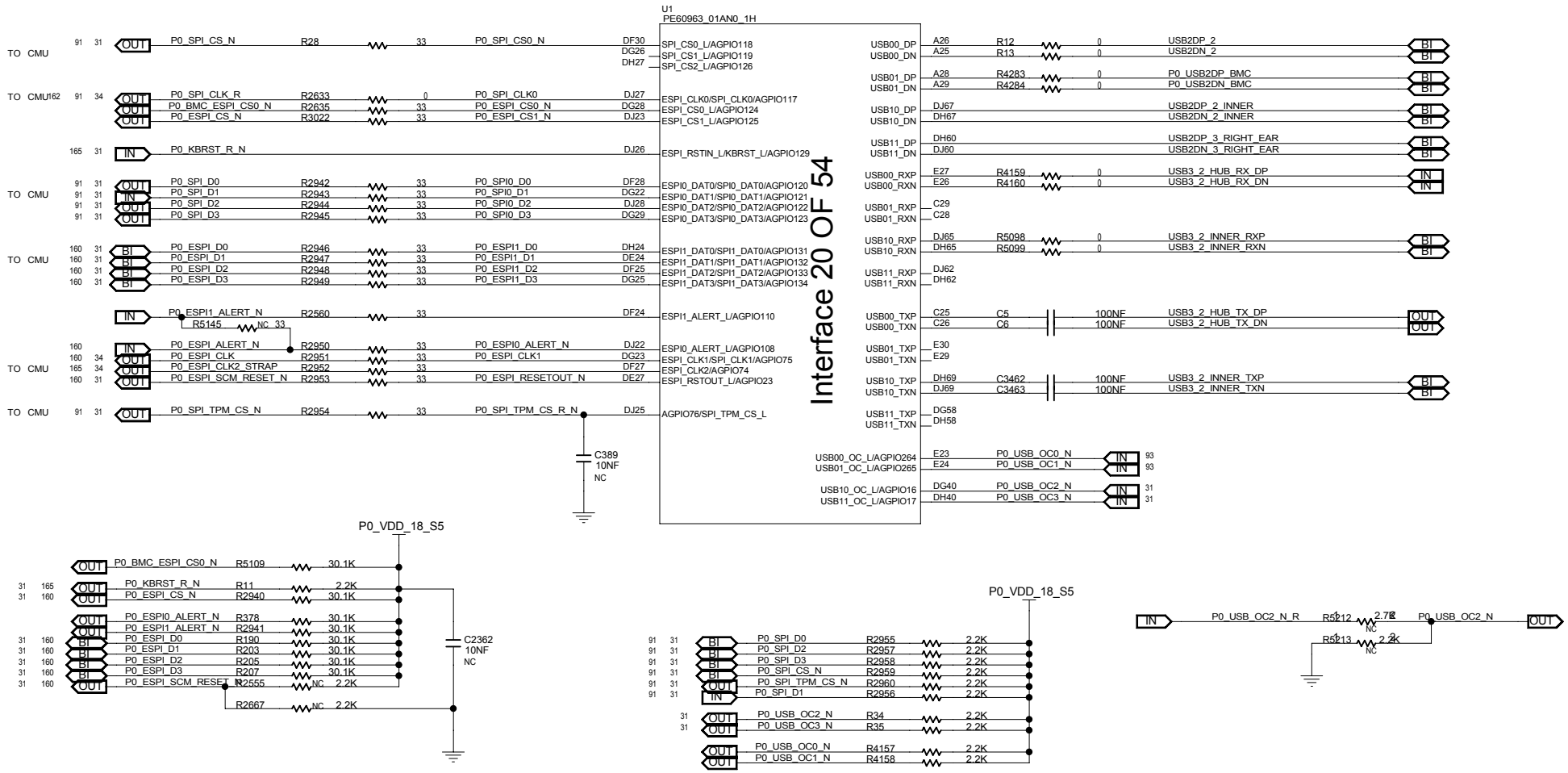

MODULE=---

FUNCTION=---

CNIT TECHNOLOGIES CO.,LTD.				
BOARD NAME BM-H14DSP_VERA			DRAWINGNO CNIT0302K1D0DL	
DESIGNED	ZHUHUI 00746	DATE 2024/10/22	SHEET 31 OF 276	REV
REVIEWED	GUBIN 00260	DATE 2024/11/22	Wed Jan 08 21:11:14 2025	

THIS DOCUMENT AND THE TECHNICAL DATA DISCLOSED ARE PROPRIETARY TO CNIT TECHNOLOGIES CO., LTD. AND SHALL NOT BE DUPLICATED USED RELEASED OR DISCLOSED WITHOUT EXPRESSING WRITTEN PERMISSION.

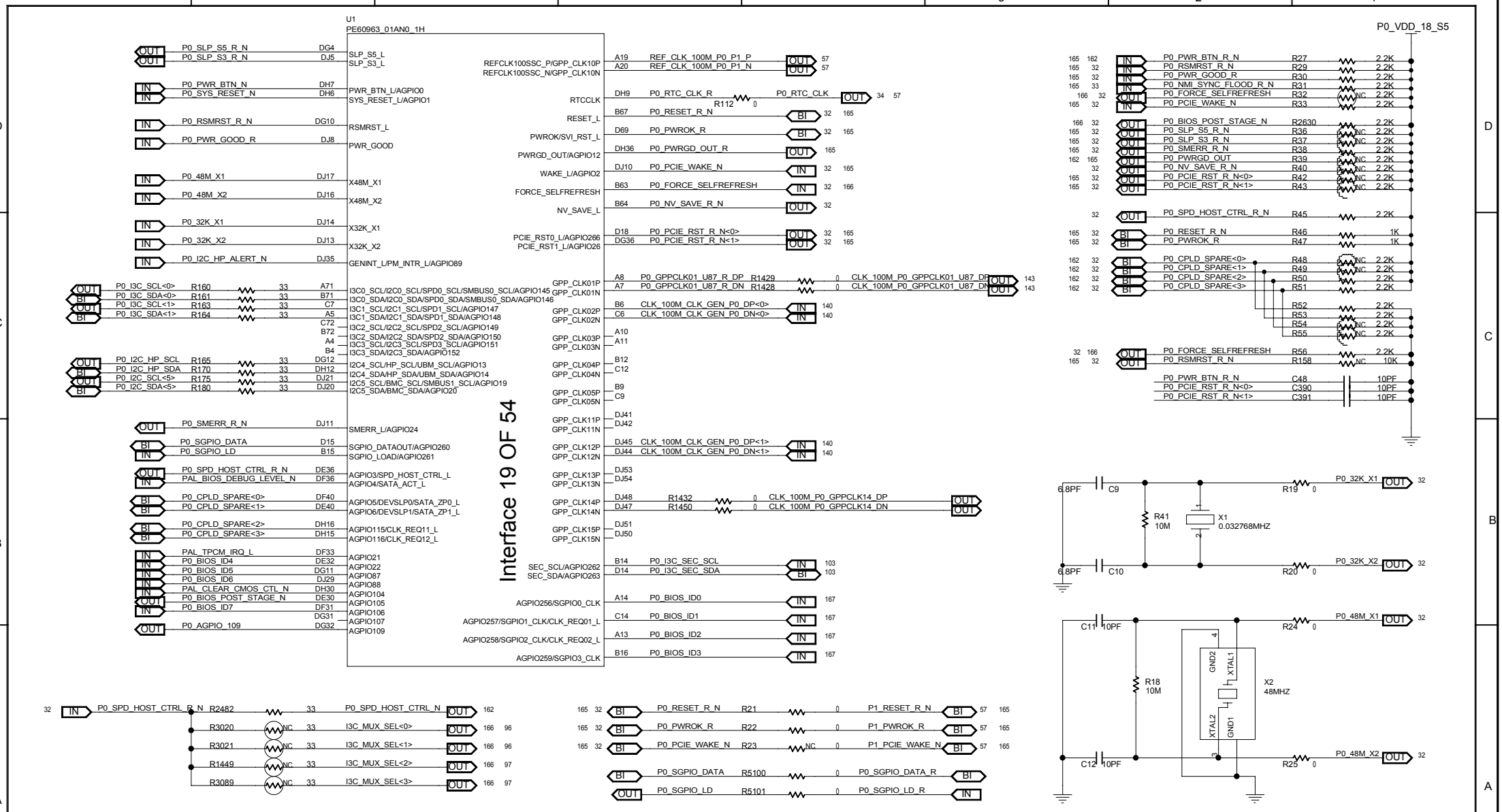

MODULE=---

FUNCTION=---

CNIT TECHNOLOGIES CO.,LTD.				
BOARD NAME BM-H14DSP_VERA			DRAWINGNO CNIT0302K1D0DL	
DESIGNED	ZHUHUI 00746	DATE 2024/10/22	SHEET 32 OF 276	REV
REVIEWED	GUBIN 00260	DATE 2024/11/22	Sun Dec 29 11:41:22 2024	

THIS DOCUMENT AND THE TECHNICAL DATA DISCLOSED ARE PROPRIETARY TO CNIT TECHNOLOGIES CO., LTD. AND SHALL NOT BE DUPLICATED USED RELEASED OR DISCLOSED WITHOUT EXPRESSING WRITTEN PERMISSION.

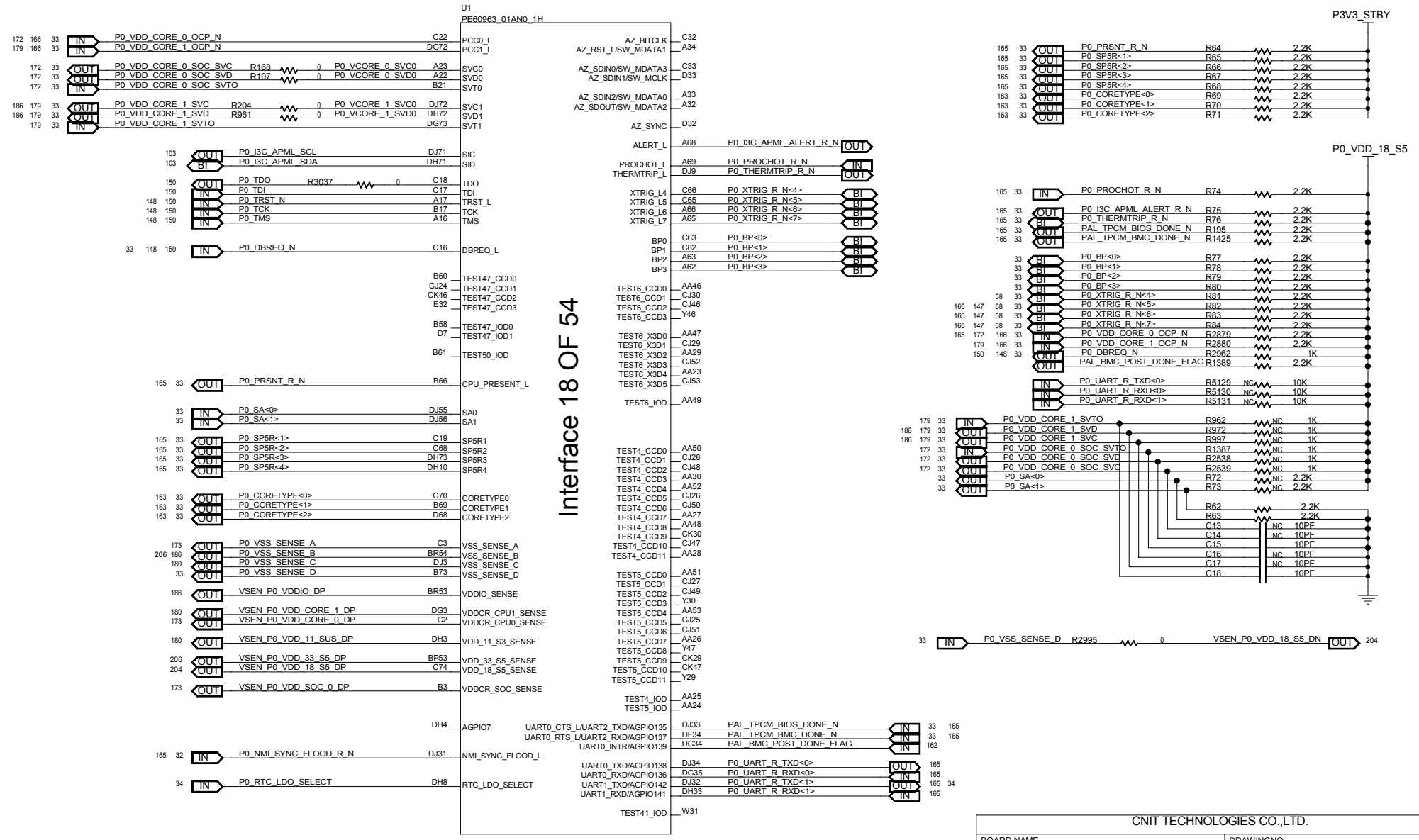

MODULE=---

FUNCTION=---

CNIT TECHNOLOGIES CO.,LTD.				
BOARD NAME BM-H14DSP_VERA			DRAWINGNO CNIT0302K1D0DL	
DESIGNED	ZHUHUI 00746	DATE 2024/10/22	SHEET 33 OF 276	REV
REVIEWED	GUBIN 00260	DATE 2024/11/22	Sat Dec 28 17:51:17 2024	

THIS DOCUMENT AND THE TECHNICAL DATA DISCLOSED ARE PROPRIETARY TO CNIT TECHNOLOGIES CO., LTD. AND SHALL NOT BE DUPLICATED USED RELEASED OR DISCLOSED WITHOUT EXPRESSING WRITTEN PERMISSION.

EVT CHANGE BY W00209,P0_SPI_CLK_R ADD TO CPLD CONTROLLING STRAP

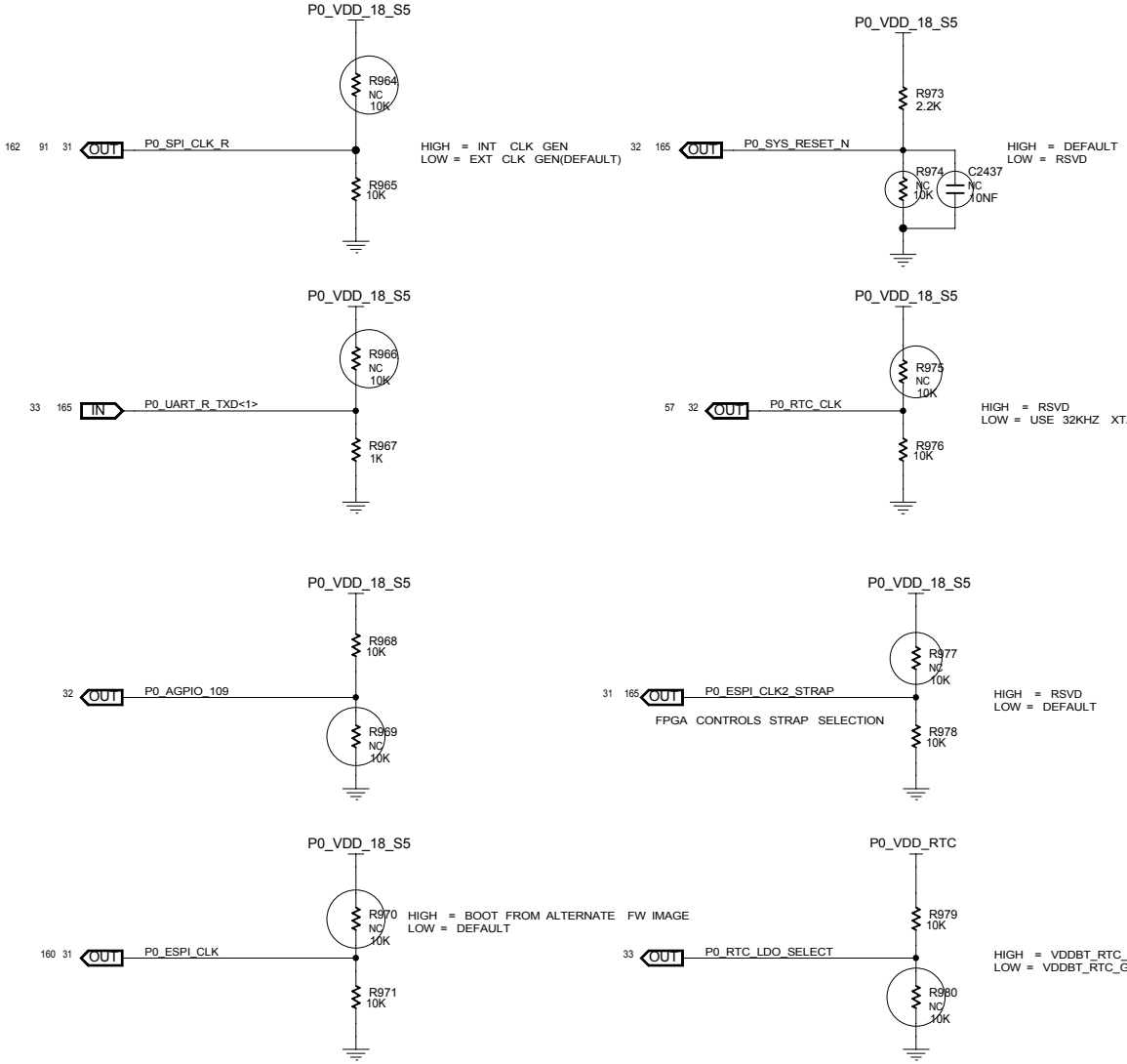

PIN NAME	INTERNAL PU/PD	CPU0(DEFAULT)	CPU1(DEFAULT)	DESCRIPTION
ESPI_CLK0/SPI_CLK0/AGPIO117	PD	0	0	CLKGEN SELECTION 0: EXTERNAL CLKGEN MODE 1: INTERNAL CLKGEN MODE
UART1_TXD/AGPIO142	PU	0	0	ROMTYPE[1:0] 01: SPI ROM 00: RSVD
AGPIO109	PU	1	0	1X: ESPI
ESPI_CLK1/SPI_CLK1/AGPIO75	PD	0	0	ALTERNATE IMAGE 0: TOP HALF 64MB ROM 1: BOTTOM HALF 64MB ROM
RTCCLK	PD	0	0	BYPASS RTC 0: NORMAL MODE, 32KHZ XTAL AS SOURCE 1: RTCCLK IS INPUT & USED AS BYPASS CLK
ESPI_CLK2/AGPIO74	PD	0	0	RSVD

MODULE=---

FUNCTION=---

CNIT TECHNOLOGIES CO.,LTD.

BOARD NAME	BM-H14DSP_VERA		DRAWINGNO	CNIT0302K1D0DL	
DESIGNED	ZHUHUI 00746	DATE 2024/10/22	SHEET 34 OF 276		REV
REVIEWED	GUBIN 00260	DATE 2024/11/22	Fri Dec 27 11:42:24 2024		

THIS DOCUMENT AND THE TECHNICAL DATA DISCLOSED ARE PROPRIETARY TO CNIT TECHNOLOGIES CO., LTD. AND SHALL NOT BE DUPLICATED USED RELEASED OR DISCLOSED WITHOUT EXPRESSING WRITTEN PERMISSION.

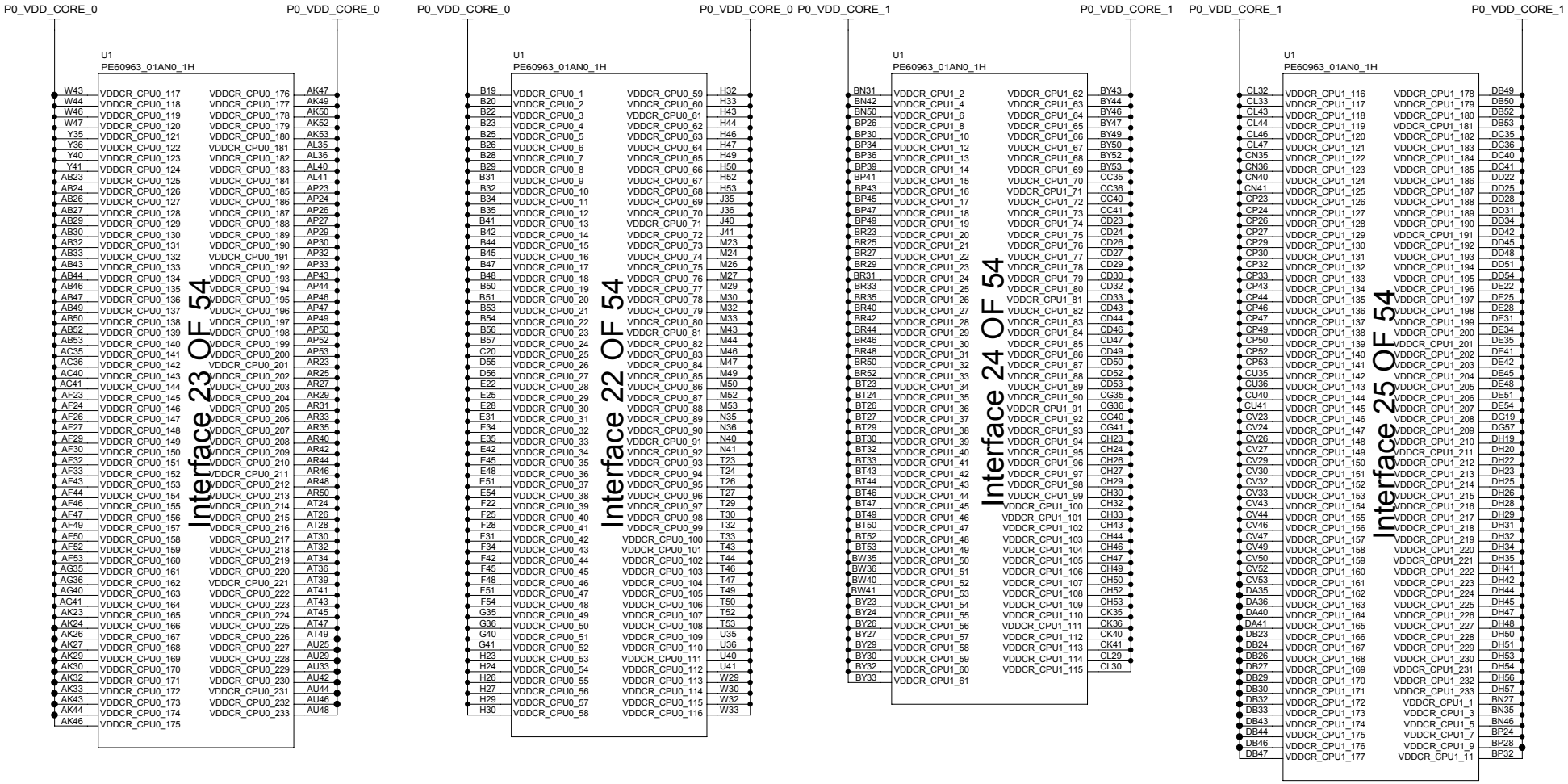

MODULE=---

FUNCTION=---

CNIT TECHNOLOGIES CO.,LTD.				
BOARD NAME BM-H14DSP_VERA			DRAWINGNO CNIT0302K1D0DL	
DESIGNED	ZHUHUI 00746	DATE 2024/10/22	SHEET 35 OF 276	REV
REVIEWED	GUBIN 00260	DATE 2024/11/22	Thu Jan 02 17:30:40 2025	

THIS DOCUMENT AND THE TECHNICAL DATA DISCLOSED ARE PROPRIETARY TO CNIT TECHNOLOGIES CO., LTD. AND SHALL NOT BE DUPLICATED USED RELEASED OR DISCLOSED WITHOUT EXPRESSING WRITTEN PERMISSION.

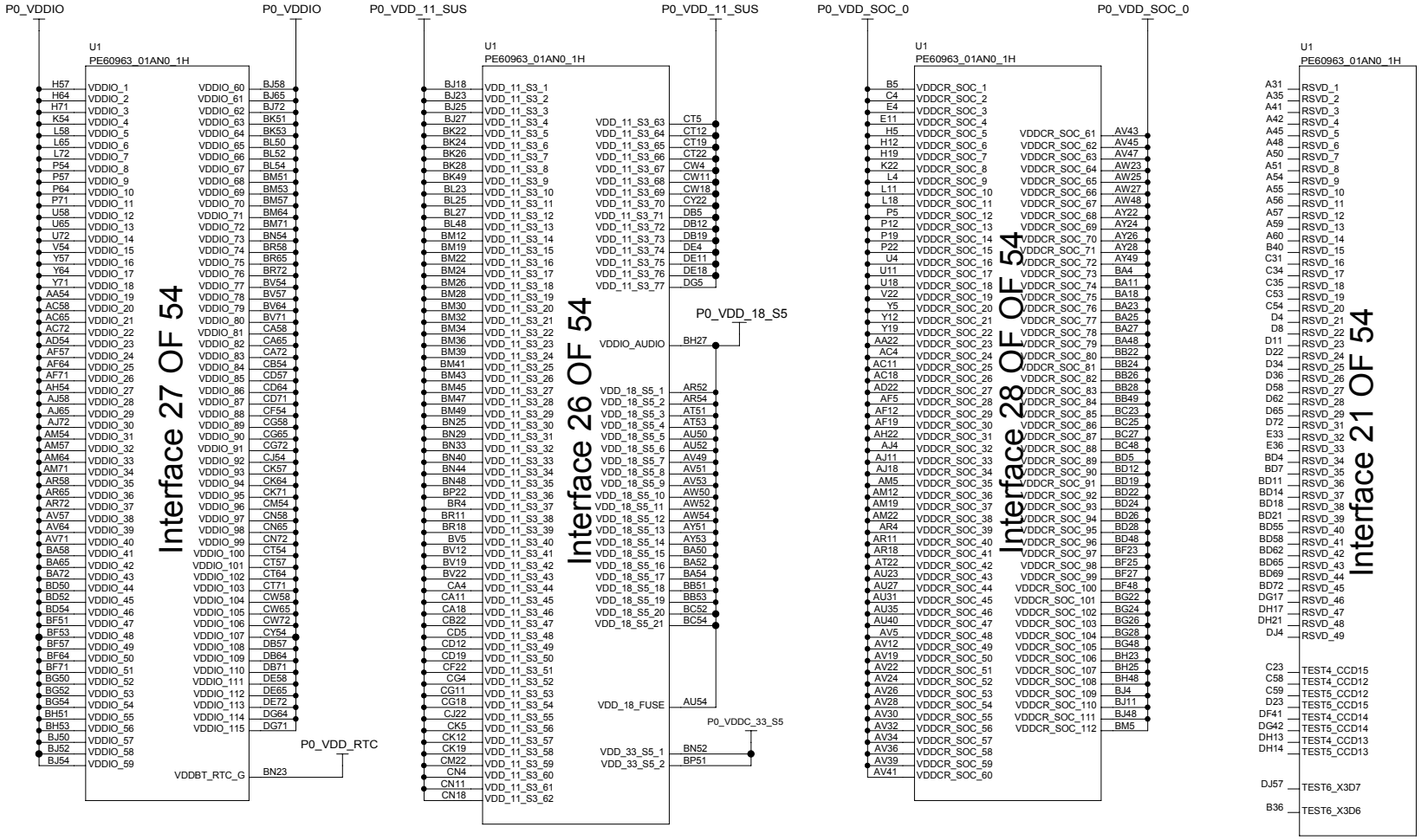

MODULE=---

FUNCTION=---

CNIT TECHNOLOGIES CO.,LTD.				
BOARD NAME BM-H14DSP_VERA			DRAWINGNO CNIT0302K1D0DL	
DESIGNED	ZHUHUI 00746	DATE 2024/10/22	SHEET 36 OF 276	REV
REVIEWED	GUBIN 00260	DATE 2024/11/22	Thu Jan 02 17:30:45 2025	

THIS DOCUMENT AND THE TECHNICAL DATA DISCLOSED ARE PROPRIETARY TO CNIT TECHNOLOGIES CO., LTD. AND SHALL NOT BE DUPLICATED USED RELEASED OR DISCLOSED WITHOUT EXPRESSING WRITTEN PERMISSION.

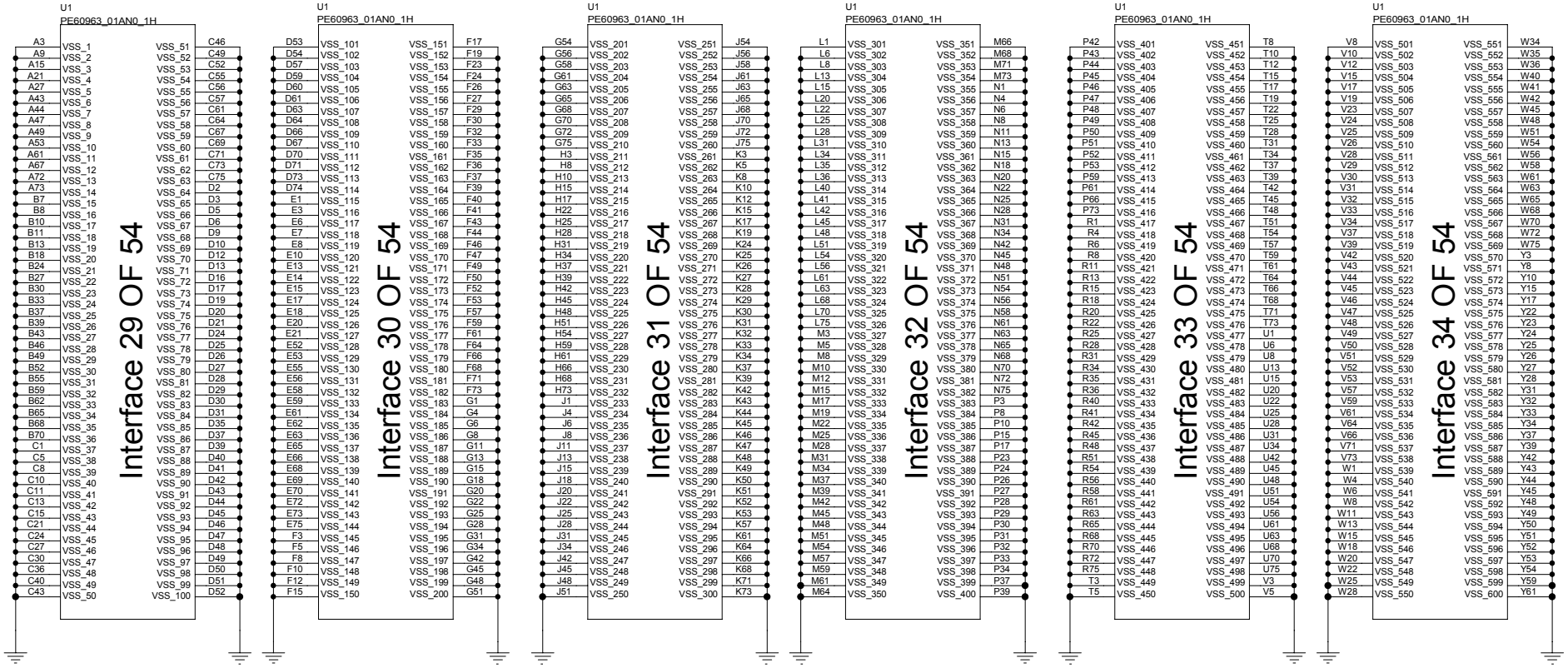

MODULE=---

FUNCTION=---

CNIT TECHNOLOGIES CO.,LTD.				
BOARD NAME BM-H14DSP_VERA			DRAWINGNO CNIT0302K1D0DL	
DESIGNED	ZHUHUI 00746	DATE 2024/10/22	SHEET 37 OF 276	REV
REVIEWED	GUBIN 00260	DATE 2024/11/22	Thu Jan 02 17:30:50 2025	

THIS DOCUMENT AND THE TECHNICAL DATA DISCLOSED ARE PROPRIETARY TO CNIT TECHNOLOGIES CO., LTD. AND SHALL NOT BE DUPLICATED USED RELEASED OR DISCLOSED WITHOUT EXPRESSING WRITTEN PERMISSION.

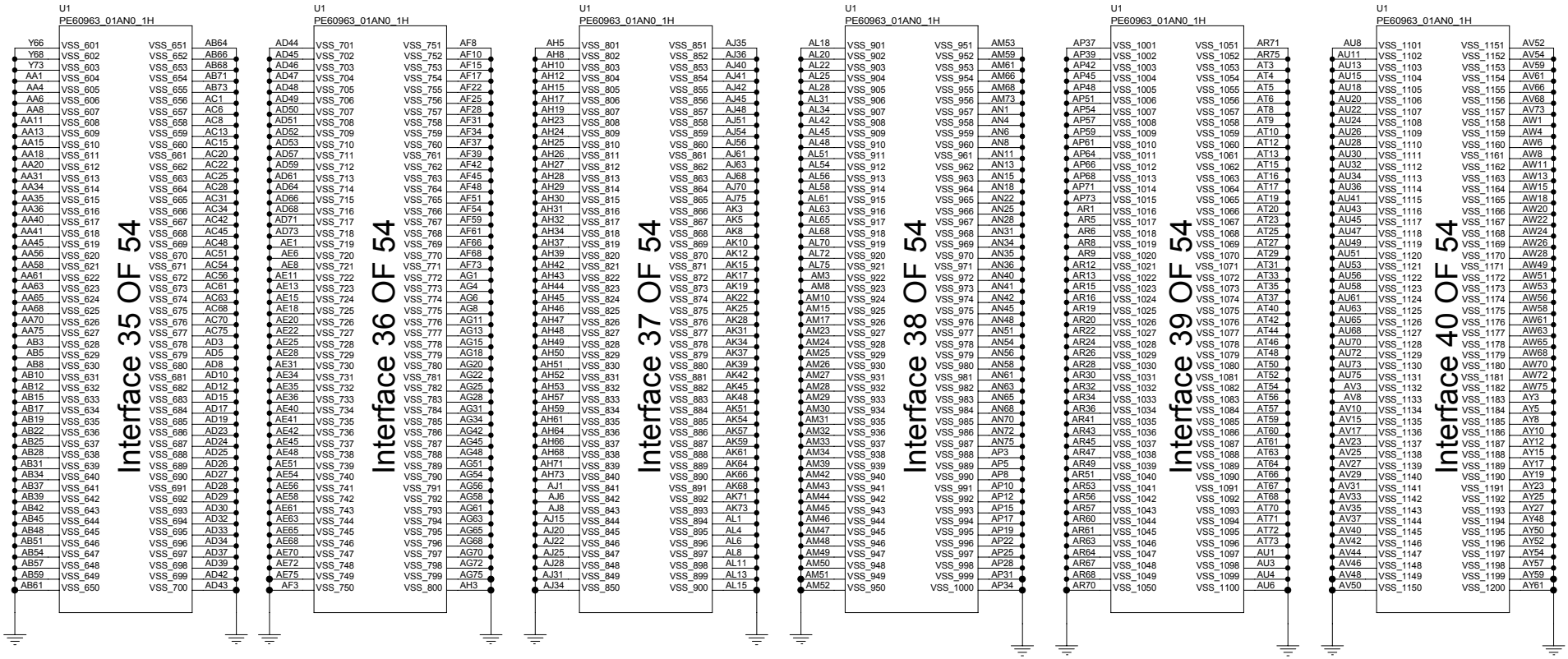

MODULE=---

FUNCTION=---

CNIT TECHNOLOGIES CO.,LTD.				
BOARD NAME BM-H14DSP_VERA			DRAWINGNO CNIT0302K1D0DL	
DESIGNED	ZHUHUI 00746	DATE 2024/10/22	SHEET 38 OF 276	REV
REVIEWED	GUBIN 00260	DATE 2024/11/22	Thu Jan 02 17:30:56 2025	

THIS DOCUMENT AND THE TECHNICAL DATA DISCLOSED ARE PROPRIETARY TO CNIT TECHNOLOGIES CO., LTD. AND SHALL NOT BE DUPLICATED USED RELEASED OR DISCLOSED WITHOUT EXPRESSING WRITTEN PERMISSION.

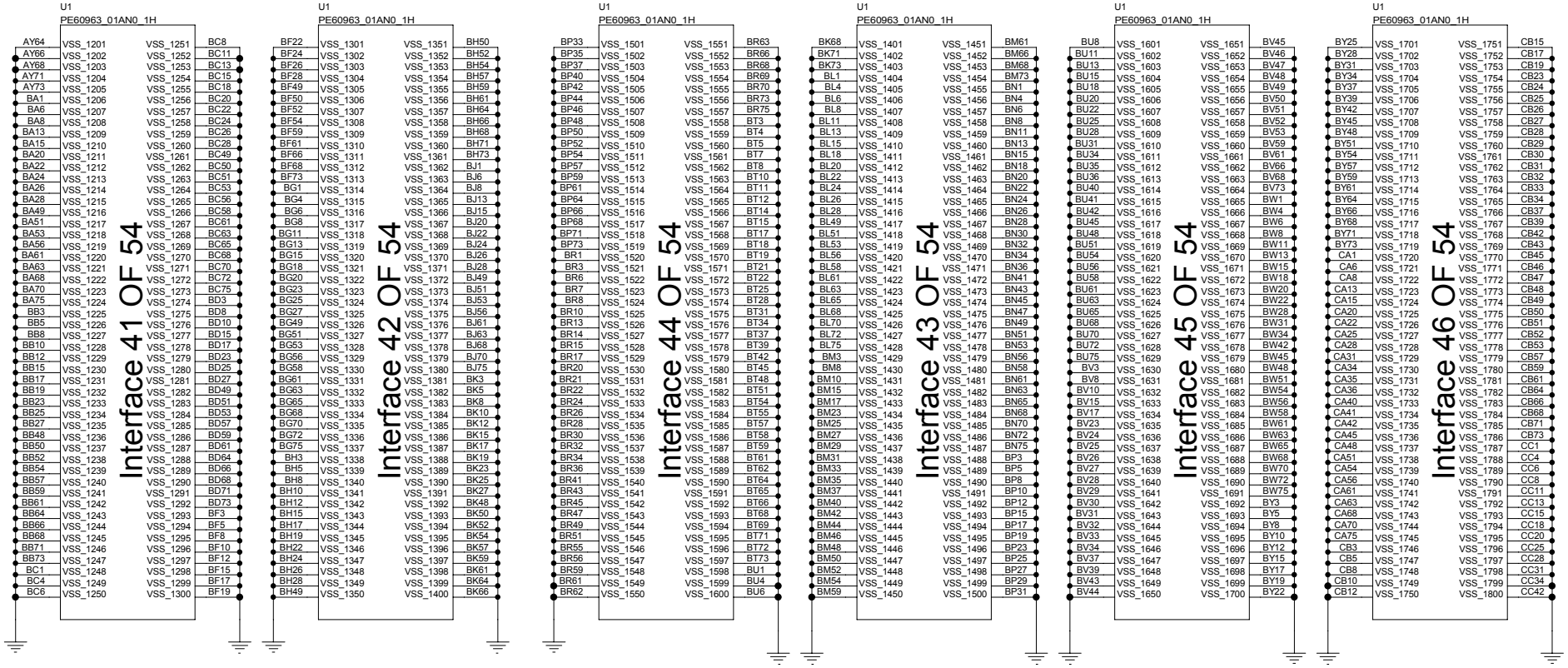

MODULE=---

FUNCTION=---

CNIT TECHNOLOGIES CO.,LTD.				
BOARD NAME BM-H14DSP_VERA			DRAWINGNO CNIT0302K1D0DL	
DESIGNED	ZHUHUI 00746	DATE 2024/10/22	SHEET 39 OF 276	REV
REVIEWED	GUBIN 00260	DATE 2024/11/22	Thu Jan 02 17:31:01 2025	

THIS DOCUMENT AND THE TECHNICAL DATA DISCLOSED ARE PROPRIETARY TO CNIT TECHNOLOGIES CO., LTD. AND SHALL NOT BE DUPLICATED USED RELEASED OR DISCLOSED WITHOUT EXPRESSING WRITTEN PERMISSION.

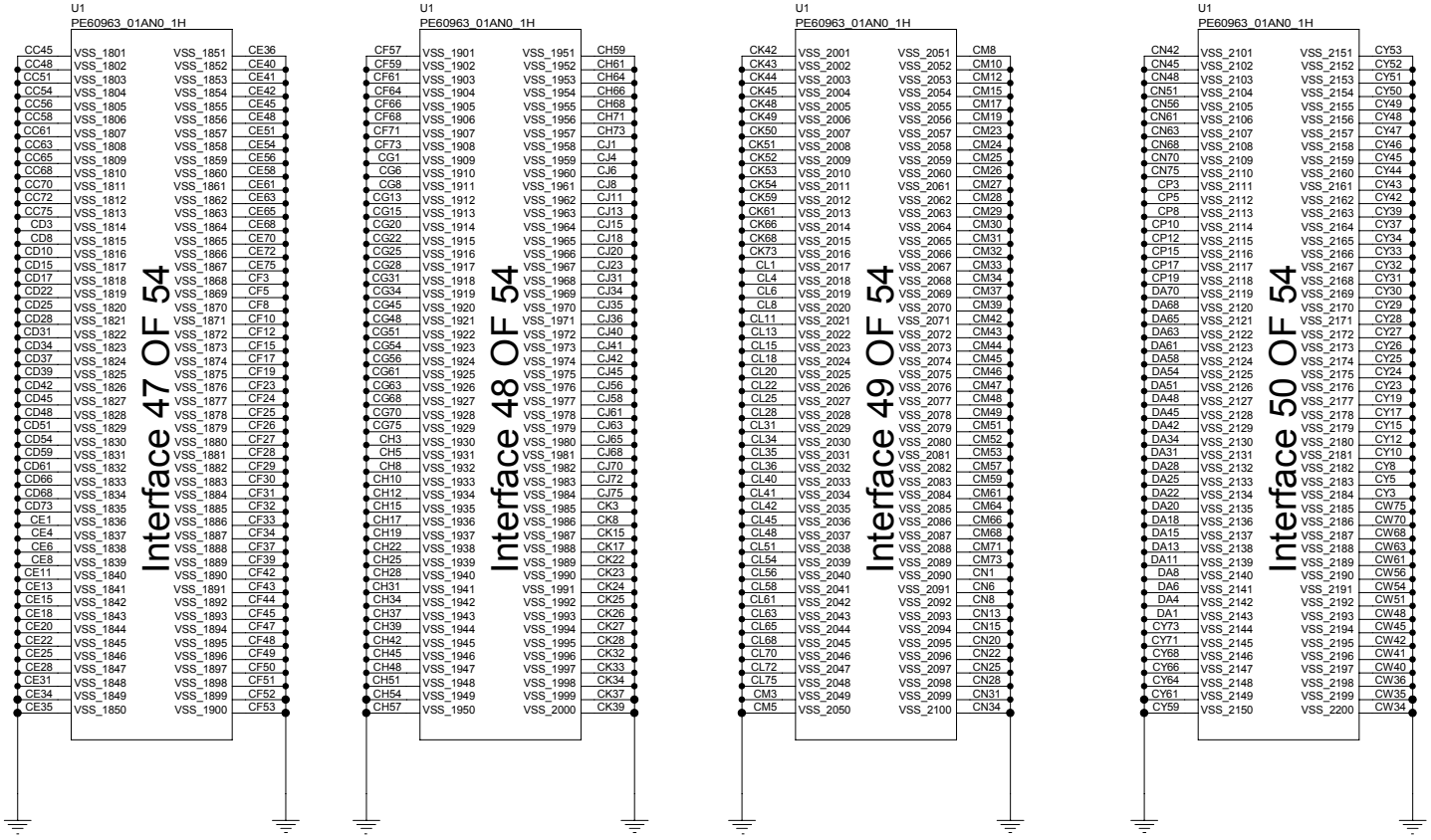

MODULE=---

FUNCTION=---

CNIT TECHNOLOGIES CO.,LTD.				
BOARD NAME BM-H14DSP_VERA			DRAWINGNO CNIT0302K1D0DL	
DESIGNED	ZHUHUI 00746	DATE 2024/10/22	SHEET 40 OF 276	REV
REVIEWED	GUBIN 00260	DATE 2024/11/22	Thu Jan 02 17:31:06 2025	

THIS DOCUMENT AND THE TECHNICAL DATA DISCLOSED ARE PROPRIETARY TO CNIT TECHNOLOGIES CO., LTD. AND SHALL NOT BE DUPLICATED USED RELEASED OR DISCLOSED WITHOUT EXPRESSING WRITTEN PERMISSION.

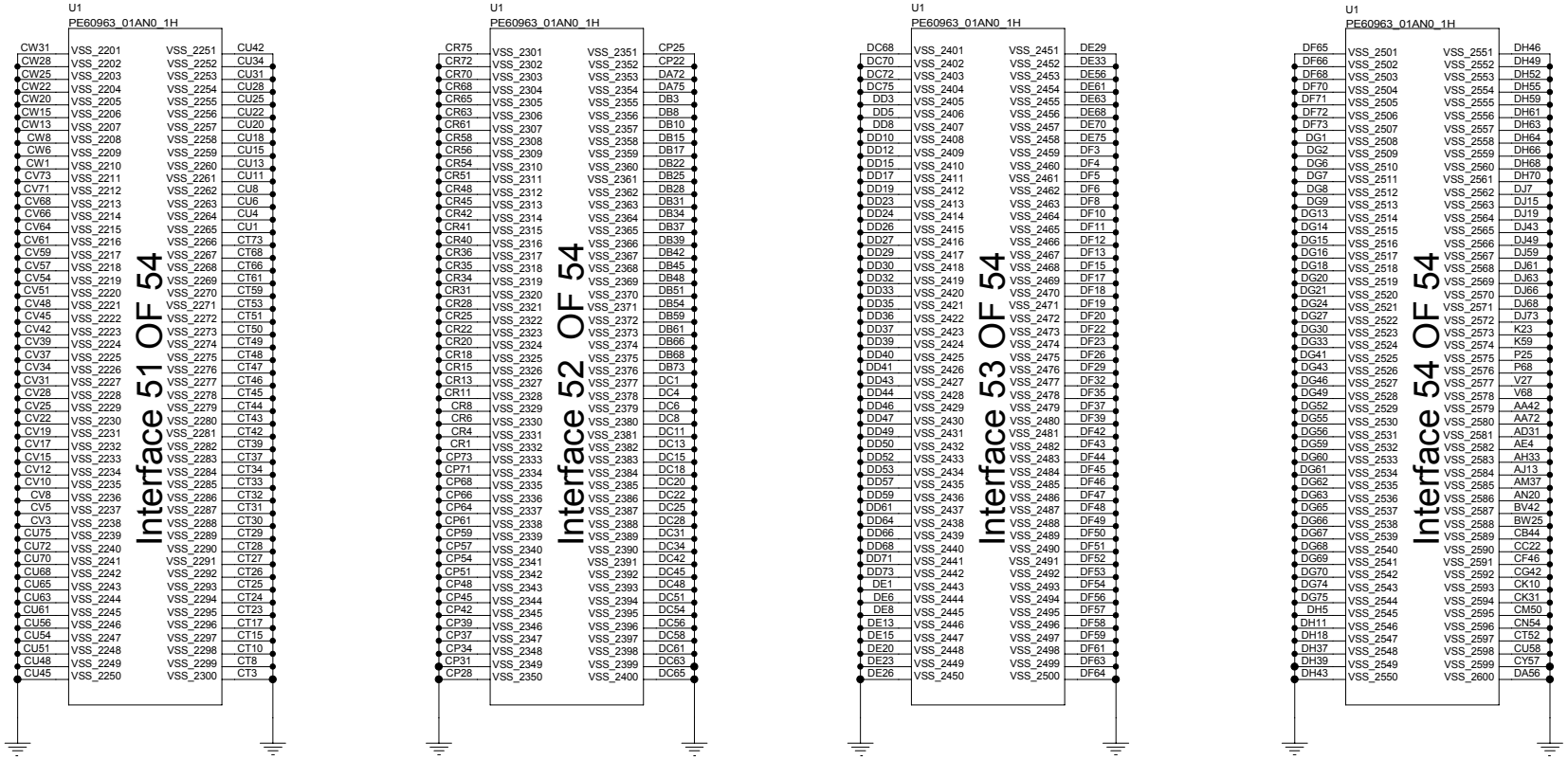

MODULE=---

FUNCTION=---

CNIT TECHNOLOGIES CO.,LTD.				
BOARD NAME BM-H14DSP_VERA			DRAWINGNO CNIT0302K1D0DL	
DESIGNED	ZHUHUI 00746	DATE 2024/10/22	SHEET 41 OF 276	REV
REVIEWED	GUBIN 00260	DATE 2024/11/22	Thu Jan 02 17:31:12 2025	

THIS DOCUMENT AND THE TECHNICAL DATA DISCLOSED ARE PROPRIETARY TO CNIT TECHNOLOGIES CO., LTD. AND SHALL NOT BE DUPLICATED USED RELEASED OR DISCLOSED WITHOUT EXPRESSING WRITTEN PERMISSION.

MODULE=---

FUNCTION=---

CNIT TECHNOLOGIES CO.,LTD.				
BOARD NAME BM-H14DSP_VERA			DRAWINGNO CNIT0302K1D0DL	
DESIGNED	ZHUHUI 00746	DATE 2024/10/22	SHEET 42 OF 276	REV
REVIEWED	GUBIN 00260	DATE 2024/11/22	Thu Jan 02 17:44:11 2025	

THIS DOCUMENT AND THE TECHNICAL DATA DISCLOSED ARE PROPRIETARY TO CNIT TECHNOLOGIES CO., LTD. AND SHALL NOT BE DUPLICATED USED RELEASED OR DISCLOSED WITHOUT EXPRESSING WRITTEN PERMISSION.

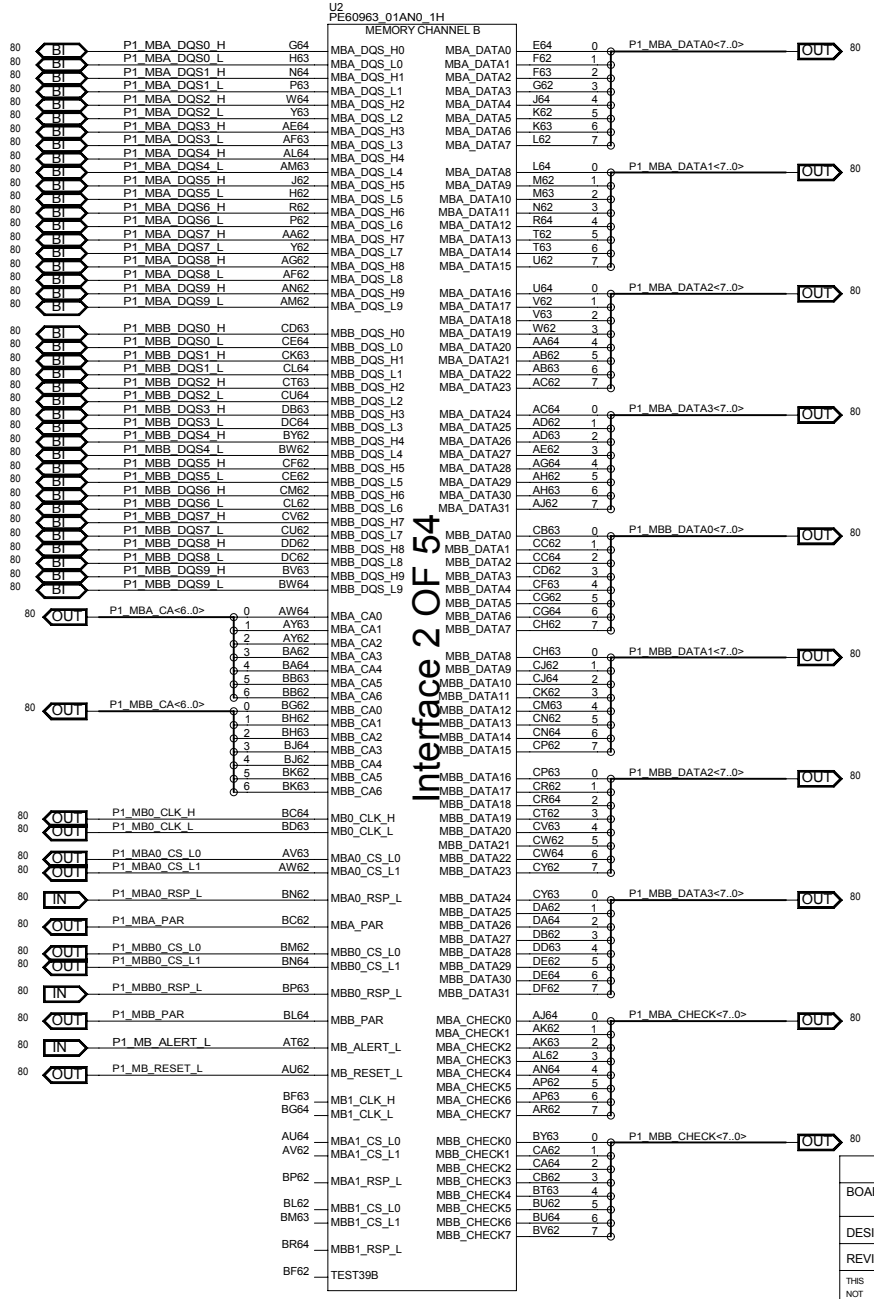

MODULE=---

FUNCTION=---

CNIT TECHNOLOGIES CO.,LTD.				
BOARD NAME BM-H14DSP_VERA			DRAWINGNO CNIT0302K1D0DL	
DESIGNED	ZHUHUI 00746	DATE 2024/10/22	SHEET 43 OF 276	REV
REVIEWED	GUBIN 00260	DATE 2024/11/22	Thu Jan 02 17:42:50 2025	

THIS DOCUMENT AND THE TECHNICAL DATA DISCLOSED ARE PROPRIETARY TO CNIT TECHNOLOGIES CO., LTD. AND SHALL NOT BE DUPLICATED USED RELEASED OR DISCLOSED WITHOUT EXPRESSING WRITTEN PERMISSION.

MODULE=---

FUNCTION=---

CNIT TECHNOLOGIES CO.,LTD.				
BOARD NAME BM-H14DSP_VERA			DRAWINGNO CNIT0302K1D0DL	
DESIGNED	ZHUHUI 00746	DATE 2024/10/22	SHEET 44 OF 276	REV
REVIEWED	GUBIN 00260	DATE 2024/11/22	Thu Jan 02 17:42:55 2025	

THIS DOCUMENT AND THE TECHNICAL DATA DISCLOSED ARE PROPRIETARY TO CNIT TECHNOLOGIES CO., LTD. AND SHALL NOT BE DUPLICATED USED RELEASED OR DISCLOSED WITHOUT EXPRESSING WRITTEN PERMISSION.

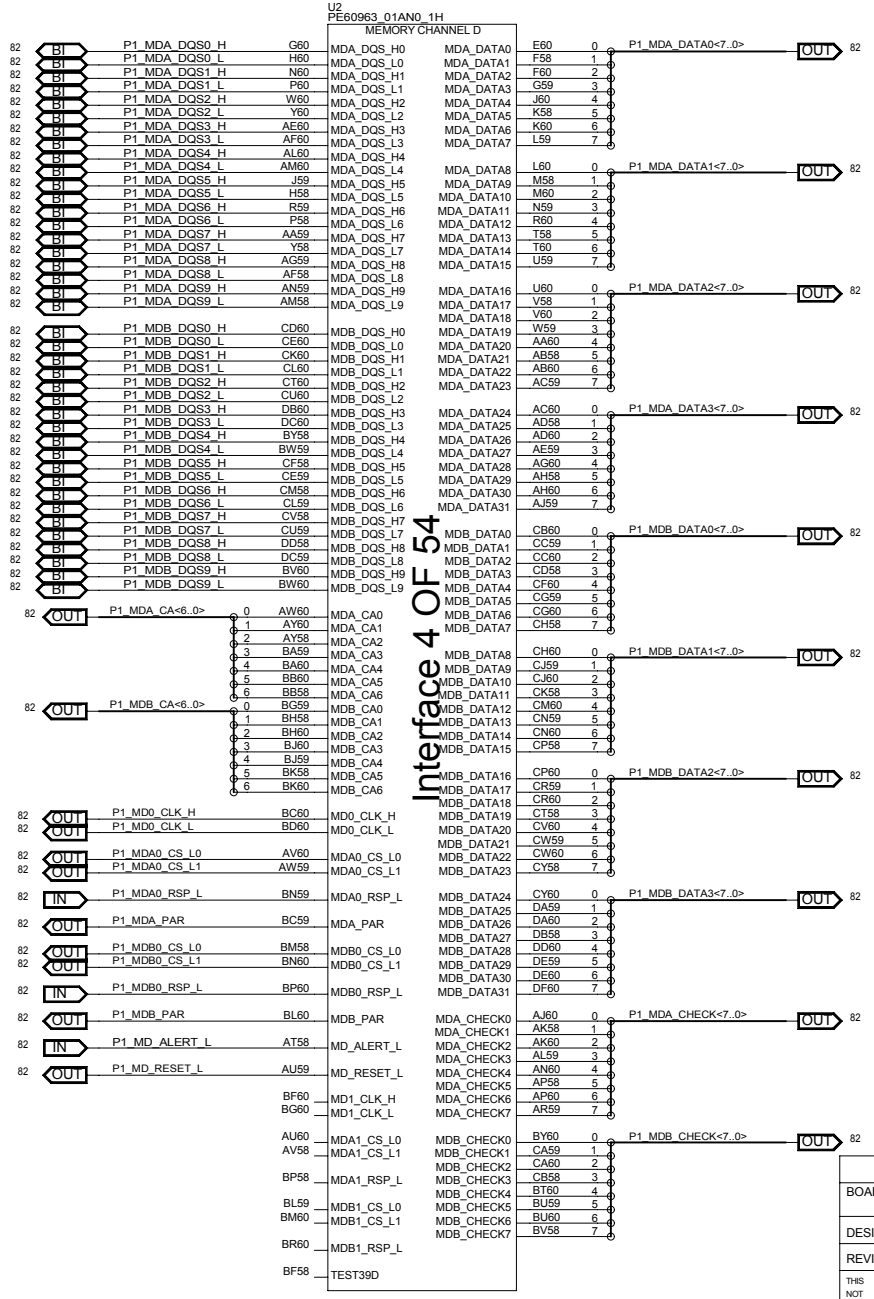

MODULE=---

FUNCTION=---

CNIT TECHNOLOGIES CO.,LTD.				
BOARD NAME BM-H14DSP_VERA			DRAWINGNO CNIT0302K1D0DL	
DESIGNED	ZHUHUI 00746	DATE 2024/10/22	SHEET 45 OF 276	REV
REVIEWED	GUBIN 00260	DATE 2024/11/22	Thu Jan 02 17:43:00 2025	

THIS DOCUMENT AND THE TECHNICAL DATA DISCLOSED ARE PROPRIETARY TO CNIT TECHNOLOGIES CO., LTD. AND SHALL NOT BE DUPLICATED USED RELEASED OR DISCLOSED WITHOUT EXPRESSING WRITTEN PERMISSION.

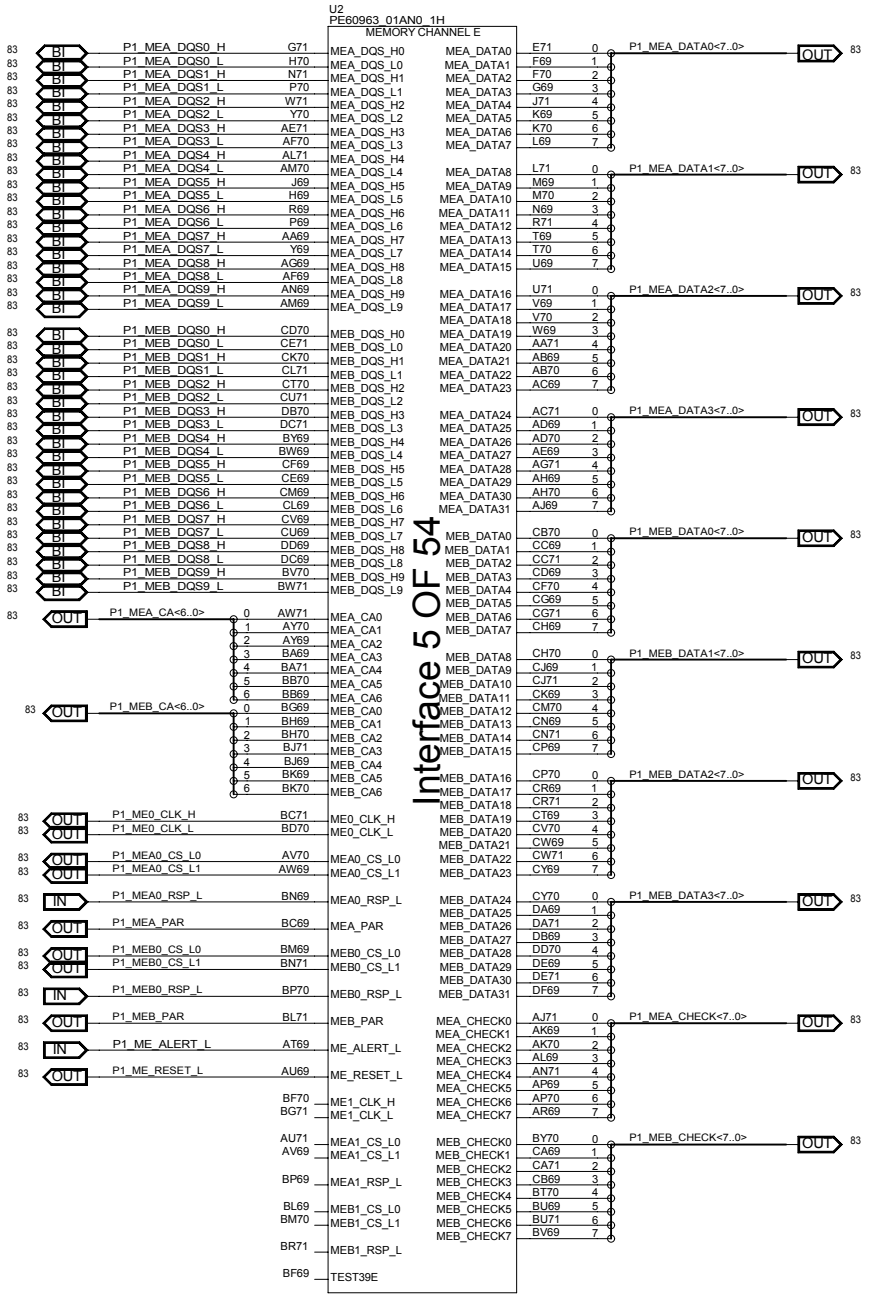

MODULE=---

FUNCTION=---

CNIT TECHNOLOGIES CO.,LTD.				
BOARD NAME BM-H14DSP_VERA			DRAWINGNO CNIT0302K1D0DL	
DESIGNED	ZHUHUI 00746	DATE 2024/10/22	SHEET 46 OF 276	REV
REVIEWED	GUBIN 00260	DATE 2024/11/22	Thu Jan 02 17:43:05 2025	

THIS DOCUMENT AND THE TECHNICAL DATA DISCLOSED ARE PROPRIETARY TO CNIT TECHNOLOGIES CO., LTD. AND SHALL NOT BE DUPLICATED USED RELEASED OR DISCLOSED WITHOUT EXPRESSING WRITTEN PERMISSION.

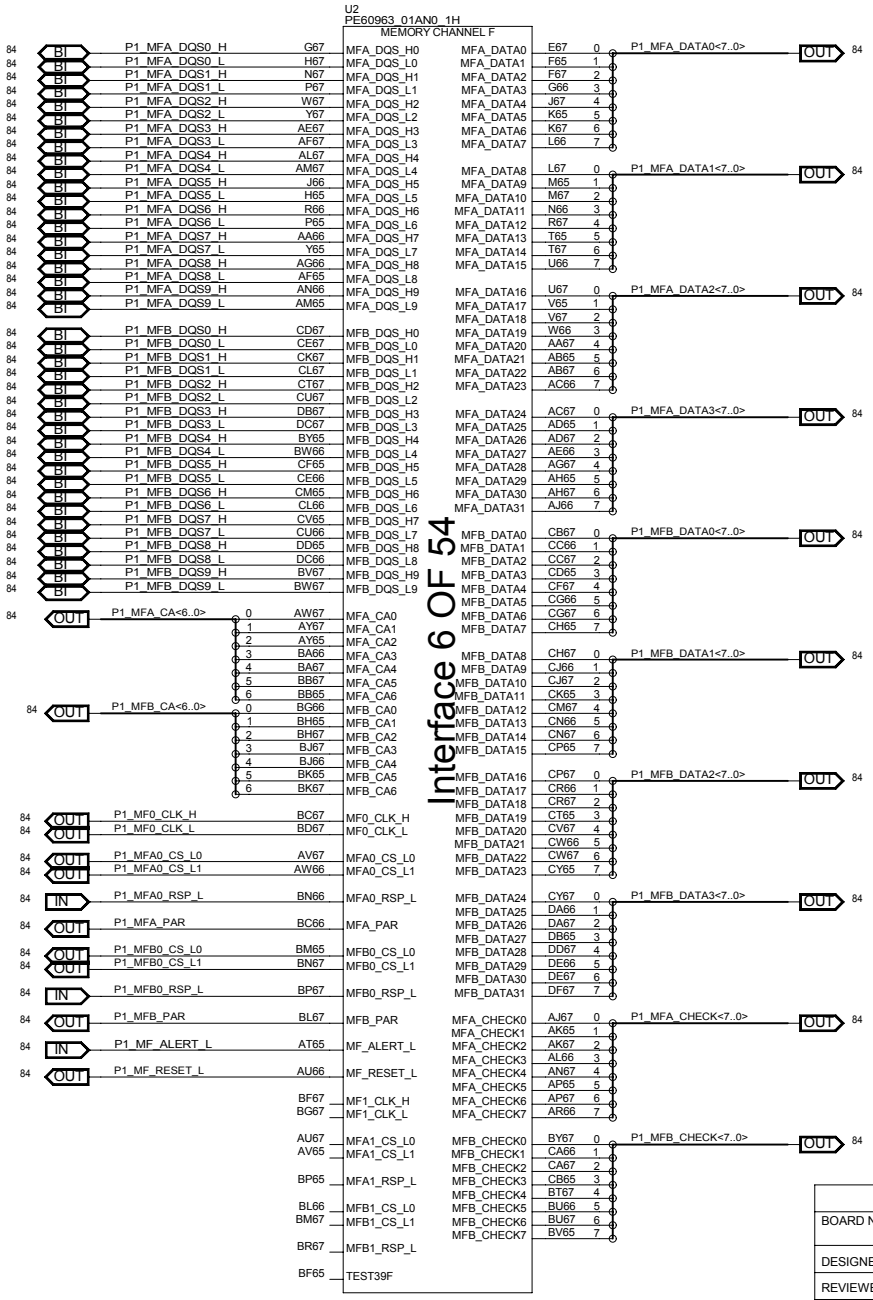

MODULE=---

FUNCTION=---

CNIT TECHNOLOGIES CO.,LTD.				
BOARD NAME BM-H14DSP_VERA			DRAWINGNO CNIT0302K1D0DL	
DESIGNED	ZHUHUI 00746	DATE 2024/10/22	SHEET 47 OF 276	REV
REVIEWED	GUBIN 00260	DATE 2024/11/22	Thu Jan 02 17:43:09 2025	

THIS DOCUMENT AND THE TECHNICAL DATA DISCLOSED ARE PROPRIETARY TO CNIT TECHNOLOGIES CO., LTD. AND SHALL NOT BE DUPLICATED USED RELEASED OR DISCLOSED WITHOUT EXPRESSING WRITTEN PERMISSION.

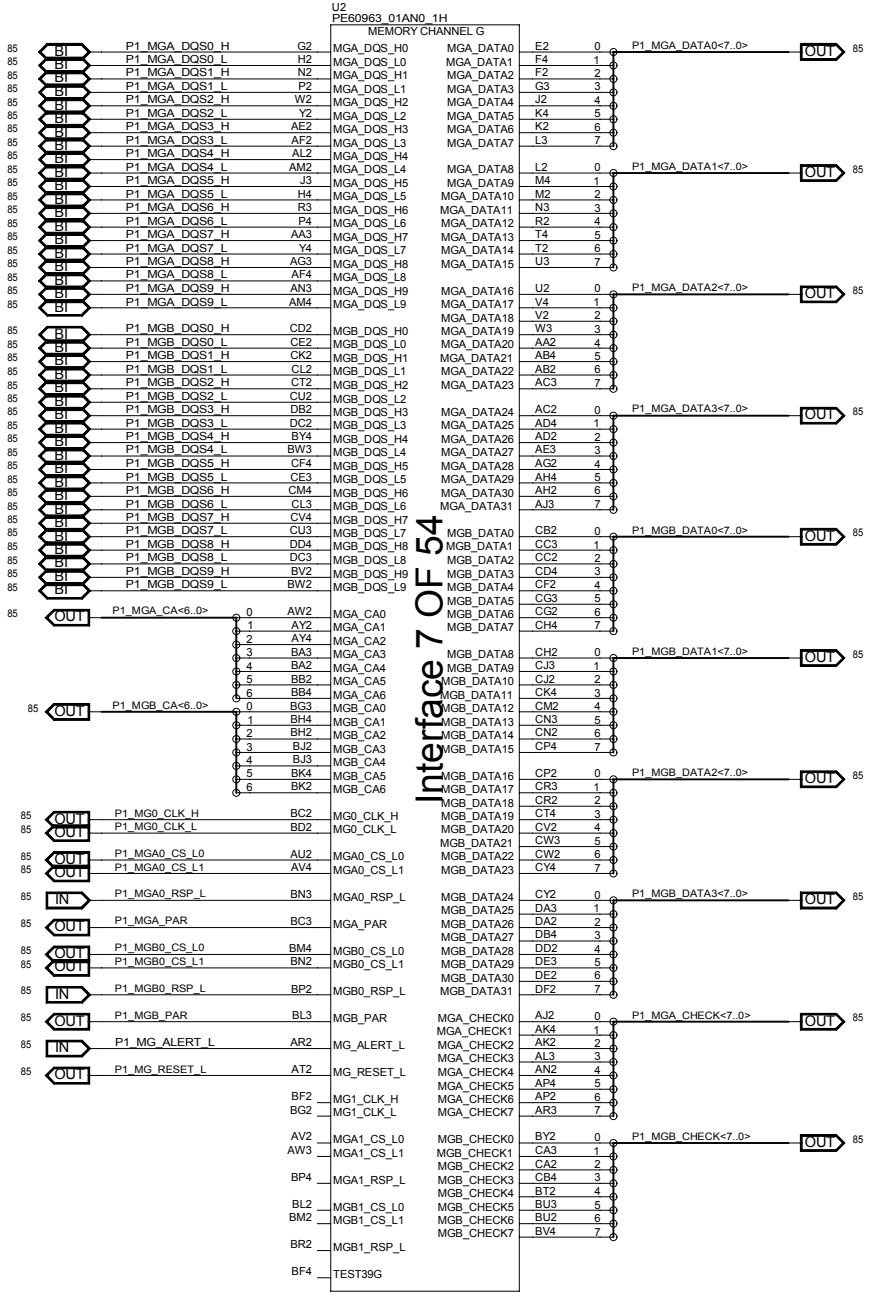

MODULE=---

FUNCTION=---

CNIT TECHNOLOGIES CO.,LTD.				
BOARD NAME BM-H14DSP_VERA			DRAWINGNO CNIT0302K1D0DL	
DESIGNED	ZHUHUI 00746	DATE 2024/10/22	SHEET 48 OF 276	REV
REVIEWED	GUBIN 00260	DATE 2024/11/22	Thu Jan 02 17:43:14 2025	

THIS DOCUMENT AND THE TECHNICAL DATA DISCLOSED ARE PROPRIETARY TO CNIT TECHNOLOGIES CO., LTD. AND SHALL NOT BE DUPLICATED USED RELEASED OR DISCLOSED WITHOUT EXPRESSING WRITTEN PERMISSION.

MODULE=---

FUNCTION=---

CNIT TECHNOLOGIES CO.,LTD.				
BOARD NAME BM-H14DSP_VERA			DRAWINGNO CNIT0302K1D0DL	
DESIGNED	ZHUHUI 00746	DATE 2024/10/22	SHEET 49 OF 276	REV
REVIEWED	GUBIN 00260	DATE 2024/11/22	Thu Jan 02 17:43:19 2025	

THIS DOCUMENT AND THE TECHNICAL DATA DISCLOSED ARE PROPRIETARY TO CNIT TECHNOLOGIES CO., LTD. AND SHALL NOT BE DUPLICATED USED RELEASED OR DISCLOSED WITHOUT EXPRESSING WRITTEN PERMISSION.

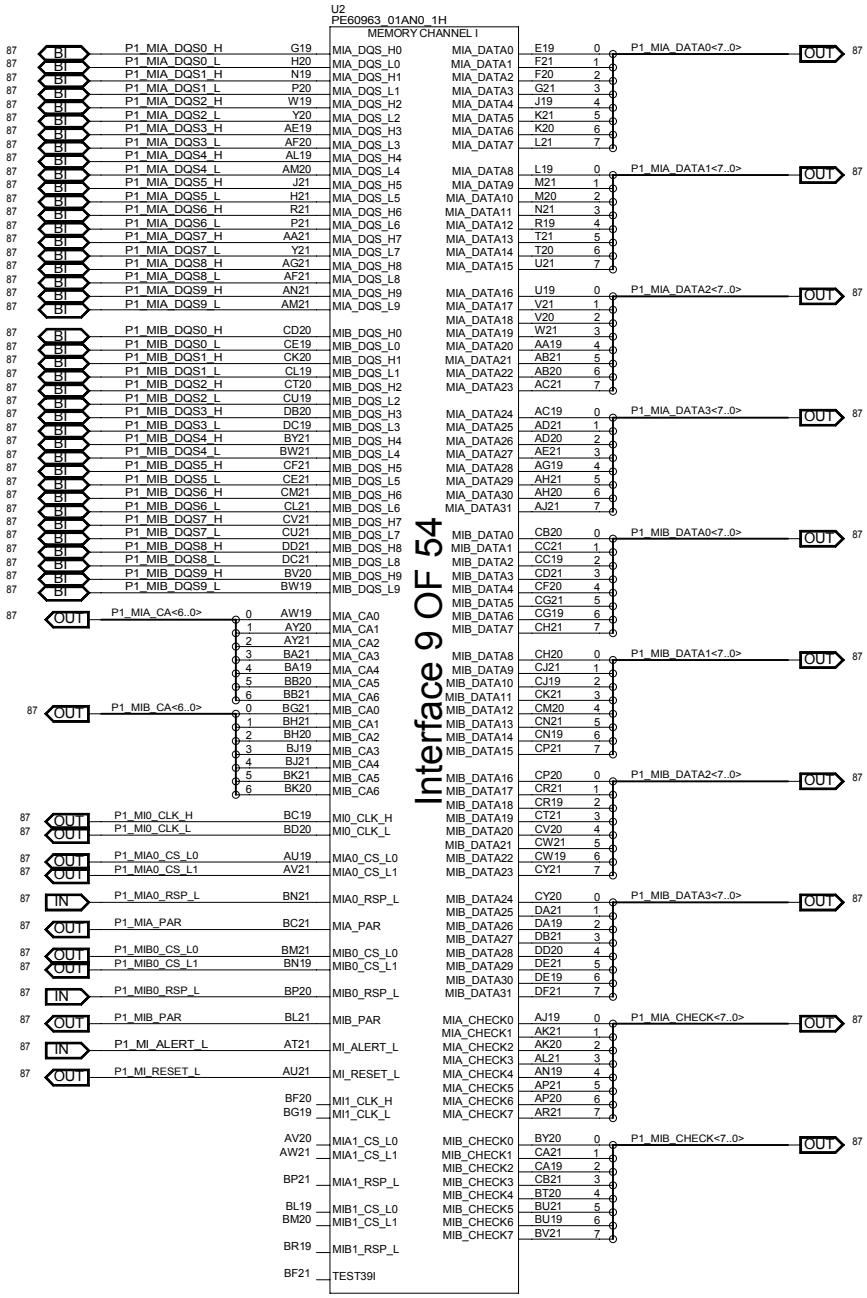

MODULE=---

FUNCTION=---

CNIT TECHNOLOGIES CO.,LTD.				
BOARD NAME BM-H14DSP_VERA			DRAWINGNO CNIT0302K1D0DL	
DESIGNED	ZHUHUI 00746	DATE 2024/10/22	SHEET 50 OF 276	REV
REVIEWED	GUBIN 00260	DATE 2024/11/22	Thu Jan 02 17:43:24 2025	

THIS DOCUMENT AND THE TECHNICAL DATA DISCLOSED ARE PROPRIETARY TO CNIT TECHNOLOGIES CO., LTD. AND SHALL NOT BE DUPLICATED USED RELEASED OR DISCLOSED WITHOUT EXPRESSING WRITTEN PERMISSION.

MODULE=---

FUNCTION=---

CNIT TECHNOLOGIES CO.,LTD.				
BOARD NAME BM-H14DSP_VERA			DRAWINGNO CNIT0302K1D0DL	
DESIGNED	ZHUHUI 00746	DATE 2024/10/22	SHEET 51 OF 276	REV
REVIEWED	GUBIN 00260	DATE 2024/11/22	Thu Jan 02 17:43:28 2025	

THIS DOCUMENT AND THE TECHNICAL DATA DISCLOSED ARE PROPRIETARY TO CNIT TECHNOLOGIES CO., LTD. AND SHALL NOT BE DUPLICATED USED RELEASED OR DISCLOSED WITHOUT EXPRESSING WRITTEN PERMISSION.

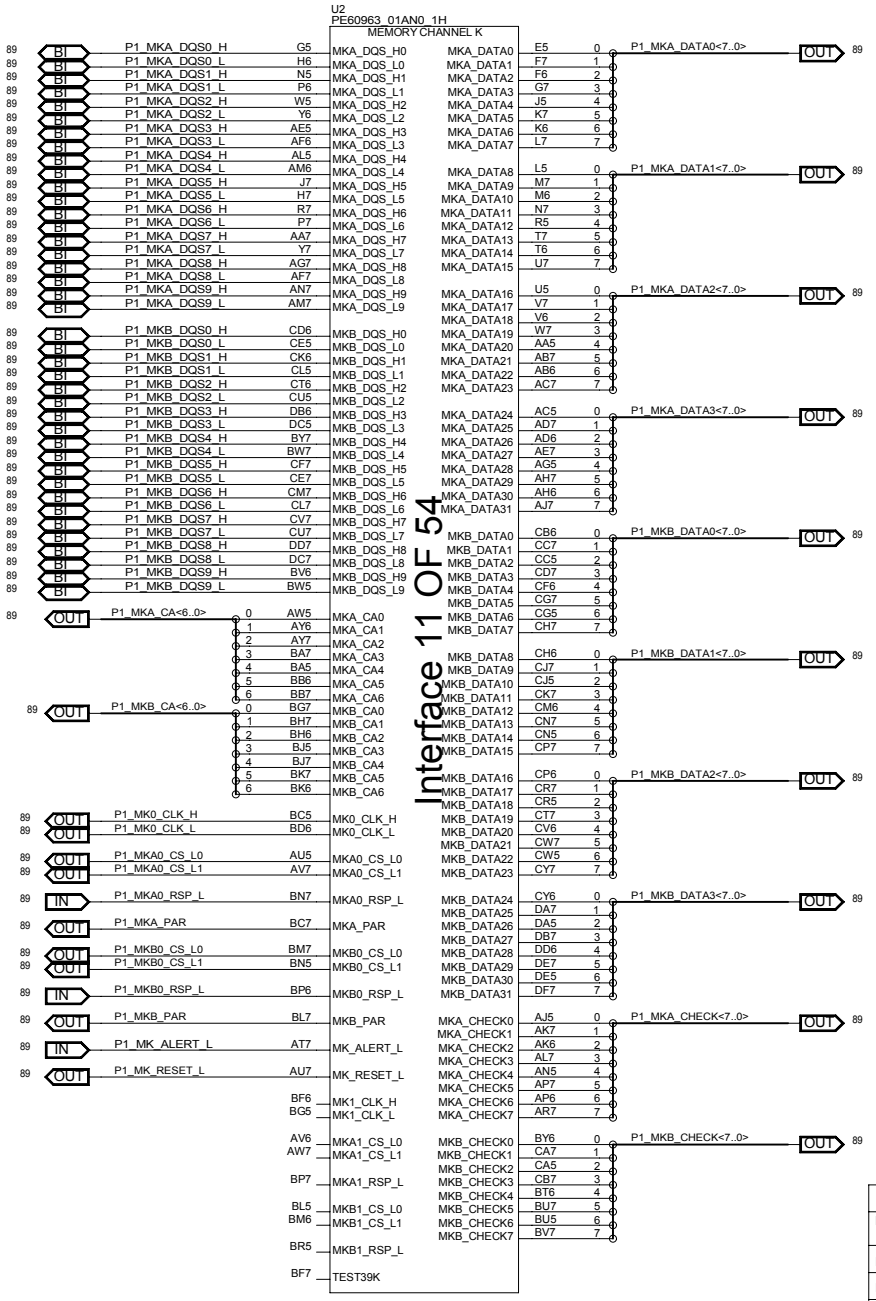

MODULE=---

FUNCTION=---

CNIT TECHNOLOGIES CO.,LTD.				
BOARD NAME BM-H14DSP_VERA			DRAWINGNO CNIT0302K1D0DL	
DESIGNED	ZHUHUI 00746	DATE 2024/10/22	SHEET 52 OF 276	REV
REVIEWED	GUBIN 00260	DATE 2024/11/22	Thu Jan 02 17:43:33 2025	

THIS DOCUMENT AND THE TECHNICAL DATA DISCLOSED ARE PROPRIETARY TO CNIT TECHNOLOGIES CO., LTD. AND SHALL NOT BE DUPLICATED USED RELEASED OR DISCLOSED WITHOUT EXPRESSING WRITTEN PERMISSION.

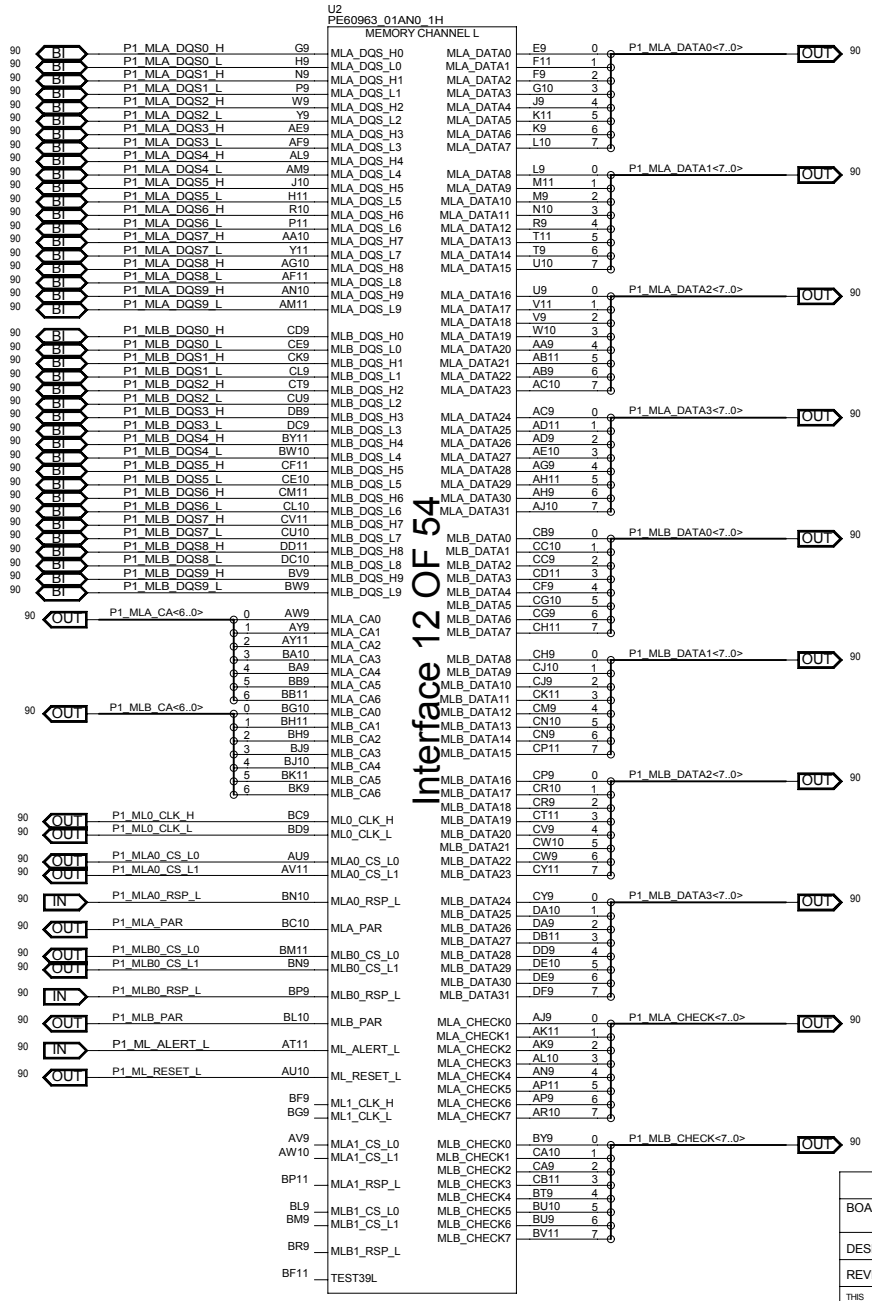

MODULE=---

FUNCTION=---

CNIT TECHNOLOGIES CO.,LTD.				
BOARD NAME BM-H14DSP_VERA			DRAWINGNO CNIT0302K1D0DL	
DESIGNED	ZHUHUI 00746	DATE 2024/10/22	SHEET 53 OF 276	REV
REVIEWED	GUBIN 00260	DATE 2024/11/22	Thu Jan 02 17:43:38 2025	

THIS DOCUMENT AND THE TECHNICAL DATA DISCLOSED ARE PROPRIETARY TO CNIT TECHNOLOGIES CO., LTD. AND SHALL NOT BE DUPLICATED USED RELEASED OR DISCLOSED WITHOUT EXPRESSING WRITTEN PERMISSION.

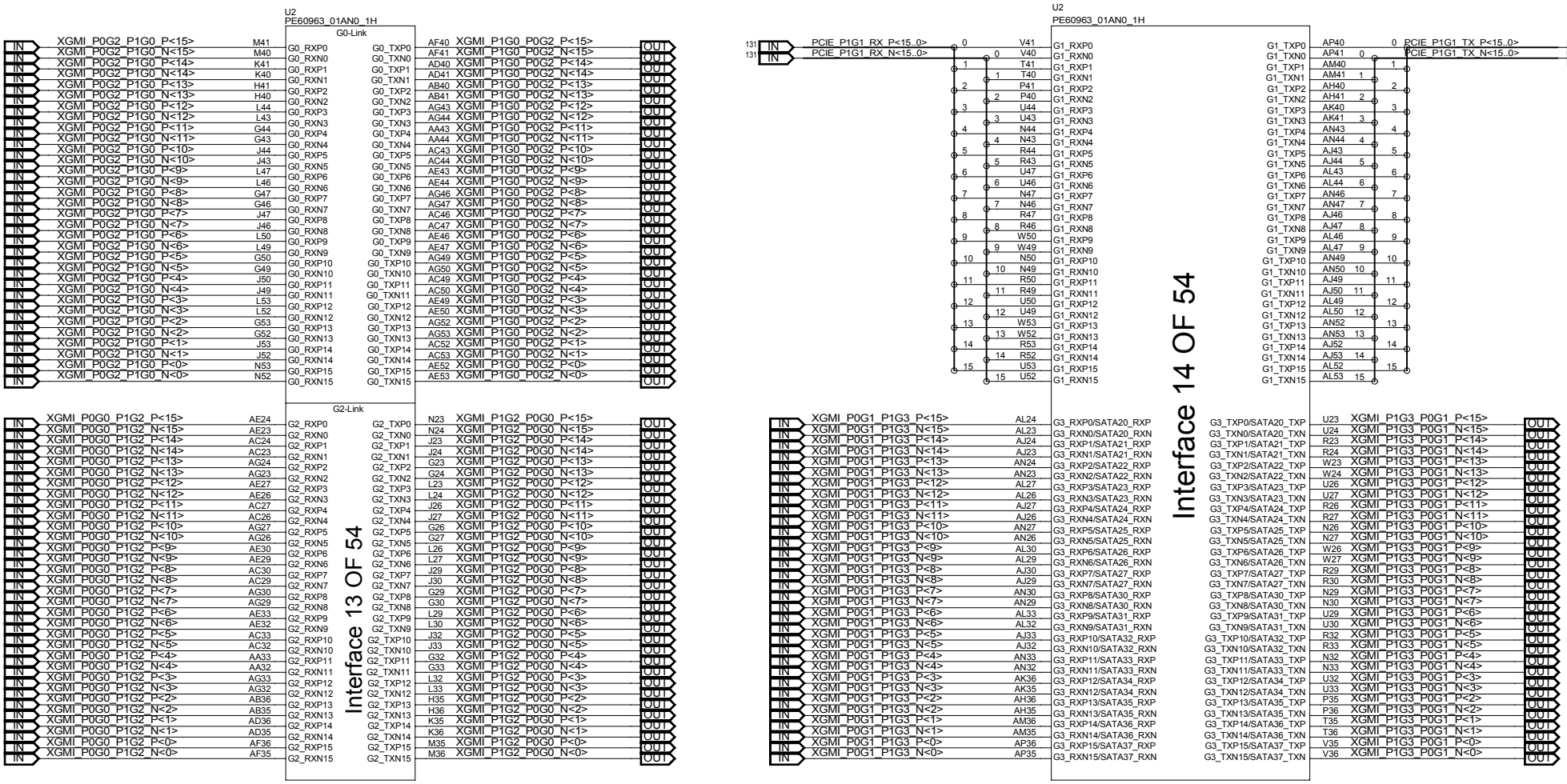

P0 GLink 2 <=> P1 GLink 0
P0 GLink 0 <=> P1 GLink 2

MODULE=---
FUNCTION=---

CNIT TECHNOLOGIES CO.,LTD.				
BOARD NAME BM-H14DSP_VERA			DRAWINGNO CNIT0302K1D0DL	
DESIGNED	ZHUHUI 00746	DATE 2024/10/22	SHEET 54 OF 276	REV
REVIEWED	GUBIN 00260	DATE 2024/11/22	Tue Dec 17 11:37:50 2024	

THIS DOCUMENT AND THE TECHNICAL DATA DISCLOSED ARE PROPRIETARY TO CNIT TECHNOLOGIES CO., LTD. AND SHALL NOT BE DUPLICATED USED RELEASED OR DISCLOSED WITHOUT EXPRESSING WRITTEN PERMISSION.

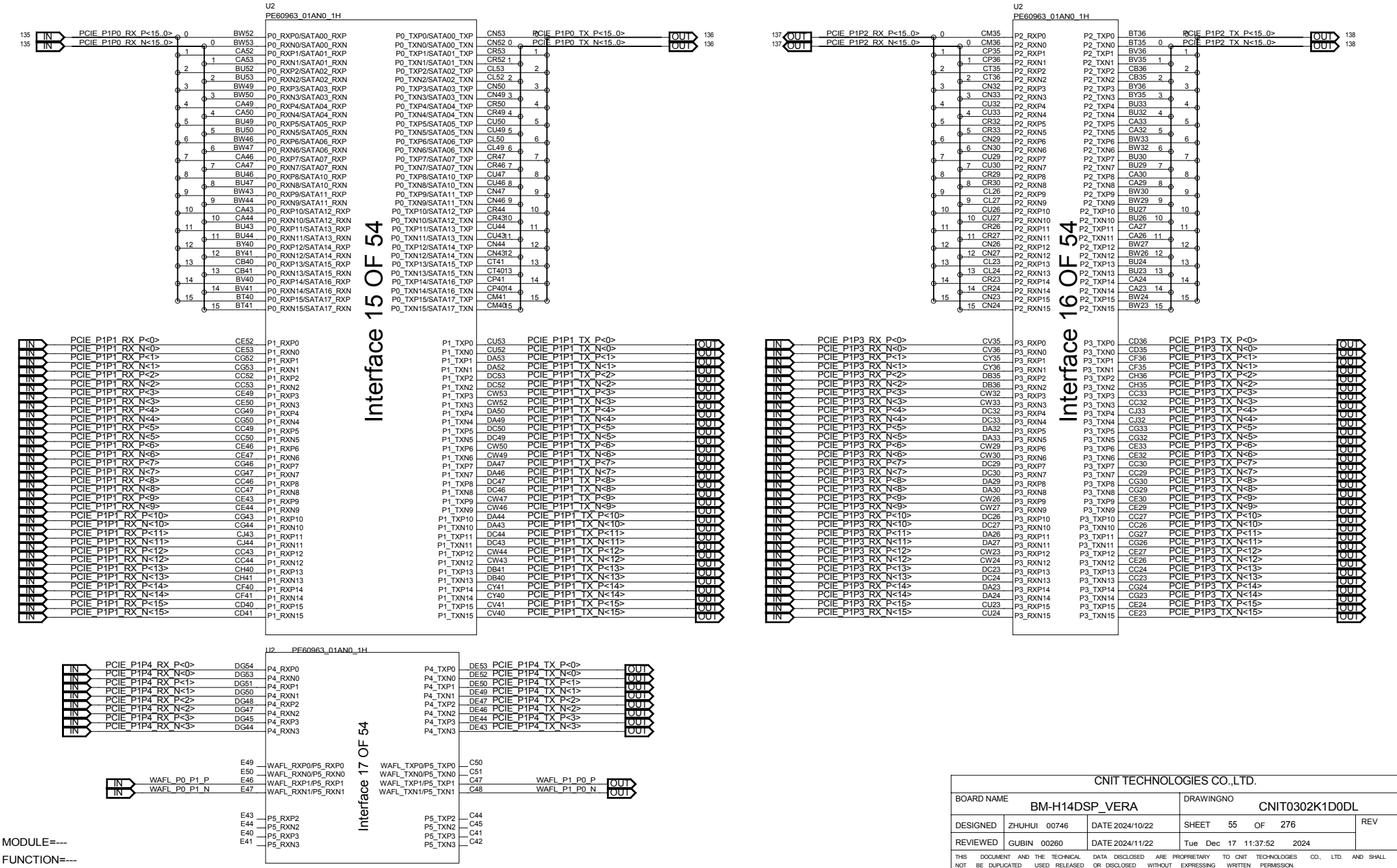
U2
PE60963_01AN0_1H
Interface 15 OF 54
Interface 16 OF 54
Interface 17 OF 54
PCIE_P1P0_RX_P<15..0>
PCIE_P1P0_RX_N<15..0>
PCIE_P1P0_TX_P<15..0>
PCIE_P1P0_TX_N<15..0>
PCIE_P1P2_RX_P<15..0>
PCIE_P1P2_RX_N<15..0>
PCIE_P1P2_TX_P<15..0>
PCIE_P1P2_TX_N<15..0>
PCIE_P1P1_RX_P<0>
PCIE_P1P1_RX_N<0>
PCIE_P1P1_RX_P<1>
PCIE_P1P1_RX_N<1>
PCIE_P1P1_RX_P<2>
PCIE_P1P1_RX_N<2>
PCIE_P1P1_RX_P<3>
PCIE_P1P1_RX_N<3>
PCIE_P1P1_RX_P<4>
PCIE_P1P1_RX_N<4>
PCIE_P1P1_RX_P<5>
PCIE_P1P1_RX_N<5>
PCIE_P1P1_RX_P<6>
PCIE_P1P1_RX_N<6>
PCIE_P1P1_RX_P<7>
PCIE_P1P1_RX_N<7>
PCIE_P1P1_RX_P<8>
PCIE_P1P1_RX_N<8>
PCIE_P1P1_RX_P<9>
PCIE_P1P1_RX_N<9>
PCIE_P1P1_RX_P<10>
PCIE_P1P1_RX_N<10>
PCIE_P1P1_RX_P<11>
PCIE_P1P1_RX_N<11>
PCIE_P1P1_RX_P<12>
PCIE_P1P1_RX_N<12>
PCIE_P1P1_RX_P<13>
PCIE_P1P1_RX_N<13>
PCIE_P1P1_RX_P<14>
PCIE_P1P1_RX_N<14>
PCIE_P1P1_RX_P<15>
PCIE_P1P1_RX_N<15>
PCIE_P1P1_TX_P<0>
PCIE_P1P1_TX_N<0>
PCIE_P1P1_TX_P<1>
PCIE_P1P1_TX_N<1>
PCIE_P1P1_TX_P<2>
PCIE_P1P1_TX_N<2>
PCIE_P1P1_TX_P<3>
PCIE_P1P1_TX_N<3>
PCIE_P1P1_TX_P<4>
PCIE_P1P1_TX_N<4>
PCIE_P1P1_TX_P<5>
PCIE_P1P1_TX_N<5>
PCIE_P1P1_TX_P<6>
PCIE_P1P1_TX_N<6>
PCIE_P1P1_TX_P<7>
PCIE_P1P1_TX_N<7>
PCIE_P1P1_TX_P<8>
PCIE_P1P1_TX_N<8>
PCIE_P1P1_TX_P<9>
PCIE_P1P1_TX_N<9>
PCIE_P1P1_TX_P<10>
PCIE_P1P1_TX_N<10>
PCIE_P1P1_TX_P<11>
PCIE_P1P1_TX_N<11>
PCIE_P1P1_TX_P<12>
PCIE_P1P1_TX_N<12>
PCIE_P1P1_TX_P<13>
PCIE_P1P1_TX_N<13>
PCIE_P1P1_TX_P<14>
PCIE_P1P1_TX_N<14>
PCIE_P1P1_TX_P<15>
PCIE_P1P1_TX_N<15>
PCIE_P1P3_RX_P<0>
PCIE_P1P3_RX_N<0>
PCIE_P1P3_RX_P<1>
PCIE_P1P3_RX_N<1>
PCIE_P1P3_RX_P<2>
PCIE_P1P3_RX_N<2>
PCIE_P1P3_RX_P<3>
PCIE_P1P3_RX_N<3>
PCIE_P1P3_RX_P<4>
PCIE_P1P3_RX_N<4>
PCIE_P1P3_RX_P<5>
PCIE_P1P3_RX_N<5>
PCIE_P1P3_RX_P<6>
PCIE_P1P3_RX_N<6>
PCIE_P1P3_RX_P<7>
PCIE_P1P3_RX_N<7>
PCIE_P1P3_RX_P<8>
PCIE_P1P3_RX_N<8>
PCIE_P1P3_RX_P<9>
PCIE_P1P3_RX_N<9>
PCIE_P1P3_RX_P<10>
PCIE_P1P3_RX_N<10>
PCIE_P1P3_RX_P<11>
PCIE_P1P3_RX_N<11>
PCIE_P1P3_RX_P<12>
PCIE_P1P3_RX_N<12>
PCIE_P1P3_RX_P<13>
PCIE_P1P3_RX_N<13>
PCIE_P1P3_RX_P<14>
PCIE_P1P3_RX_N<14>
PCIE_P1P3_RX_P<15>
PCIE_P1P3_RX_N<15>
PCIE_P1P3_TX_P<0>
PCIE_P1P3_TX_N<0>
PCIE_P1P3_TX_P<1>
PCIE_P1P3_TX_N<1>
PCIE_P1P3_TX_P<2>
PCIE_P1P3_TX_N<2>
PCIE_P1P3_TX_P<3>
PCIE_P1P3_TX_N<3>
PCIE_P1P3_TX_P<4>
PCIE_P1P3_TX_N<4>
PCIE_P1P3_TX_P<5>
PCIE_P1P3_TX_N<5>
PCIE_P1P3_TX_P<6>
PCIE_P1P3_TX_N<6>
PCIE_P1P3_TX_P<7>
PCIE_P1P3_TX_N<7>
PCIE_P1P3_TX_P<8>
PCIE_P1P3_TX_N<8>
PCIE_P1P3_TX_P<9>
PCIE_P1P3_TX_N<9>
PCIE_P1P3_TX_P<10>
PCIE_P1P3_TX_N<10>
PCIE_P1P3_TX_P<11>
PCIE_P1P3_TX_N<11>
PCIE_P1P3_TX_P<12>
PCIE_P1P3_TX_N<12>
PCIE_P1P3_TX_P<13>
PCIE_P1P3_TX_N<13>
PCIE_P1P3_TX_P<14>
PCIE_P1P3_TX_N<14>
PCIE_P1P3_TX_P<15>
PCIE_P1P3_TX_N<15>
PCIE_P1P4_RX_P<0>
PCIE_P1P4_RX_N<0>
PCIE_P1P4_RX_P<1>
PCIE_P1P4_RX_N<1>
PCIE_P1P4_RX_P<2>
PCIE_P1P4_RX_N<2>
PCIE_P1P4_RX_P<3>
PCIE_P1P4_RX_N<3>
PCIE_P1P4_TX_P<0>
PCIE_P1P4_TX_N<0>
PCIE_P1P4_TX_P<1>
PCIE_P1P4_TX_N<1>
PCIE_P1P4_TX_P<2>
PCIE_P1P4_TX_N<2>
PCIE_P1P4_TX_P<3>
PCIE_P1P4_TX_N<3>
WAFL_P0_P1_P
WAFL_P0_P1_N
WAFL_P1_P0_P
WAFL_P1_P0_N
MODULE=---
FUNCTION=---
CNIT TECHNOLOGIES CO.,LTD.
BOARD NAME
BM-H14DSP_VERA
DRAWINGNO
CNIT0302K1D0DL
DESIGNED
ZHUHUI 00746
DATE 2024/10/22
SHEET 55 OF 276
REV
REVIEWED
GUBIN 00260
DATE 2024/11/22
Tue Dec 17 11:37:52 2024
THIS DOCUMENT AND THE TECHNICAL DATA DISCLOSED ARE PROPRIETARY TO CNIT TECHNOLOGIES CO., LTD. AND SHALL NOT BE DUPLICATED USED RELEASED OR DISCLOSED WITHOUT EXPRESSING WRITTEN PERMISSION.

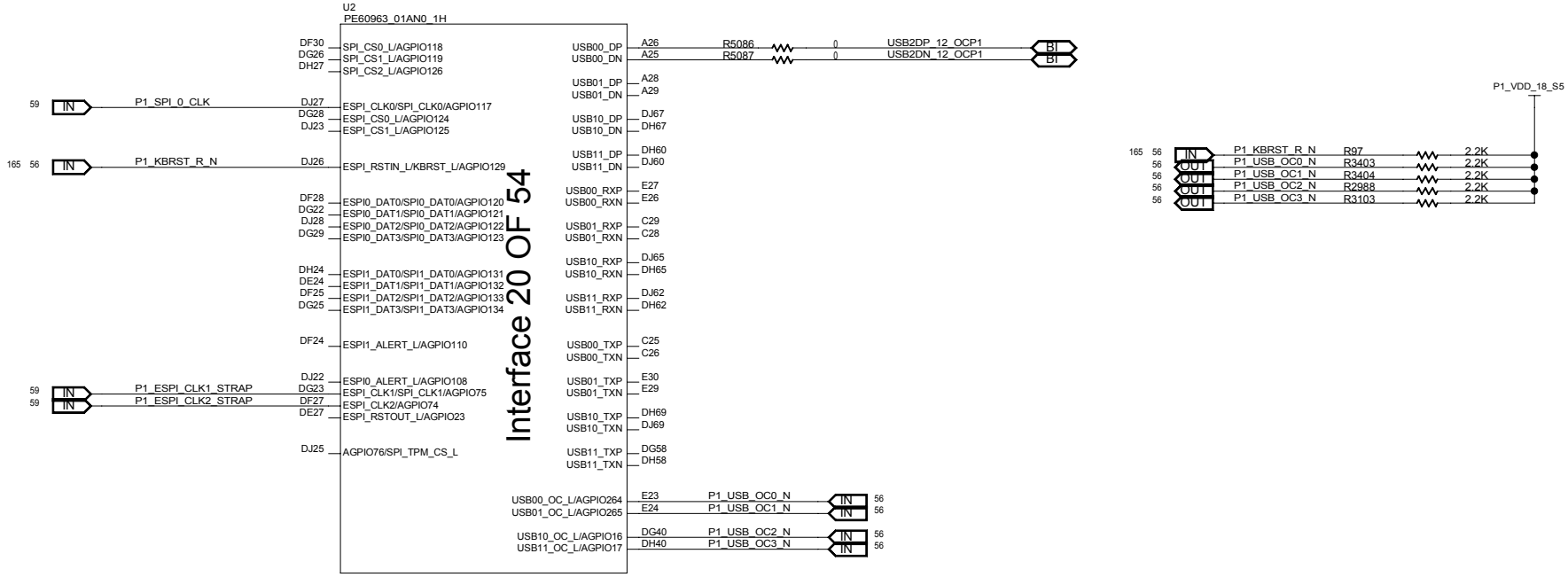

MODULE=---

FUNCTION=---

CNIT TECHNOLOGIES CO.,LTD.				
BOARD NAME BM-H14DSP_VERA			DRAWINGNO CNIT0302K1D0DL	
DESIGNED	ZHUHUI 00746	DATE 2024/10/22	SHEET 56 OF 276	REV
REVIEWED	GUBIN 00260	DATE 2024/11/22	Thu Jan 02 17:43:43 2025	

THIS DOCUMENT AND THE TECHNICAL DATA DISCLOSED ARE PROPRIETARY TO CNIT TECHNOLOGIES CO., LTD. AND SHALL NOT BE DUPLICATED USED RELEASED OR DISCLOSED WITHOUT EXPRESSING WRITTEN PERMISSION.

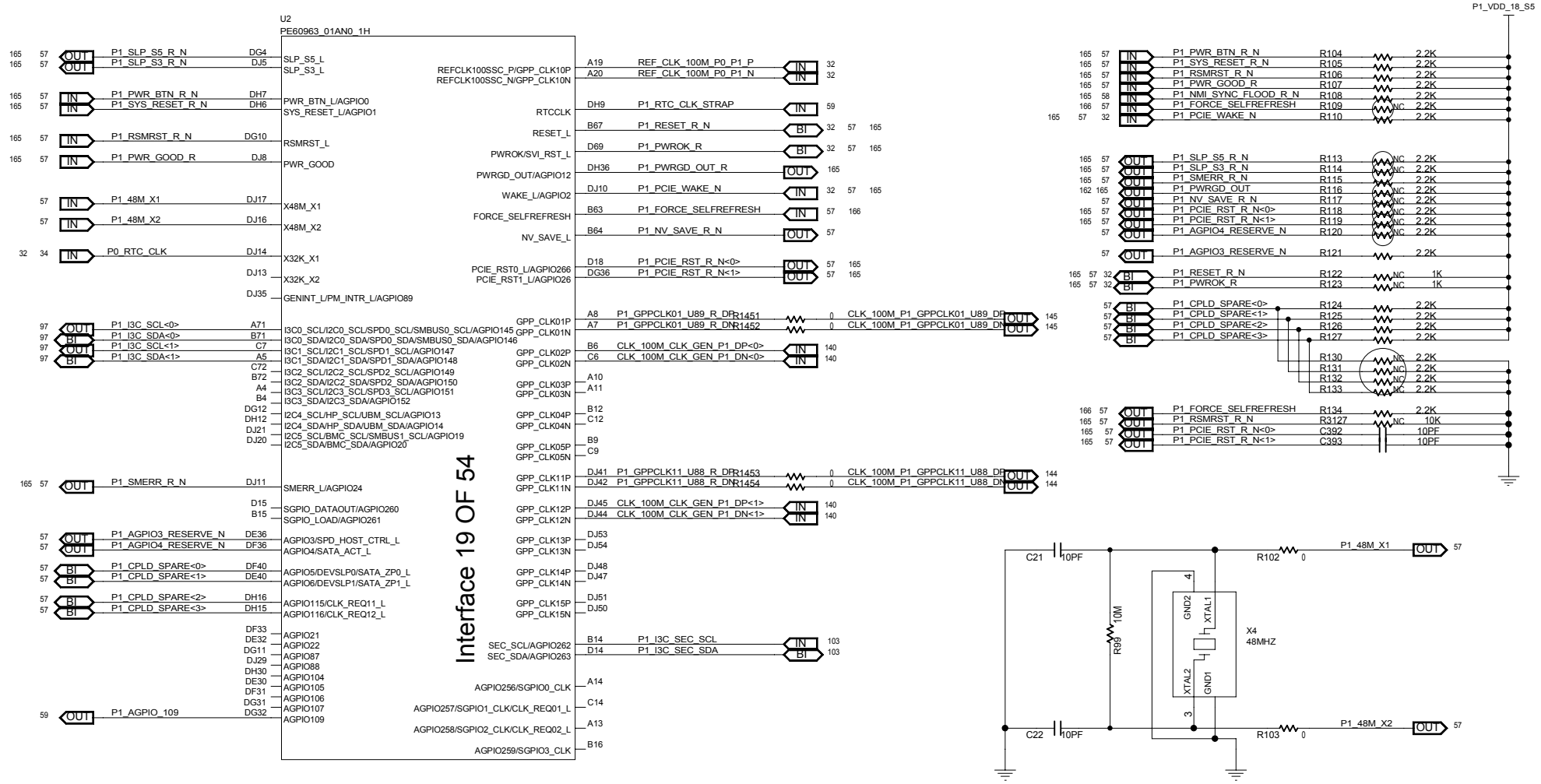

CNIT TECHNOLOGIES CO.,LTD.				
BOARD NAME BM-H14DSP_VERA			DRAWINGNO CNIT0302K1D0DL	
DESIGNED	ZHUHUI 00746	DATE 2024/10/22	SHEET 57 OF 276	REV
REVIEWED	GUBIN 00260	DATE 2024/11/22	Fri Dec 27 11:42:35 2024	

THIS DOCUMENT AND THE TECHNICAL DATA DISCLOSED ARE PROPRIETARY TO CNIT TECHNOLOGIES CO., LTD. AND SHALL NOT BE DUPLICATED USED RELEASED OR DISCLOSED WITHOUT EXPRESSING WRITTEN PERMISSION.

MODULE=---

FUNCTION=---

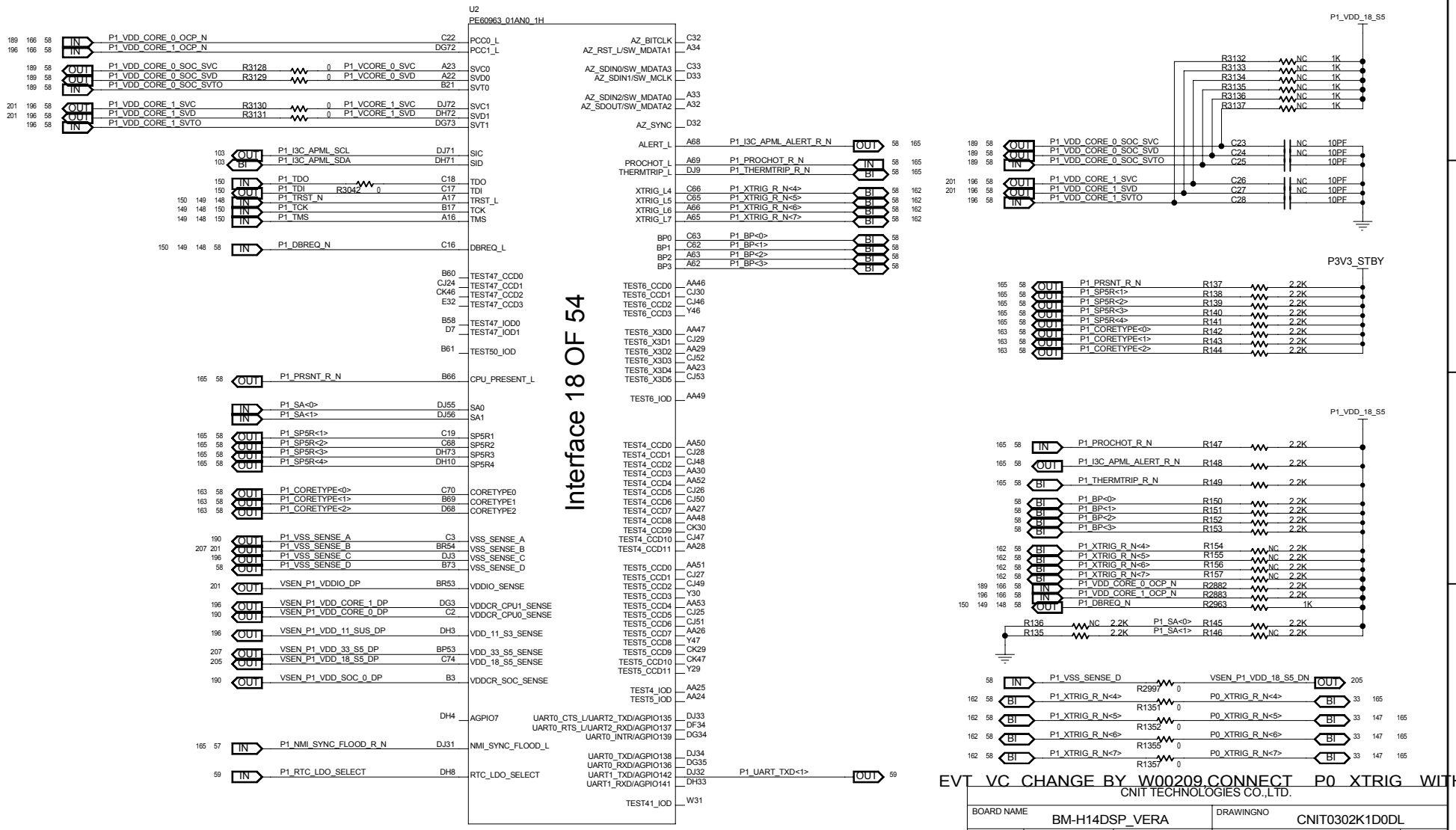

EVT VC CHANGE BY W00209,CONNECT P0 XTRIG WITH P1 XTRIG

MODULE=---

FUNCTION=---

CNIT TECHNOLOGIES CO.,LTD.

BOARD NAME	BM-H14DSP_VERA	DRAWINGNO	CNIT0302K1D0DL
DESIGNED	ZHUHUI 00746	DATE 2024/10/22	SHEET 58 OF 276
REVIEWED	GUBIN 00260	DATE 2024/11/22	Thu Jan 02 17:43:47 2025

REV

THIS DOCUMENT AND THE TECHNICAL DATA DISCLOSED ARE PROPRIETARY TO CNIT TECHNOLOGIES CO., LTD. AND SHALL NOT BE DUPLICATED USED RELEASED OR DISCLOSED WITHOUT EXPRESSING WRITTEN PERMISSION.

PIN NAME	INTERNAL PU/PD	CPU0(DEFAULT)	CPU1(DEFAULT)	DESCRIPTION
ESPI_CLK0/SPI_CLK0/AGPIO117	PD	0	0	CLKGEN SELECTION 0: EXTERNAL CLKGEN MODE 1: INTERNAL CLKGEN MODE
UART1_TXD/AGPIO142 AGPIO109	PU PU	0 1	0 0	ROMTYPE[1:0] 01: SPI ROM 00: RSVD 1X: ESPI
ESPI_CLK1/SPI_CLK1/AGPIO75	PD	0	0	ALTERNATE IMAGE 0: TOP HALF 64MB ROM 1: BOTTOM HALF 64MB ROM
RTCCLK	PD	0	0	BYPASS RTC 0: NORMAL MODE, 32KHZ XTAL AS SOURCE 1: RTCCLK IS INPUT & USED AS BYPASS CLK
ESPI_CLK2/AGPIO74	PD	0	0	RSVD

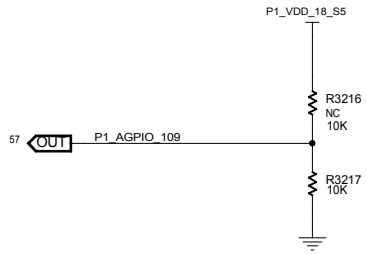

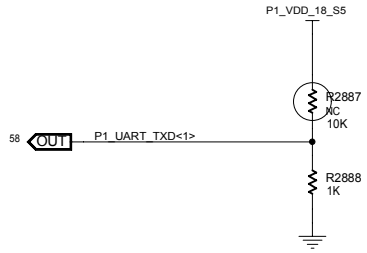

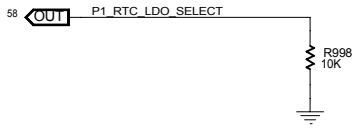

HIGH = VDDBT_RTC_G POWERED FROM 3.0V SOURCE
LOW = VDDBT_RTC_G POWERED FROM 1.8 OR 1.5V SOURCE (DEFAULT)

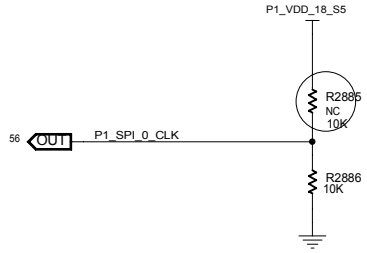

HIGH = INT CLK GEN
LOW = EXT CLK GEN (DEFAULT)

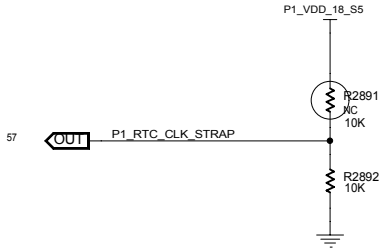

HIGH = RSVD
LOW = USE 32KHZ XTAL (DEFAULT)

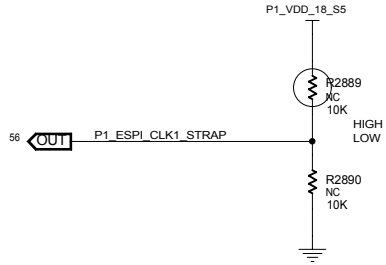

HIGH = BOOT FROM ALTERNATE FW IMAGE
LOW = DEFAULT

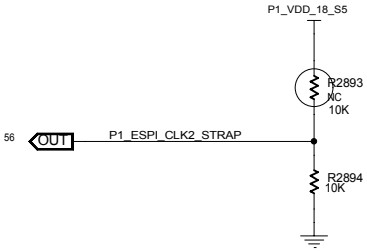

HIGH = RSVD
LOW = DEFAULT

MODULE=---
FUNCTION=---

CNIT TECHNOLOGIES CO.,LTD.				
BOARD NAME BM-H14DSP_VERA			DRAWINGNO CNIT0302K1D0DL	
DESIGNED	ZHUHUI 00746	DATE 2024/10/22	SHEET 59 OF 276	REV
REVIEWED	GUBIN 00260	DATE 2024/11/22	Fri Dec 27 11:42:45 2024	

THIS DOCUMENT AND THE TECHNICAL DATA DISCLOSED ARE PROPRIETARY TO CNIT TECHNOLOGIES CO., LTD. AND SHALL NOT BE DUPLICATED USED RELEASED OR DISCLOSED WITHOUT EXPRESSING WRITTEN PERMISSION.

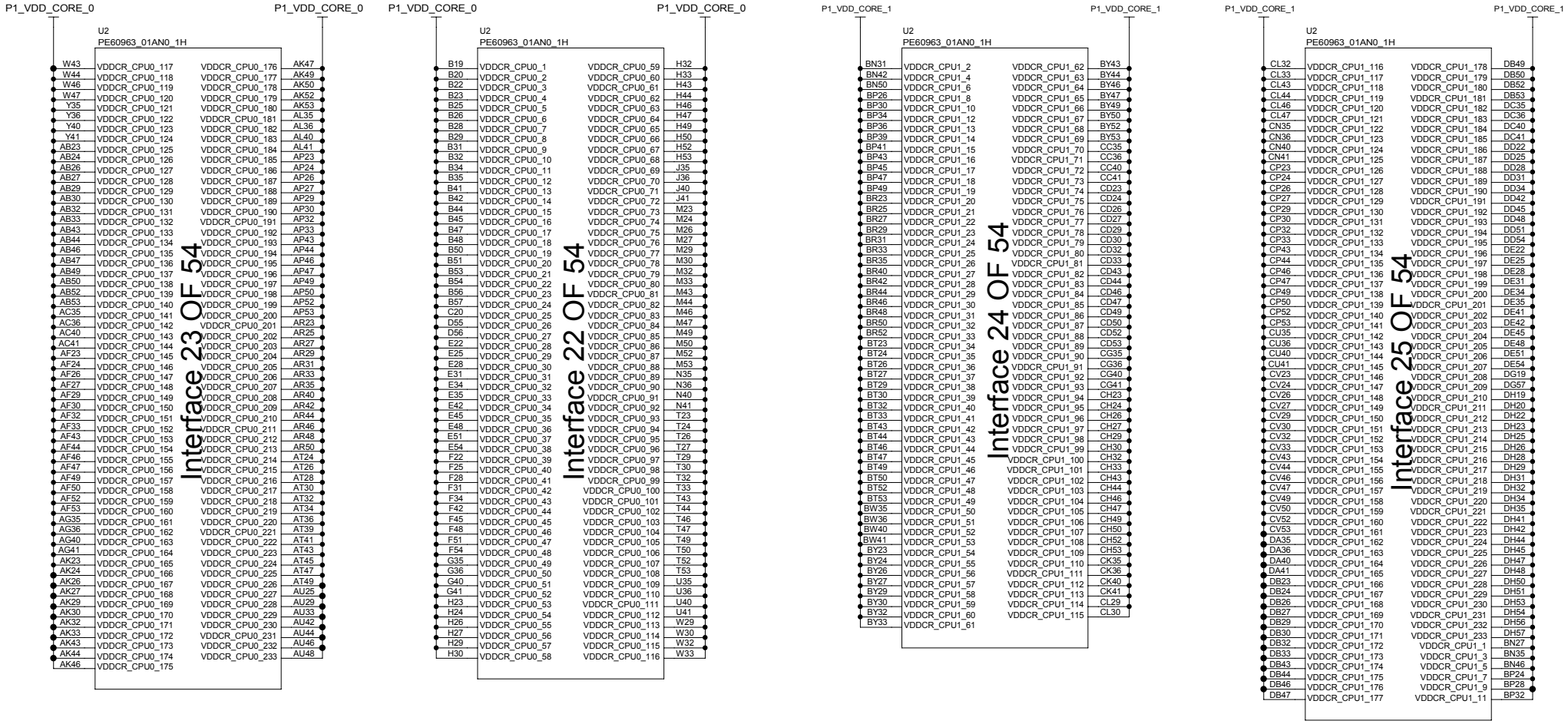

MODULE=---

FUNCTION=---

CNIT TECHNOLOGIES CO.,LTD.				
BOARD NAME BM-H14DSP_VERA			DRAWINGNO CNIT0302K1D0DL	
DESIGNED	ZHUHUI 00746	DATE 2024/10/22	SHEET 60 OF 276	REV
REVIEWED	GUBIN 00260	DATE 2024/11/22	Thu Jan 02 17:43:52 2025	

THIS DOCUMENT AND THE TECHNICAL DATA DISCLOSED ARE PROPRIETARY TO CNIT TECHNOLOGIES CO., LTD. AND SHALL NOT BE DUPLICATED USED RELEASED OR DISCLOSED WITHOUT EXPRESSING WRITTEN PERMISSION.

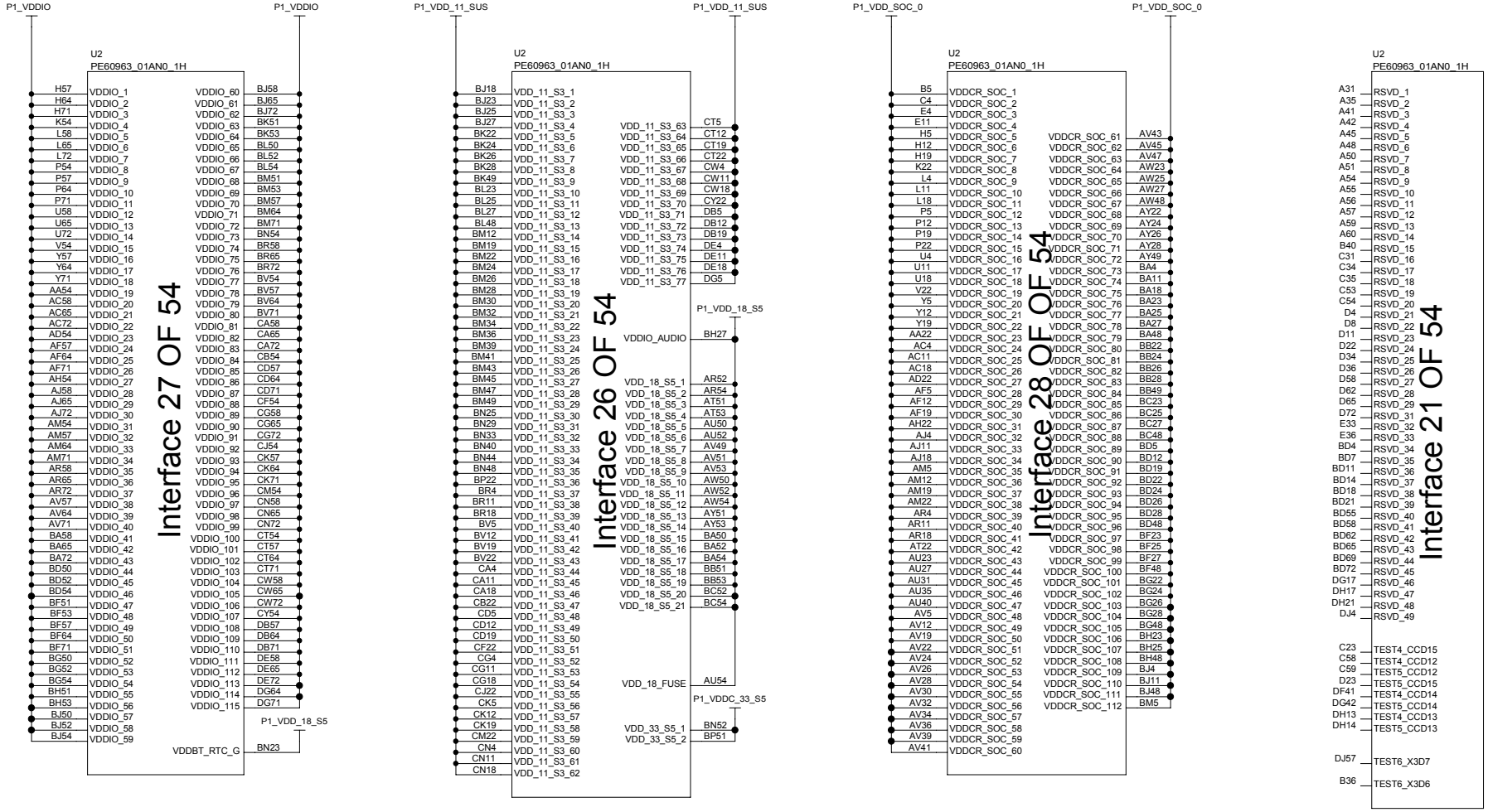

MODULE=---

FUNCTION=---

CNIT TECHNOLOGIES CO.,LTD.				
BOARD NAME BM-H14DSP_VERA			DRAWINGNO CNIT0302K1D0DL	
DESIGNED	ZHUHUI 00746	DATE 2024/10/22	SHEET 61 OF 276	REV
REVIEWED	GUBIN 00260	DATE 2024/11/22	Thu Jan 02 17:43:56 2025	

THIS DOCUMENT AND THE TECHNICAL DATA DISCLOSED ARE PROPRIETARY TO CNIT TECHNOLOGIES CO., LTD. AND SHALL NOT BE DUPLICATED USED RELEASED OR DISCLOSED WITHOUT EXPRESSING WRITTEN PERMISSION.

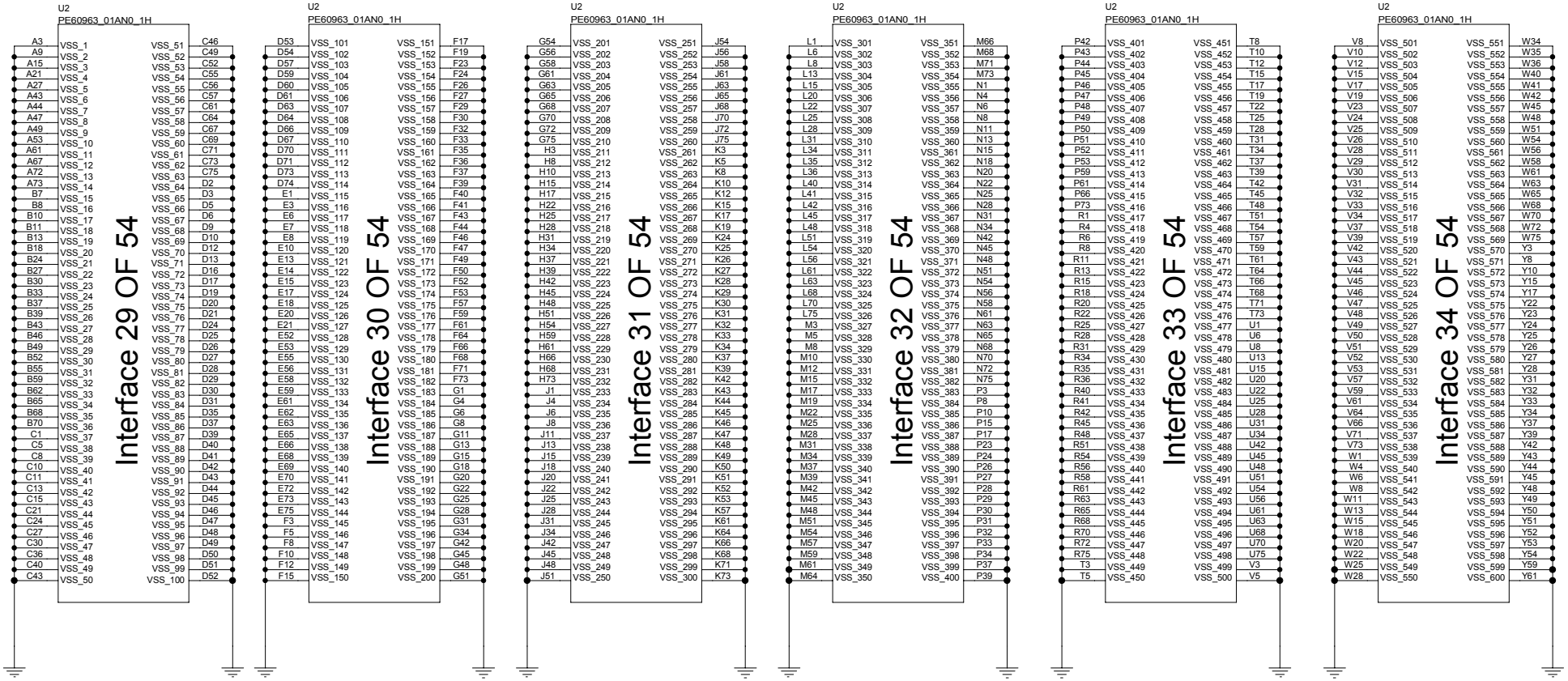

MODULE=---

FUNCTION=---

CNIT TECHNOLOGIES CO.,LTD.				
BOARD NAME BM-H14DSP_VERA			DRAWINGNO CNIT0302K1D0DL	
DESIGNED	ZHUHUI 00746	DATE 2024/10/22	SHEET 62 OF 276	REV
REVIEWED	GUBIN 00260	DATE 2024/11/22	Thu Jan 02 17:44:01 2025	

THIS DOCUMENT AND THE TECHNICAL DATA DISCLOSED ARE PROPRIETARY TO CNIT TECHNOLOGIES CO., LTD. AND SHALL NOT BE DUPLICATED USED RELEASED OR DISCLOSED WITHOUT EXPRESSING WRITTEN PERMISSION.

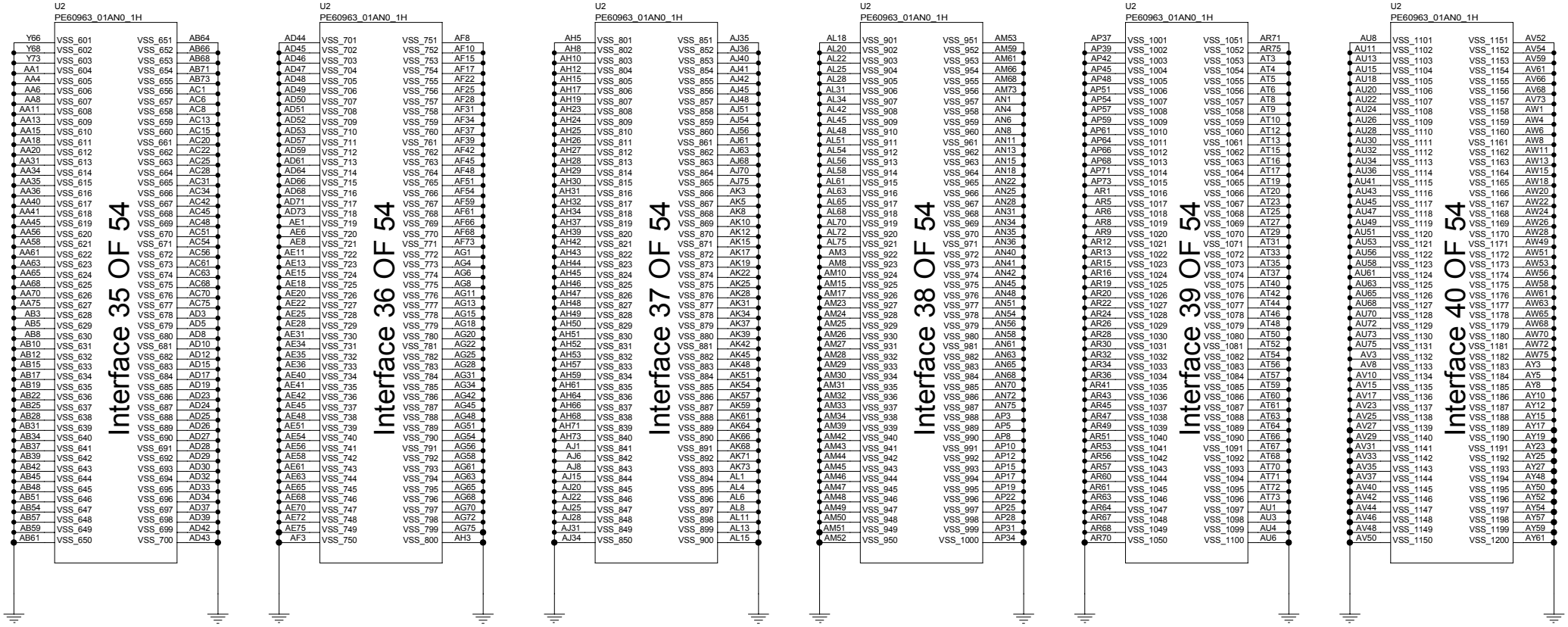

MODULE=---

FUNCTION=---

CNIT TECHNOLOGIES CO.,LTD.				
BOARD NAME BM-H14DSP_VERA			DRAWINGNO CNIT0302K1D0DL	
DESIGNED	ZHUHUI 00746	DATE 2024/10/22	SHEET 63 OF 276	REV
REVIEWED	GUBIN 00260	DATE 2024/11/22	Thu Jan 02 17:44:06 2025	

THIS DOCUMENT AND THE TECHNICAL DATA DISCLOSED ARE PROPRIETARY TO CNIT TECHNOLOGIES CO., LTD. AND SHALL NOT BE DUPLICATED USED RELEASED OR DISCLOSED WITHOUT EXPRESSING WRITTEN PERMISSION.

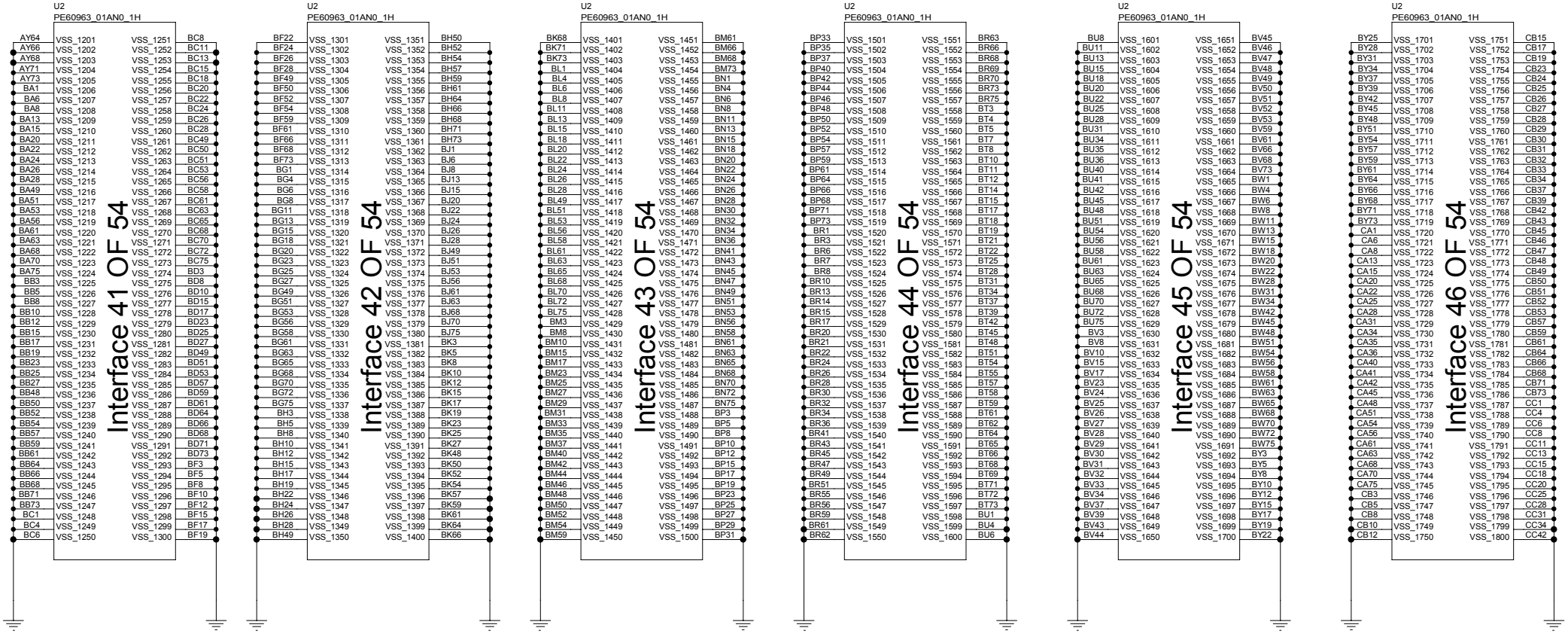

MODULE=---

FUNCTION=---

CNIT TECHNOLOGIES CO.,LTD.				
BOARD NAME BM-H14DSP_VERA			DRAWINGNO CNIT0302K1D0DL	
DESIGNED	ZHUHUI 00746	DATE 2024/10/22	SHEET 64 OF 276	REV
REVIEWED	GUBIN 00260	DATE 2024/11/22	Thu Jan 02 17:44:15 2025	

THIS DOCUMENT AND THE TECHNICAL DATA DISCLOSED ARE PROPRIETARY TO CNIT TECHNOLOGIES CO., LTD. AND SHALL NOT BE DUPLICATED USED RELEASED OR DISCLOSED WITHOUT EXPRESSING WRITTEN PERMISSION.

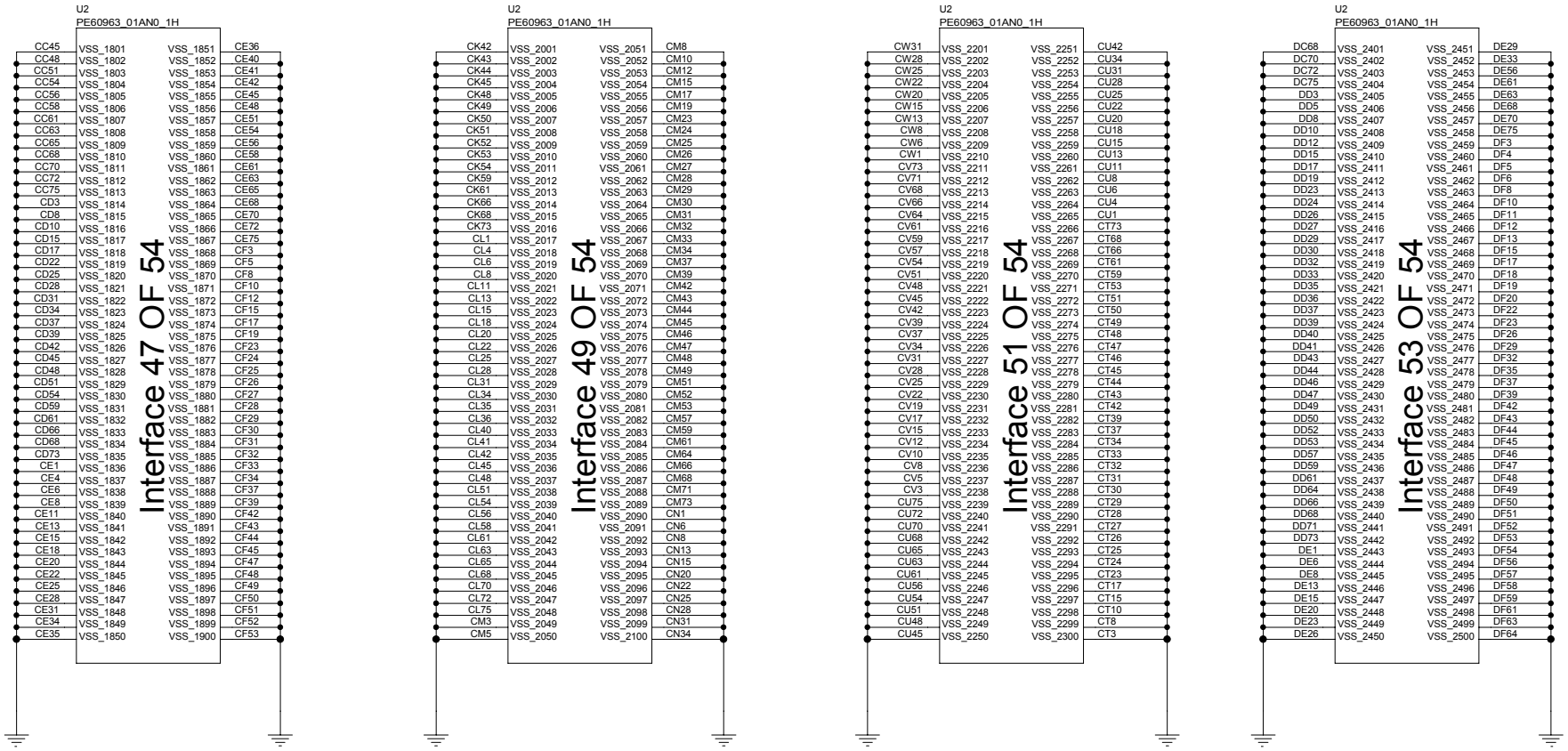

MODULE=---

FUNCTION=---

CNIT TECHNOLOGIES CO.,LTD.				
BOARD NAME BM-H14DSP_VERA			DRAWINGNO CNIT0302K1D0DL	
DESIGNED	ZHUHUI 00746	DATE 2024/10/22	SHEET 65 OF 276	REV
REVIEWED	GUBIN 00260	DATE 2024/11/22	Thu Jan 02 17:44:20 2025	

THIS DOCUMENT AND THE TECHNICAL DATA DISCLOSED ARE PROPRIETARY TO CNIT TECHNOLOGIES CO., LTD. AND SHALL NOT BE DUPLICATED USED RELEASED OR DISCLOSED WITHOUT EXPRESSING WRITTEN PERMISSION.

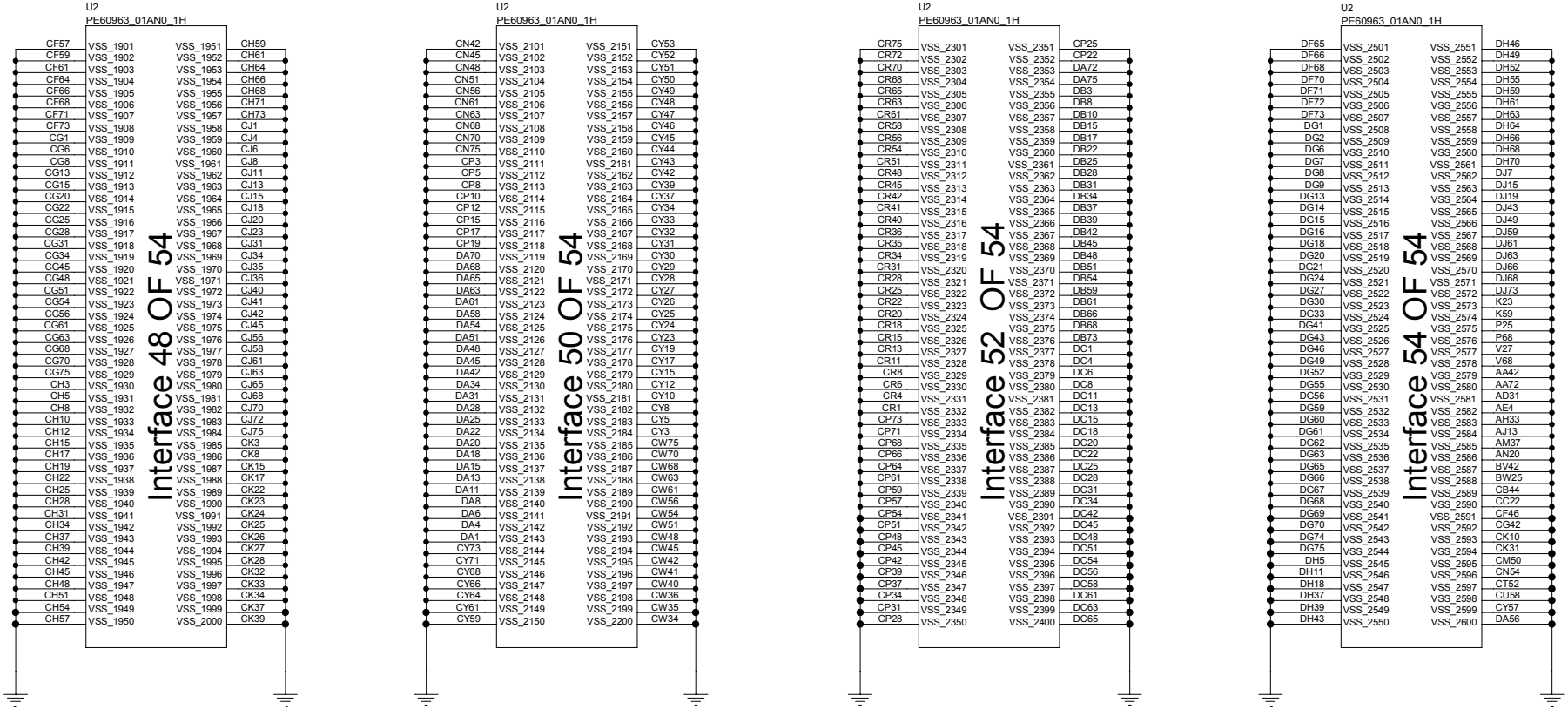

MODULE=---

FUNCTION=---

CNIT TECHNOLOGIES CO.,LTD.				
BOARD NAME BM-H14DSP_VERA			DRAWINGNO CNIT0302K1D0DL	
DESIGNED	ZHUHUI 00746	DATE 2024/10/22	SHEET 66 OF 276	REV
REVIEWED	GUBIN 00260	DATE 2024/11/22	Thu Jan 02 17:44:25 2025	

THIS DOCUMENT AND THE TECHNICAL DATA DISCLOSED ARE PROPRIETARY TO CNIT TECHNOLOGIES CO., LTD. AND SHALL NOT BE DUPLICATED USED RELEASED OR DISCLOSED WITHOUT EXPRESSING WRITTEN PERMISSION.

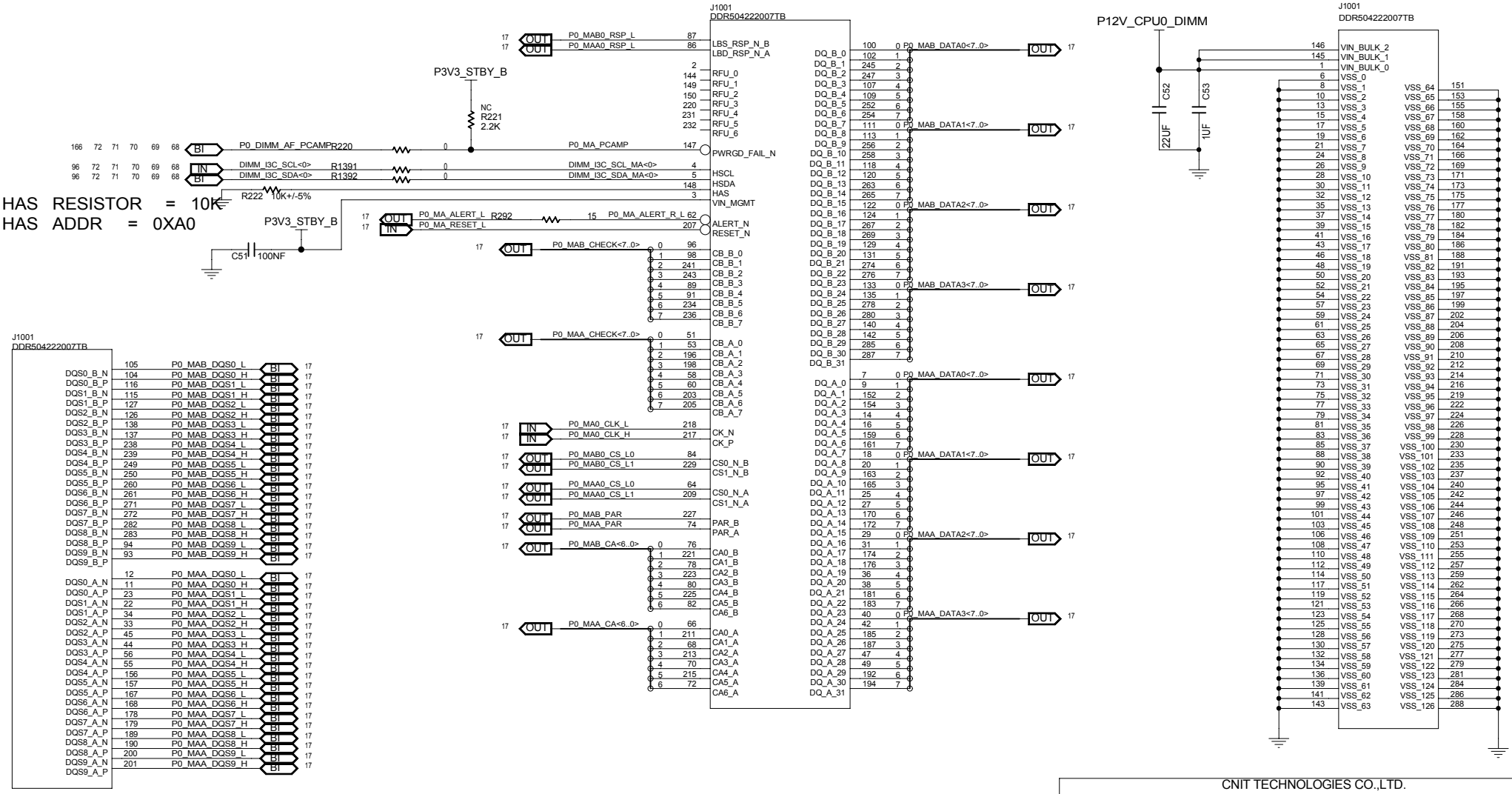

MODULE=---

FUNCTION=---

CNIT TECHNOLOGIES CO.,LTD.				
BOARD NAME	BM-H14DSP_VERA		DRAWINGNO	CNIT0302K1D0DL
DESIGNED	ZHUHUI 00746	DATE 2024/10/22	SHEET 67 OF 276	REV
REVIEWED	GUBIN 00260	DATE 2024/11/22	Thu Jan 02 17:44:30 2025	

THIS DOCUMENT AND THE TECHNICAL DATA DISCLOSED ARE PROPRIETARY TO CNIT TECHNOLOGIES CO., LTD. AND SHALL NOT BE DUPLICATED USED RELEASED OR DISCLOSED WITHOUT EXPRESSING WRITTEN PERMISSION.

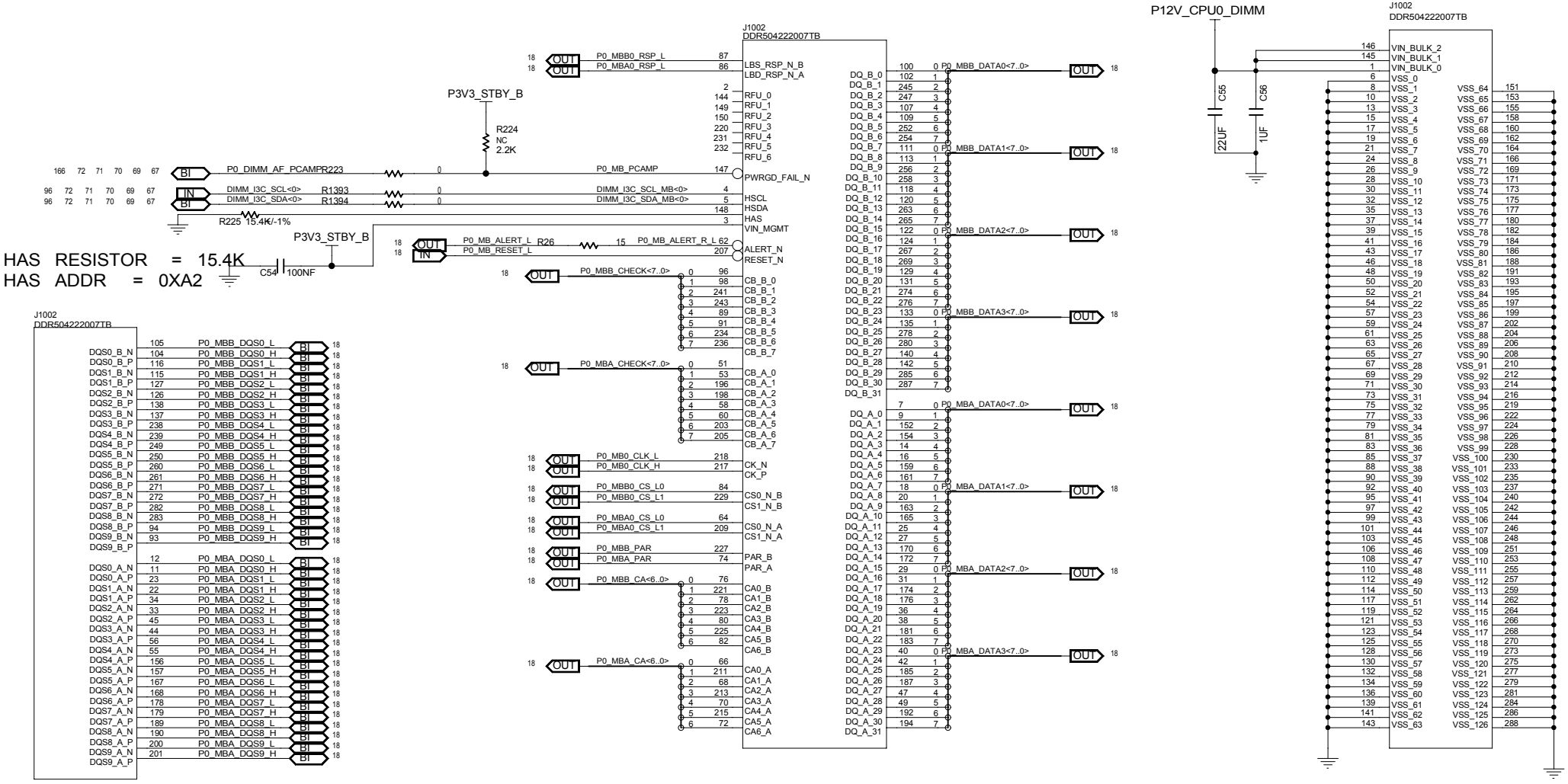

MODULE=---

FUNCTION=---

CNIT TECHNOLOGIES CO.,LTD.				
BOARD NAME BM-H14DSP_VERA			DRAWINGNO CNIT0302K1D0DL	
DESIGNED	ZHUHUI 00746	DATE 2024/10/22	SHEET 68 OF 276	REV
REVIEWED	GUBIN 00260	DATE 2024/11/22	Thu Jan 02 17:44:34 2025	

THIS DOCUMENT AND THE TECHNICAL DATA DISCLOSED ARE PROPRIETARY TO CNIT TECHNOLOGIES CO., LTD. AND SHALL NOT BE DUPLICATED USED RELEASED OR DISCLOSED WITHOUT EXPRESSING WRITTEN PERMISSION.

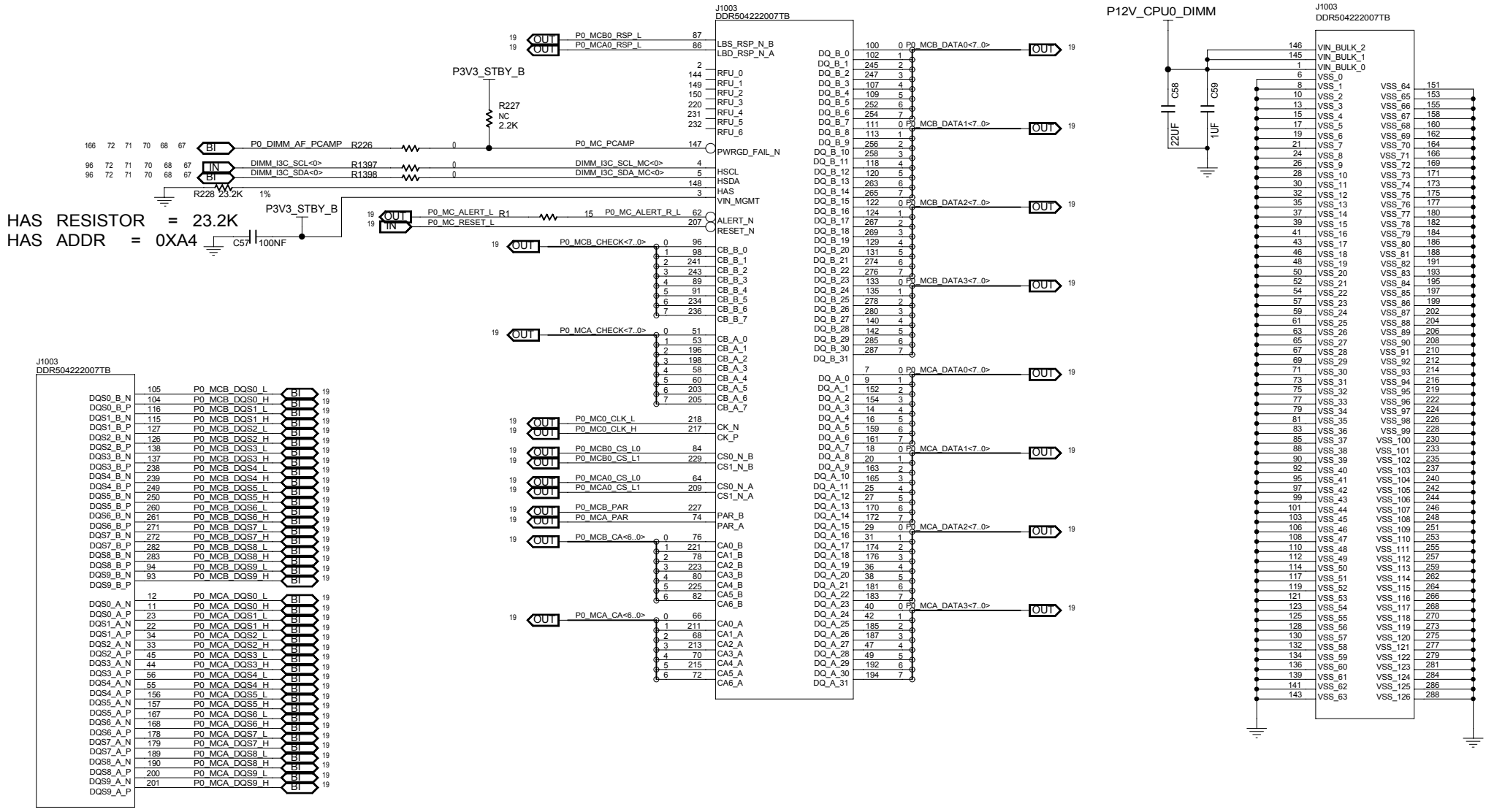

MODULE=---

FUNCTION=---

CNIT TECHNOLOGIES CO.,LTD.				
BOARD NAME BM-H14DSP_VERA			DRAWINGNO CNIT0302K1D0DL	
DESIGNED	ZHUHUI 00746	DATE 2024/10/22	SHEET 69 OF 276	REV
REVIEWED	GUBIN 00260	DATE 2024/11/22	Thu Jan 02 17:44:39 2025	

THIS DOCUMENT AND THE TECHNICAL DATA DISCLOSED ARE PROPRIETARY TO CNIT TECHNOLOGIES CO., LTD. AND SHALL NOT BE DUPLICATED USED RELEASED OR DISCLOSED WITHOUT EXPRESSING WRITTEN PERMISSION.

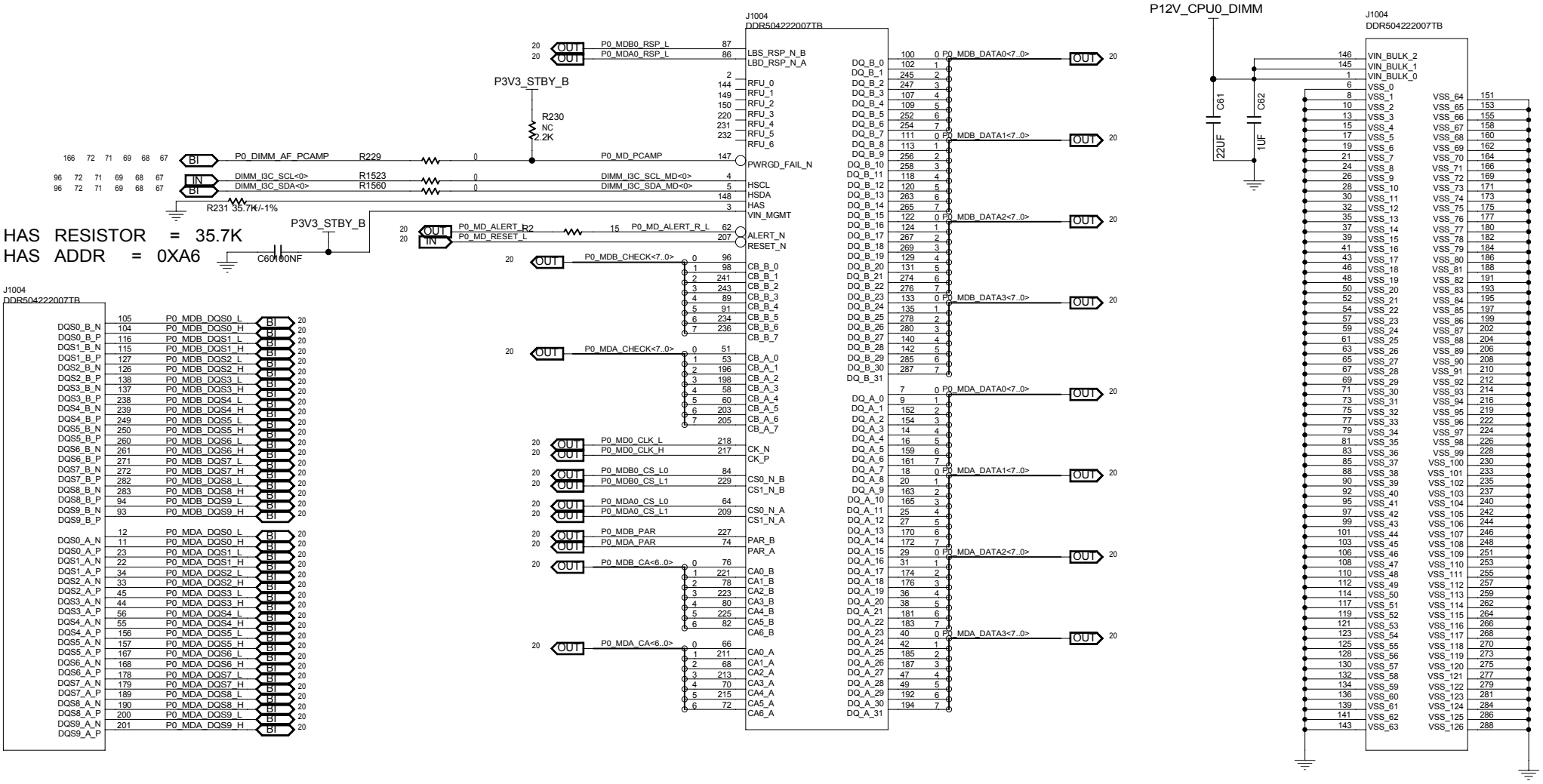

MODULE=---

FUNCTION=---

CNIT TECHNOLOGIES CO.,LTD.				
BOARD NAME BM-H14DSP_VERA			DRAWINGNO CNIT0302K1D0DL	
DESIGNED	ZHUHUI 00746	DATE 2024/10/22	SHEET 70 OF 276	REV
REVIEWED	GUBIN 00260	DATE 2024/11/22	Thu Jan 02 17:44:44 2025	

THIS DOCUMENT AND THE TECHNICAL DATA DISCLOSED ARE PROPRIETARY TO CNIT TECHNOLOGIES CO., LTD. AND SHALL NOT BE DUPLICATED USED RELEASED OR DISCLOSED WITHOUT EXPRESSING WRITTEN PERMISSION.

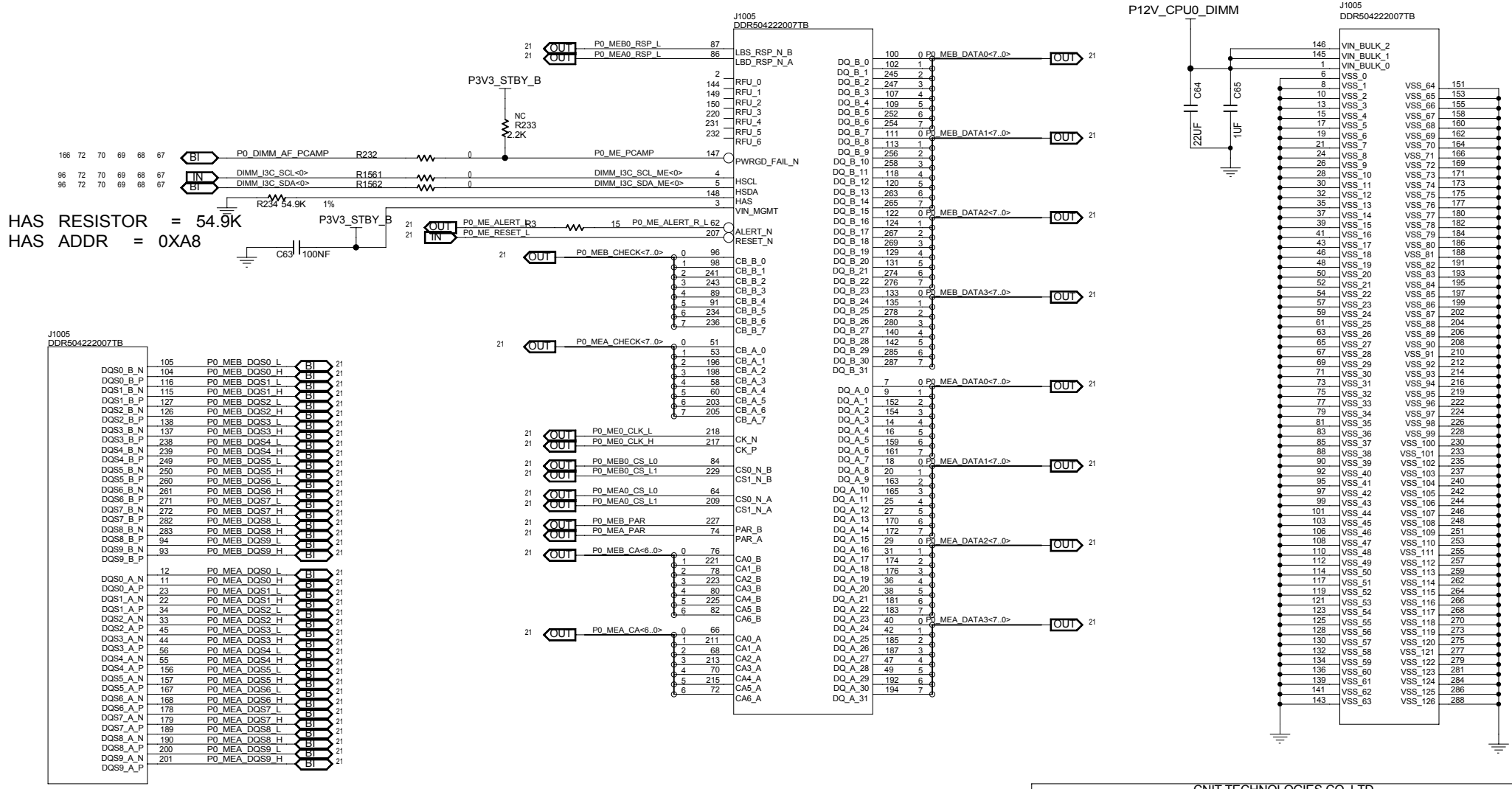

HAS RESISTOR = 54.9K
HAS ADDR = 0XA8

MODULE=---
FUNCTION=---

CNIT TECHNOLOGIES CO.,LTD.				
BOARD NAME BM-H14DSP_VERA			DRAWINGNO CNIT0302K1D0DL	
DESIGNED	ZHUHUI 00746	DATE 2024/10/22	SHEET 71 OF 276	REV
REVIEWED	GUBIN 00260	DATE 2024/11/22	Thu Jan 02 17:44:48 2025	

THIS DOCUMENT AND THE TECHNICAL DATA DISCLOSED ARE PROPRIETARY TO CNIT TECHNOLOGIES CO., LTD. AND SHALL NOT BE DUPLICATED USED RELEASED OR DISCLOSED WITHOUT EXPRESSING WRITTEN PERMISSION.

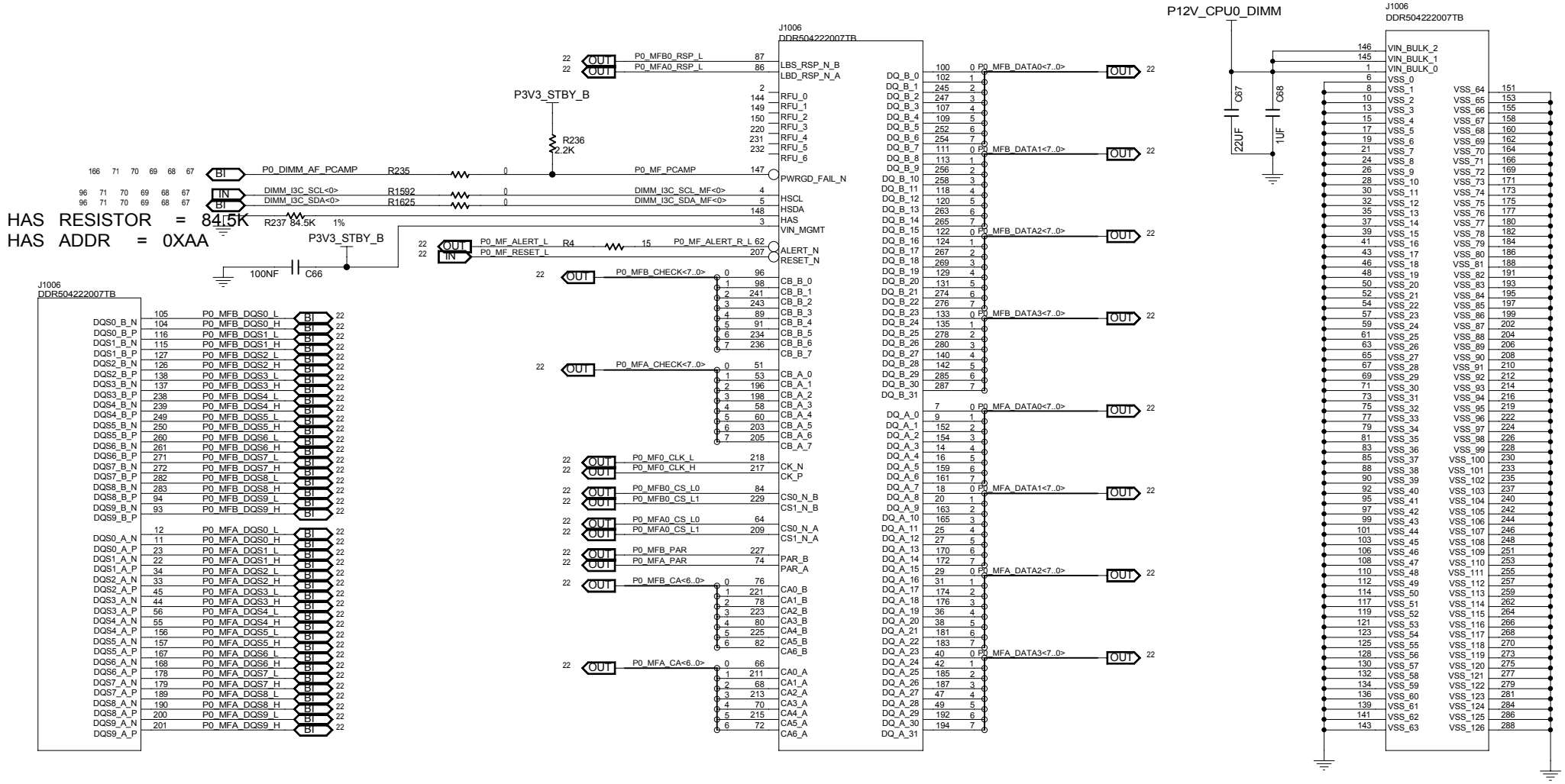

HAS RESISTOR = 84.5K
HAS ADDR = 0XAA

MODULE=---
FUNCTION=---

CNIT TECHNOLOGIES CO.,LTD.				
BOARD NAME BM-H14DSP_VERA			DRAWINGNO CNIT0302K1D0DL	
DESIGNED	ZHUHUI 00746	DATE 2024/10/22	SHEET 72 OF 276	REV
REVIEWED	GUBIN 00260	DATE 2024/11/22	Thu Jan 02 17:44:53 2025	

THIS DOCUMENT AND THE TECHNICAL DATA DISCLOSED ARE PROPRIETARY TO CNIT TECHNOLOGIES CO., LTD. AND SHALL NOT BE DUPLICATED USED RELEASED OR DISCLOSED WITHOUT EXPRESSING WRITTEN PERMISSION.

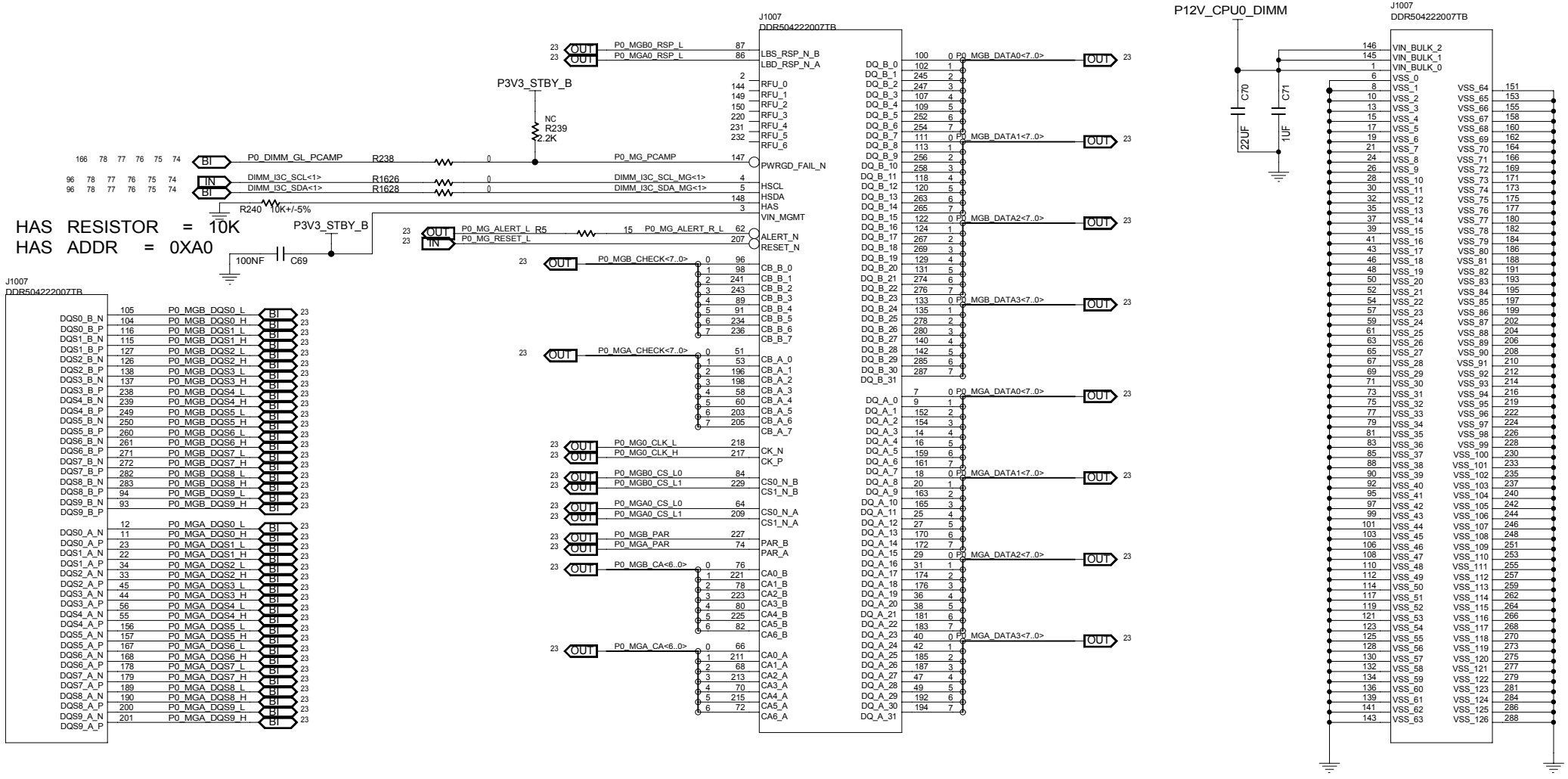

MODULE=---

FUNCTION=---

CNIT TECHNOLOGIES CO.,LTD.				
BOARD NAME BM-H14DSP_VERA			DRAWINGNO CNIT0302K1D0DL	
DESIGNED	ZHUHUI 00746	DATE 2024/10/22	SHEET 73 OF 276	REV
REVIEWED	GUBIN 00260	DATE 2024/11/22	Thu Jan 02 17:44:58 2025	

THIS DOCUMENT AND THE TECHNICAL DATA DISCLOSED ARE PROPRIETARY TO CNIT TECHNOLOGIES CO., LTD. AND SHALL NOT BE DUPLICATED USED RELEASED OR DISCLOSED WITHOUT EXPRESSING WRITTEN PERMISSION.

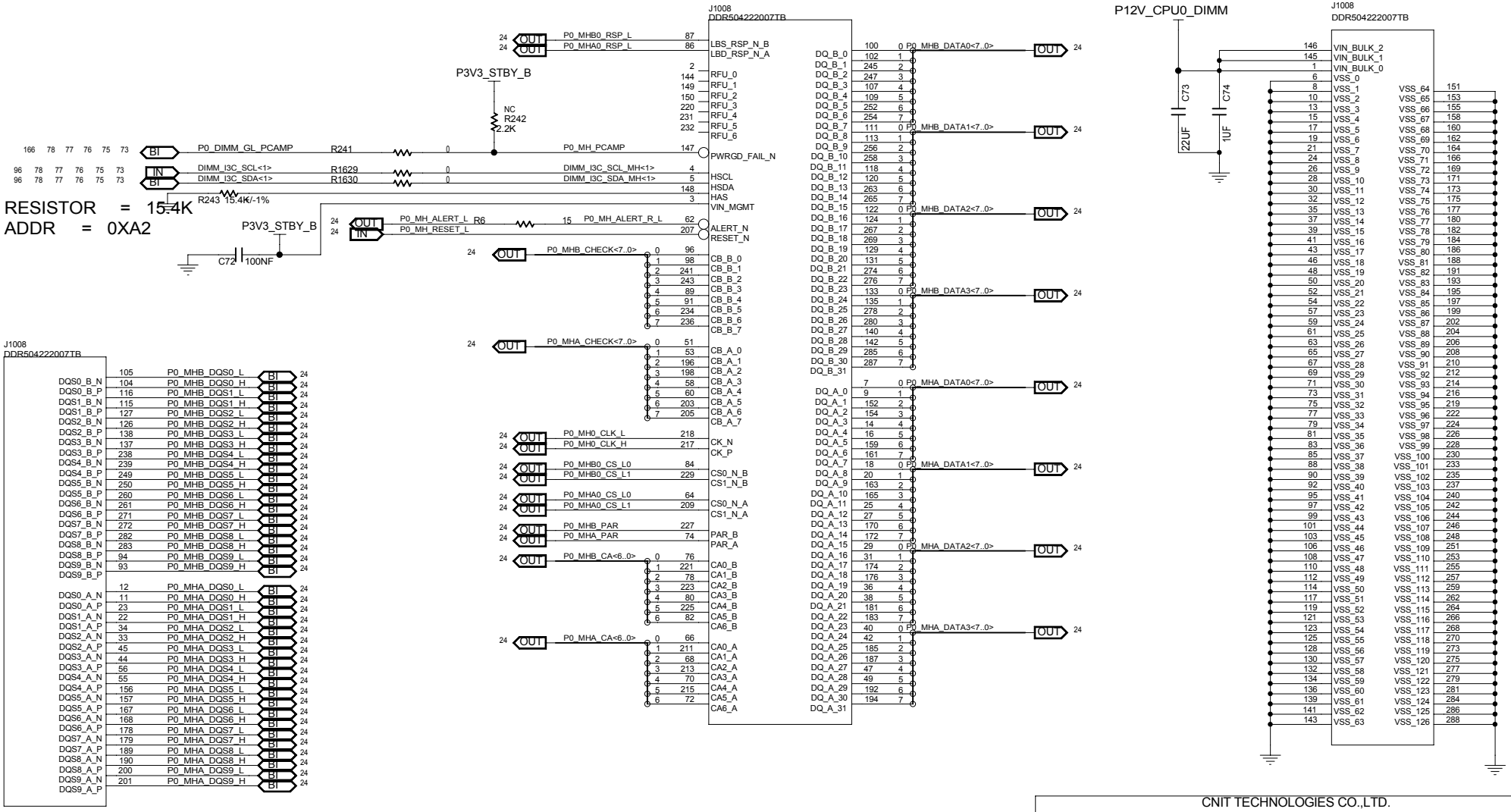

MODULE=---

FUNCTION=---

CNIT TECHNOLOGIES CO.,LTD.				
BOARD NAME BM-H14DSP_VERA			DRAWINGNO CNIT0302K1D0DL	
DESIGNED	ZHUHUI 00746	DATE 2024/10/22	SHEET 74 OF 276	REV
REVIEWED	GUBIN 00260	DATE 2024/11/22	Thu Jan 02 17:45:02 2025	

THIS DOCUMENT AND THE TECHNICAL DATA DISCLOSED ARE PROPRIETARY TO CNIT TECHNOLOGIES CO., LTD. AND SHALL NOT BE DUPLICATED USED RELEASED OR DISCLOSED WITHOUT EXPRESSING WRITTEN PERMISSION.

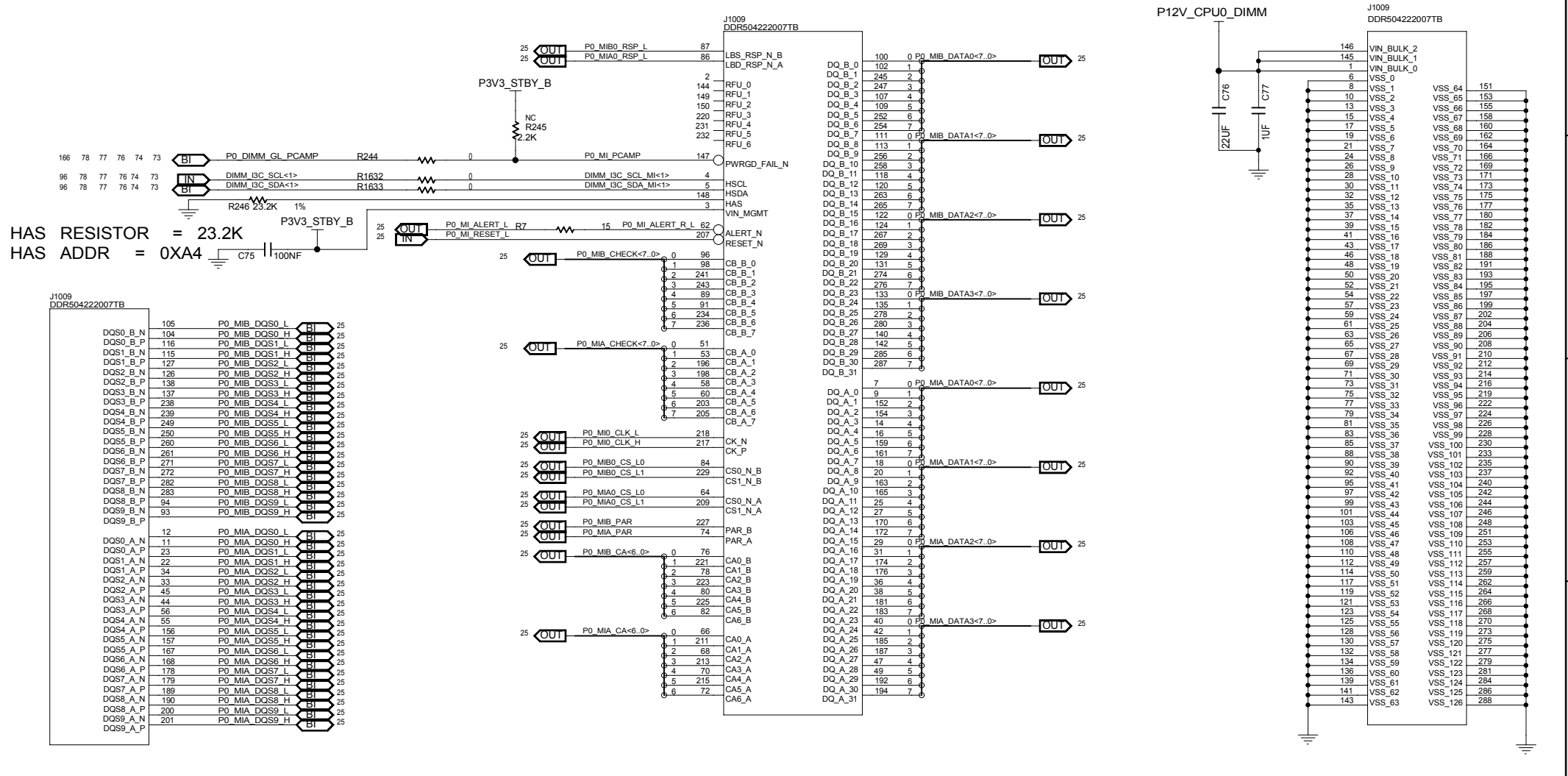

MODULE=---

FUNCTION=---

CNIT TECHNOLOGIES CO.,LTD.				
BOARD NAME BM-H14DSP_VERA			DRAWINGNO CNIT0302K1D0DL	
DESIGNED	ZHUHUI 00746	DATE 2024/10/22	SHEET 75 OF 276	REV
REVIEWED	GUBIN 00260	DATE 2024/11/22	Thu Jan 02 17:45:07 2025	

THIS DOCUMENT AND THE TECHNICAL DATA DISCLOSED ARE PROPRIETARY TO CNIT TECHNOLOGIES CO., LTD. AND SHALL NOT BE DUPLICATED USED RELEASED OR DISCLOSED WITHOUT EXPRESSING WRITTEN PERMISSION.

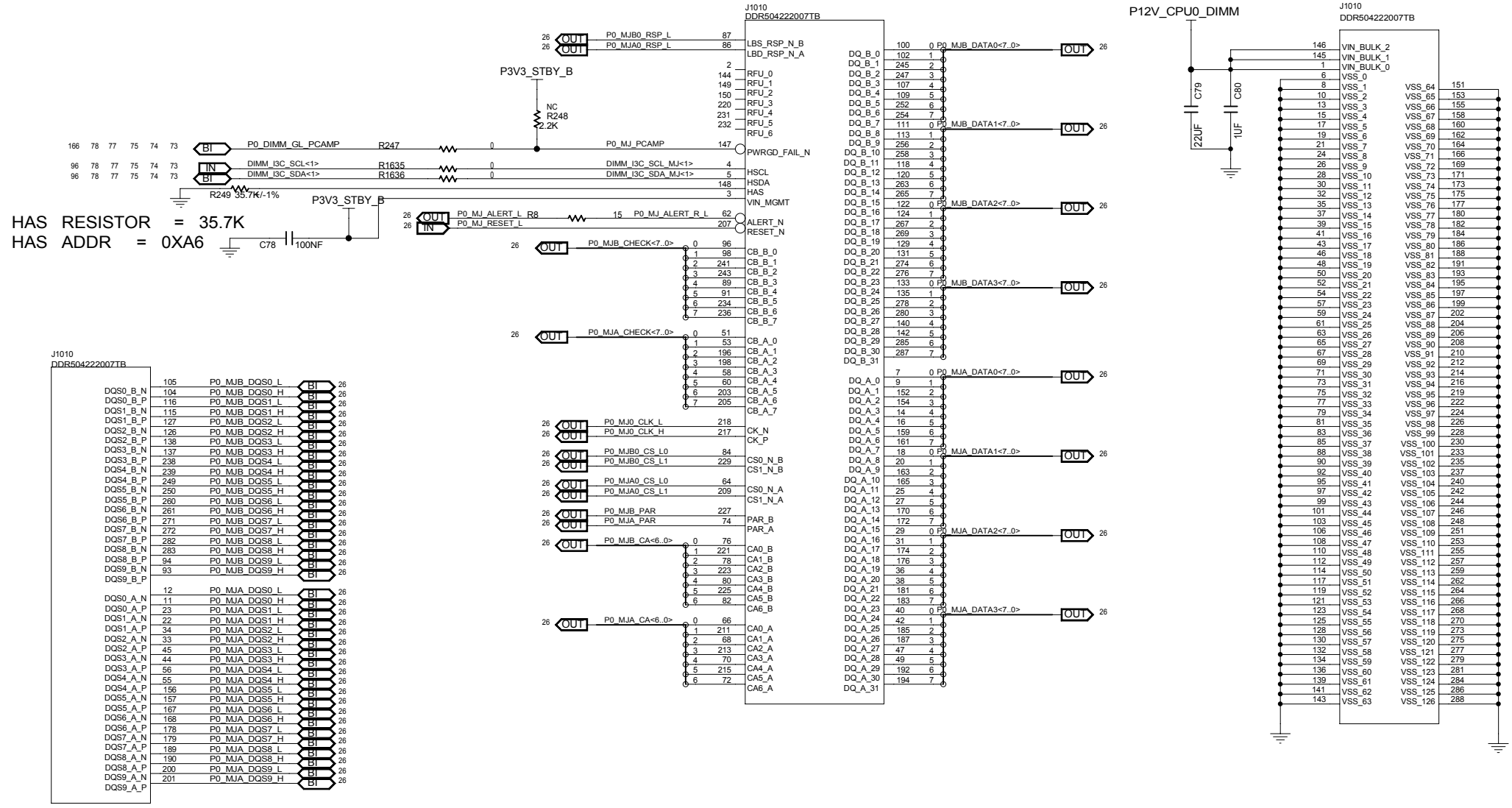

MODULE=---

FUNCTION=---

CNIT TECHNOLOGIES CO.,LTD.				
BOARD NAME BM-H14DSP_VERA			DRAWINGNO CNIT0302K1D0DL	
DESIGNED	ZHUHUI 00746	DATE 2024/10/22	SHEET 76 OF 276	REV
REVIEWED	GUBIN 00260	DATE 2024/11/22	Thu Jan 02 17:45:12 2025	

THIS DOCUMENT AND THE TECHNICAL DATA DISCLOSED ARE PROPRIETARY TO CNIT TECHNOLOGIES CO., LTD. AND SHALL NOT BE DUPLICATED USED RELEASED OR DISCLOSED WITHOUT EXPRESSING WRITTEN PERMISSION.

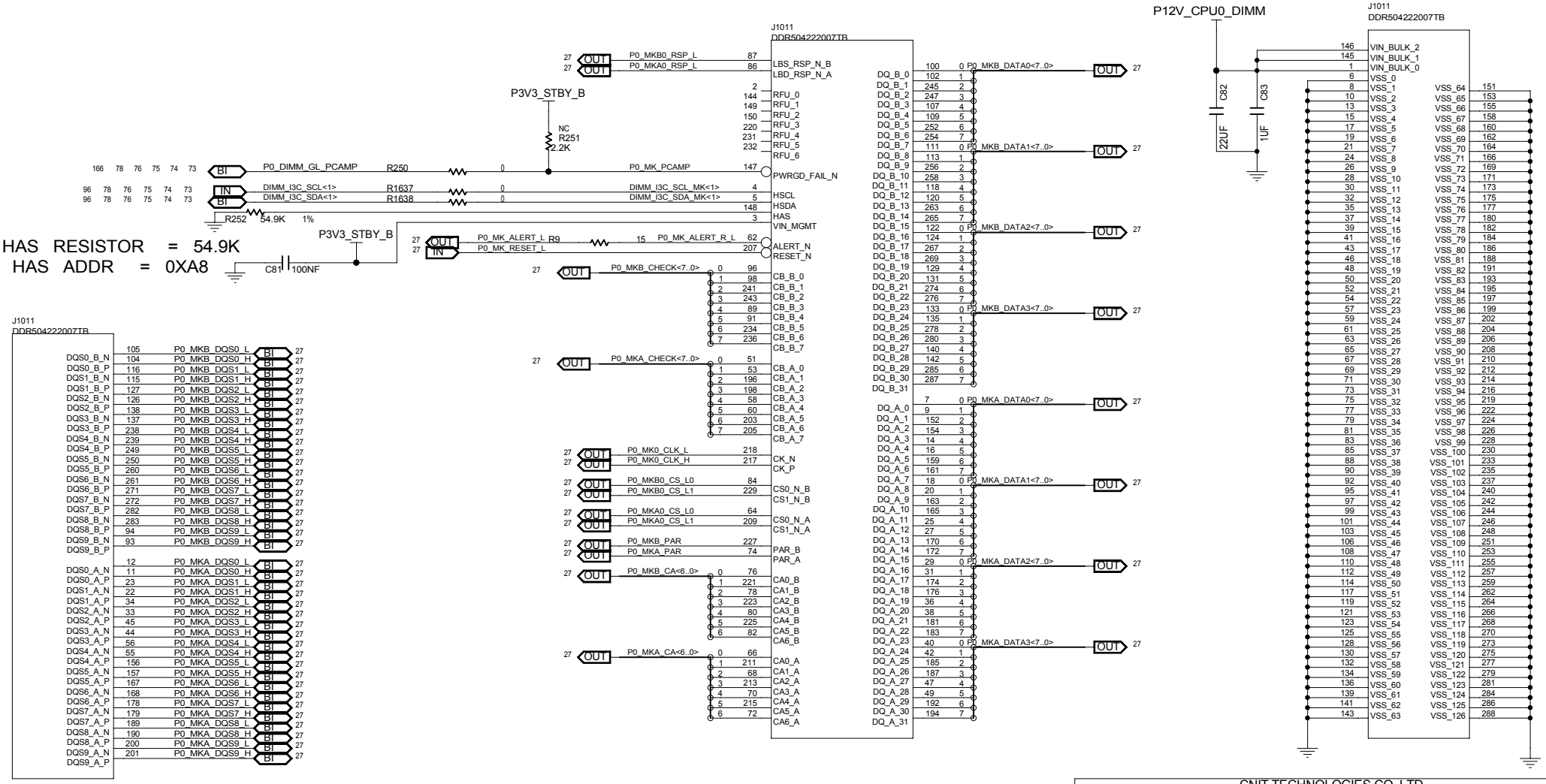

CNIT TECHNOLOGIES CO.,LTD.				
BOARD NAME BM-H14DSP_VERA			DRAWINGNO CNIT0302K1D0DL	
DESIGNED	ZHUHUI 00746	DATE 2024/10/22	SHEET 77 OF 276	REV
REVIEWED	GUBIN 00260	DATE 2024/11/22	Thu Jan 02 17:45:17 2025	

THIS DOCUMENT AND THE TECHNICAL DATA DISCLOSED ARE PROPRIETARY TO CNIT TECHNOLOGIES CO., LTD. AND SHALL NOT BE DUPLICATED USED RELEASED OR DISCLOSED WITHOUT EXPRESSING WRITTEN PERMISSION.

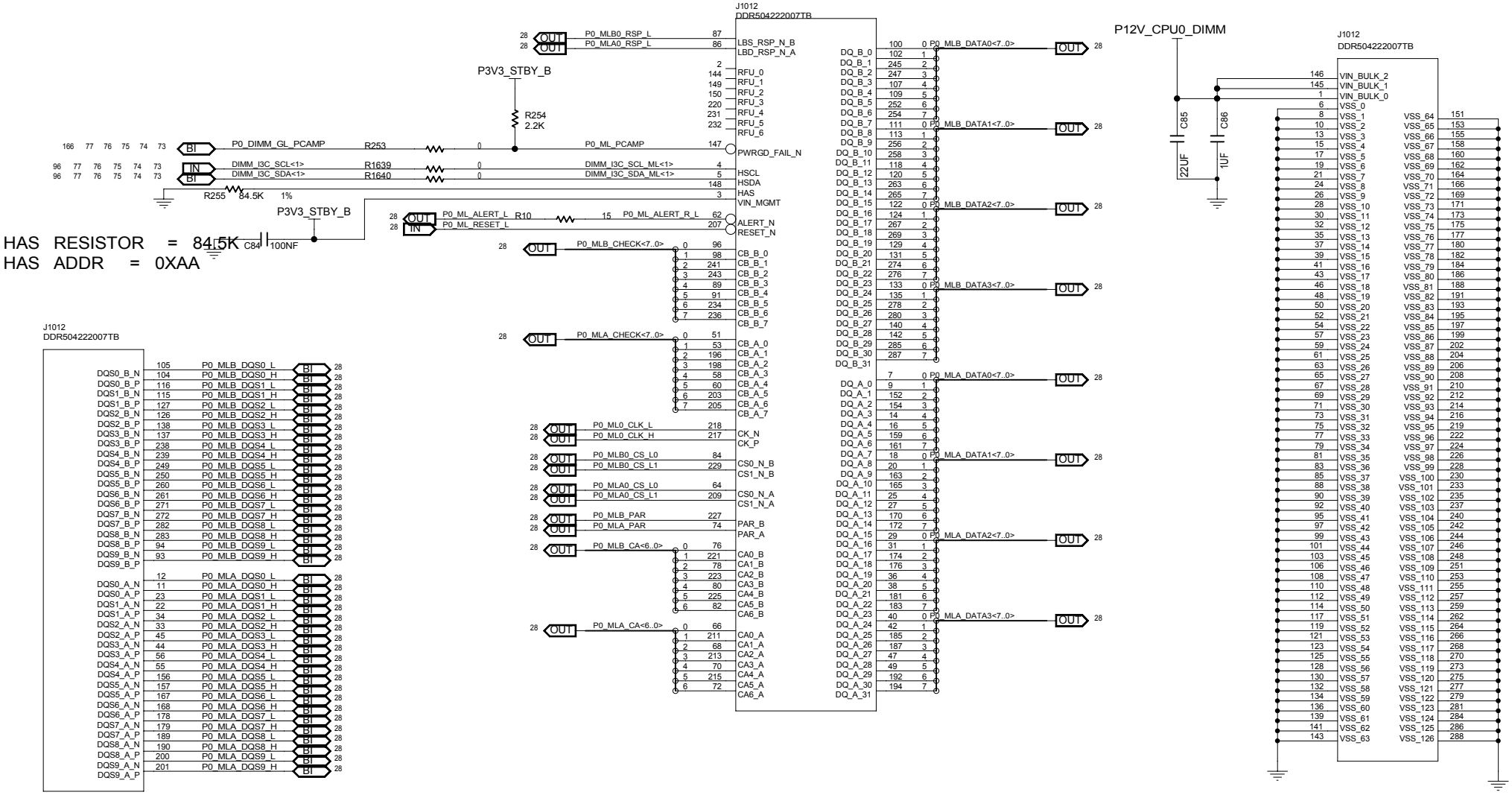

MODULE=---

FUNCTION=---

CNIT TECHNOLOGIES CO.,LTD.				
BOARD NAME BM-H14DSP_VERA			DRAWINGNO CNIT0302K1D0DL	
DESIGNED	ZHUHUI 00746	DATE 2024/10/22	SHEET 78 OF 276	REV
REVIEWED	GUBIN 00260	DATE 2024/11/22	Thu Jan 02 17:45:22 2025	

THIS DOCUMENT AND THE TECHNICAL DATA DISCLOSED ARE PROPRIETARY TO CNIT TECHNOLOGIES CO., LTD. AND SHALL NOT BE DUPLICATED USED RELEASED OR DISCLOSED WITHOUT EXPRESSING WRITTEN PERMISSION.

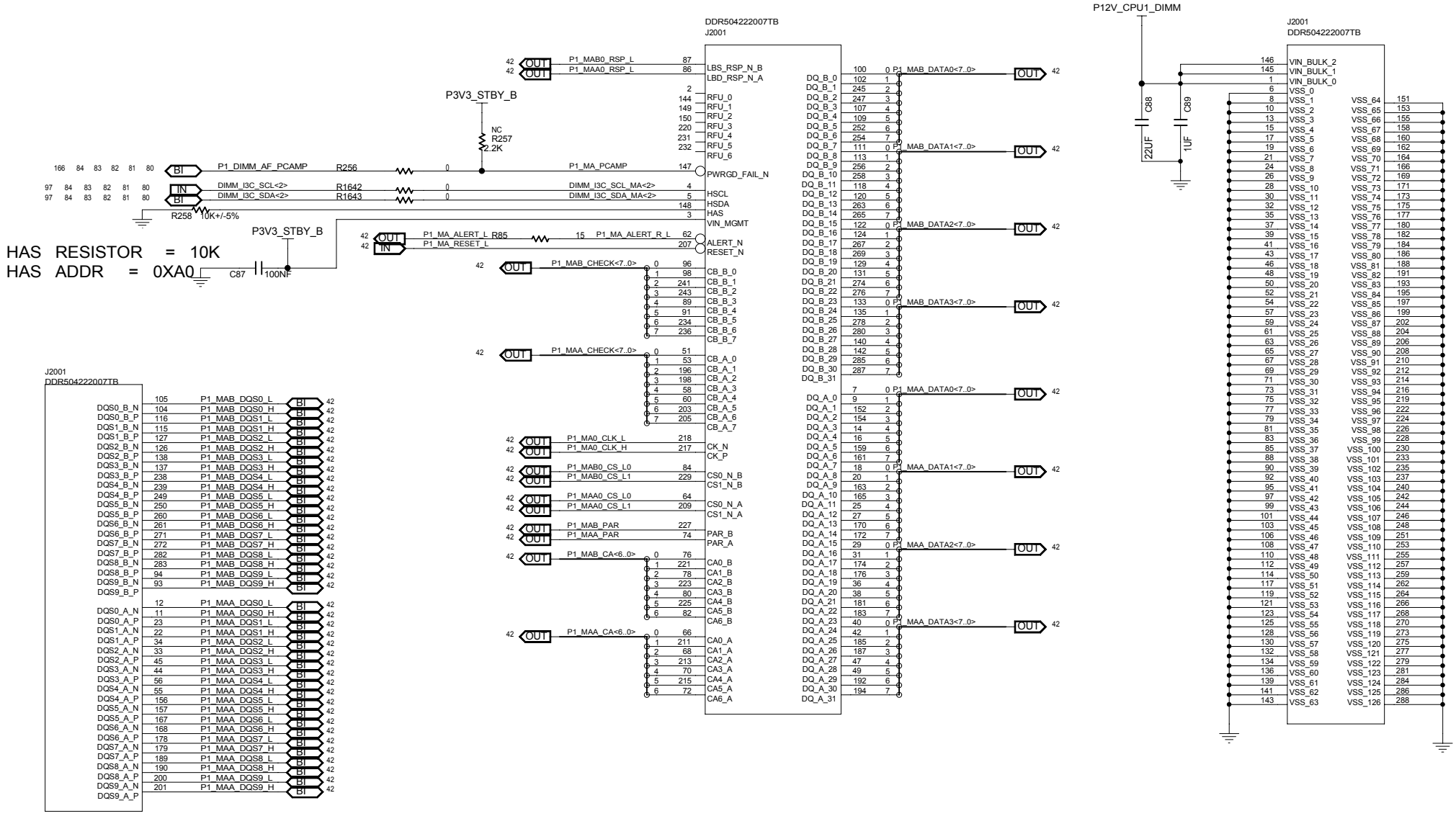

CNIT TECHNOLOGIES CO.,LTD.				
BOARD NAME BM-H14DSP_VERA			DRAWINGNO CNIT0302K1D0DL	
DESIGNED	ZHUHUI 00746	DATE 2024/10/22	SHEET 79 OF 276	REV
REVIEWED	GUBIN 00260	DATE 2024/11/22	Thu Jan 02 17:45:27 2025	

THIS DOCUMENT AND THE TECHNICAL DATA DISCLOSED ARE PROPRIETARY TO CNIT TECHNOLOGIES CO., LTD. AND SHALL NOT BE DUPLICATED USED RELEASED OR DISCLOSED WITHOUT EXPRESSING WRITTEN PERMISSION.

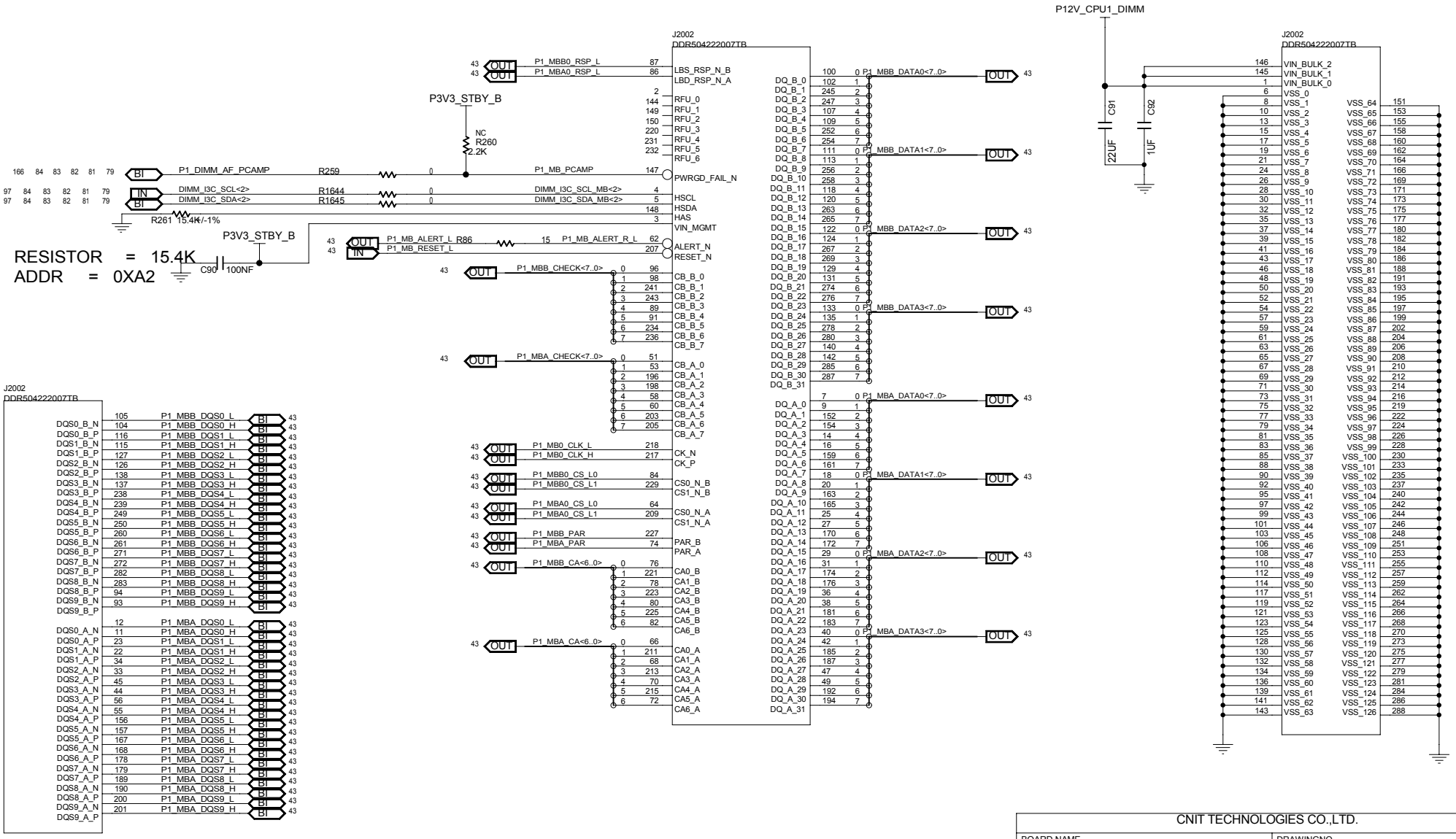

MODULE=---

FUNCTION=---

CNIT TECHNOLOGIES CO.,LTD.				
BOARD NAME BM-H14DSP_VERA			DRAWINGNO CNIT0302K1D0DL	
DESIGNED	ZHUHUI 00746	DATE 2024/10/22	SHEET 80 OF 276	REV
REVIEWED	GUBIN 00260	DATE 2024/11/22	Thu Jan 02 17:45:32 2025	

THIS DOCUMENT AND THE TECHNICAL DATA DISCLOSED ARE PROPRIETARY TO CNIT TECHNOLOGIES CO., LTD. AND SHALL NOT BE DUPLICATED USED RELEASED OR DISCLOSED WITHOUT EXPRESSING WRITTEN PERMISSION.

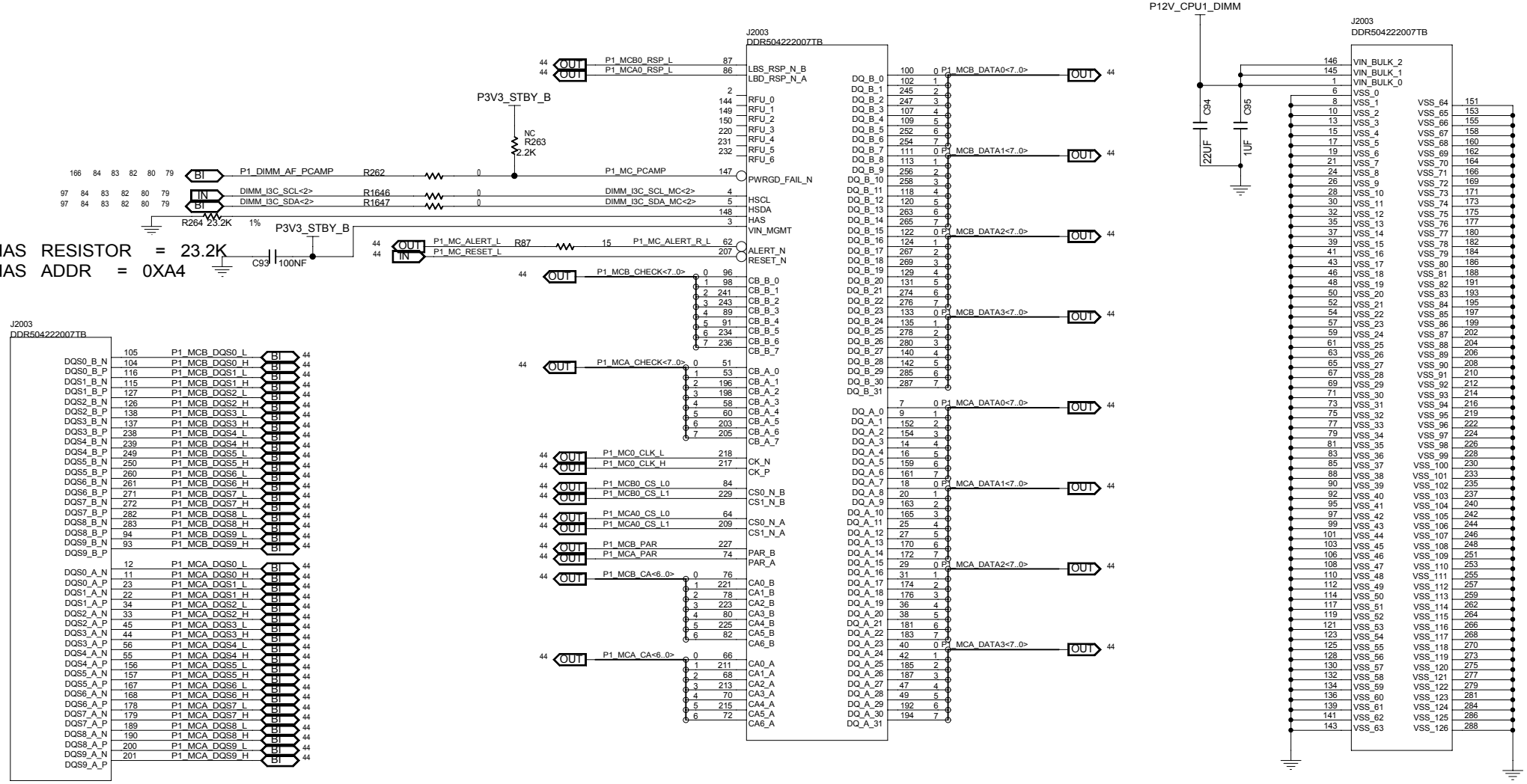

HAS RESISTOR = 23.2K
HAS ADDR = 0XA4

MODULE=---
FUNCTION=---

CNIT TECHNOLOGIES CO.,LTD.				
BOARD NAME BM-H14DSP_VERA			DRAWINGNO CNIT0302K1D0DL	
DESIGNED	ZHUHUI 00746	DATE 2024/10/22	SHEET 81 OF 276	REV
REVIEWED	GUBIN 00260	DATE 2024/11/22	Thu Jan 02 17:45:37 2025	

THIS DOCUMENT AND THE TECHNICAL DATA DISCLOSED ARE PROPRIETARY TO CNIT TECHNOLOGIES CO., LTD. AND SHALL NOT BE DUPLICATED USED RELEASED OR DISCLOSED WITHOUT EXPRESSING WRITTEN PERMISSION.

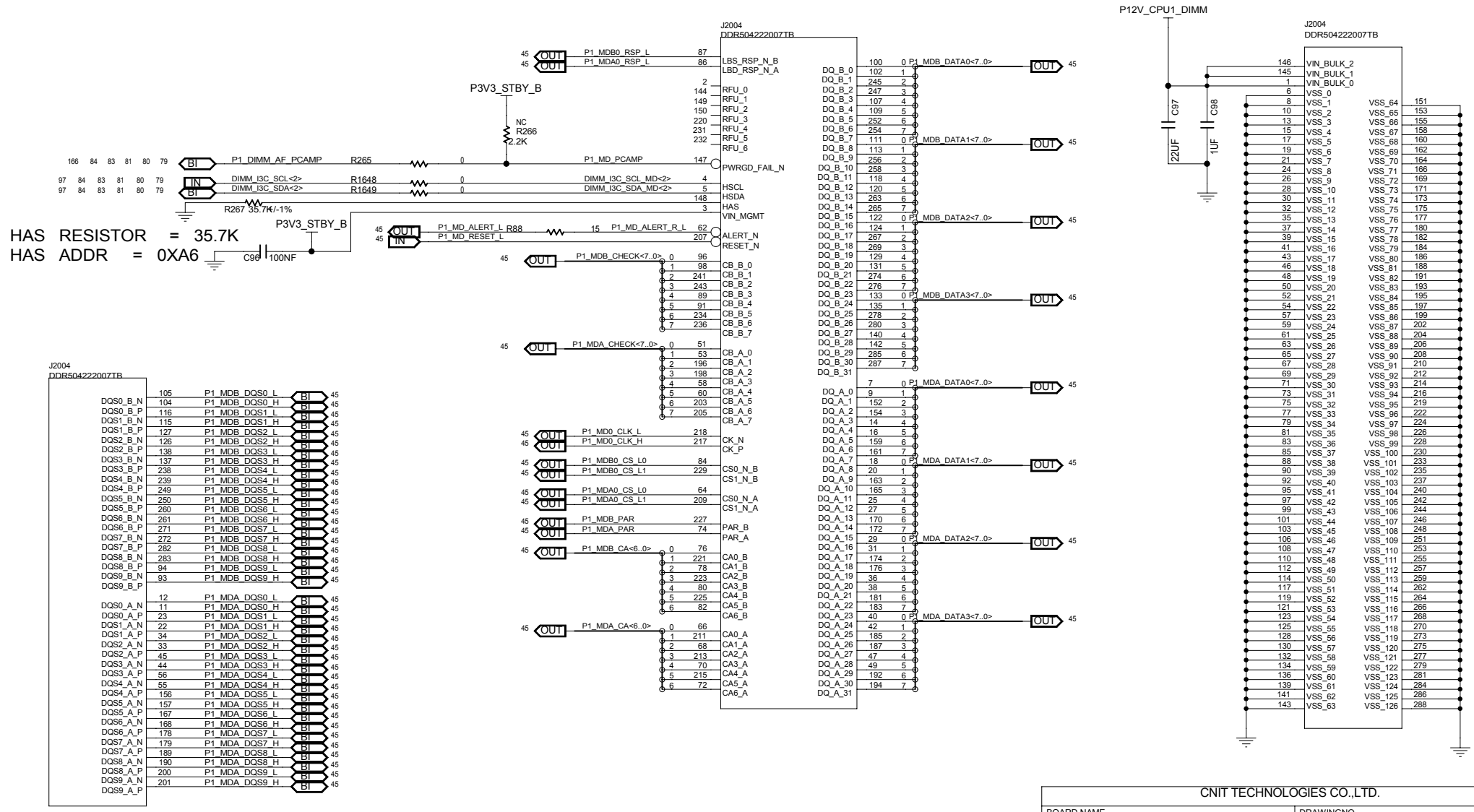

HAS RESISTOR = 35.7K
HAS ADDR = 0XA6

MODULE=---
FUNCTION=---

CNIT TECHNOLOGIES CO.,LTD.				
BOARD NAME BM-H14DSP_VERA			DRAWINGNO CNIT0302K1D0DL	
DESIGNED	ZHUHUI 00746	DATE 2024/10/22	SHEET 82 OF 276	REV
REVIEWED	GUBIN 00260	DATE 2024/11/22	Thu Jan 02 17:45:42 2025	

THIS DOCUMENT AND THE TECHNICAL DATA DISCLOSED ARE PROPRIETARY TO CNIT TECHNOLOGIES CO., LTD. AND SHALL NOT BE DUPLICATED USED RELEASED OR DISCLOSED WITHOUT EXPRESSING WRITTEN PERMISSION.

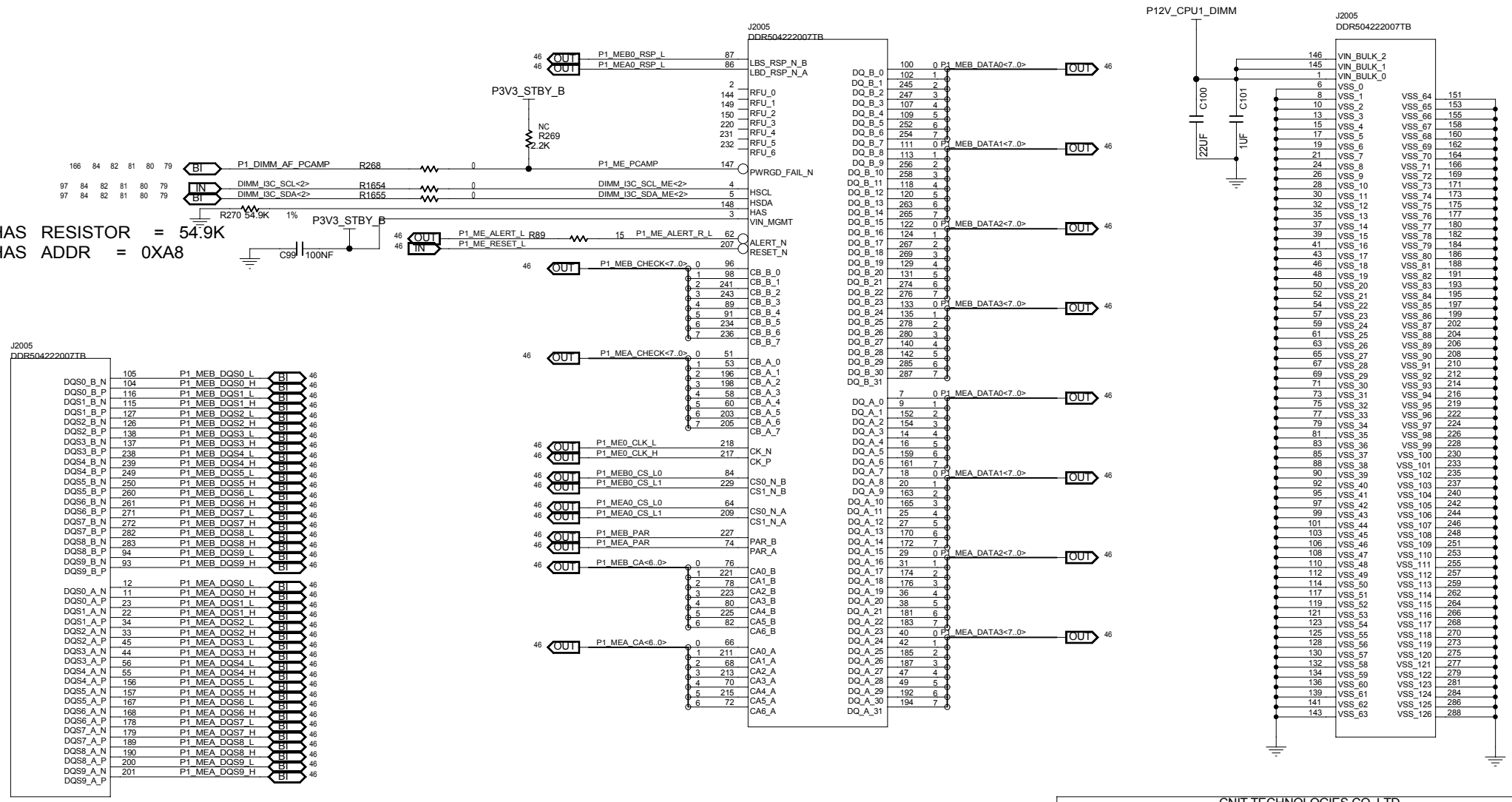

HAS RESISTOR = 54.9K
HAS ADDR = 0XA8

MODULE=---
FUNCTION=---

CNIT TECHNOLOGIES CO.,LTD.				
BOARD NAME BM-H14DSP_VERA			DRAWINGNO CNIT0302K1D0DL	
DESIGNED	ZHUHUI 00746	DATE 2024/10/22	SHEET 83 OF 276	REV
REVIEWED	GUBIN 00260	DATE 2024/11/22	Thu Jan 02 17:45:46 2025	

THIS DOCUMENT AND THE TECHNICAL DATA DISCLOSED ARE PROPRIETARY TO CNIT TECHNOLOGIES CO., LTD. AND SHALL NOT BE DUPLICATED USED RELEASED OR DISCLOSED WITHOUT EXPRESSING WRITTEN PERMISSION.

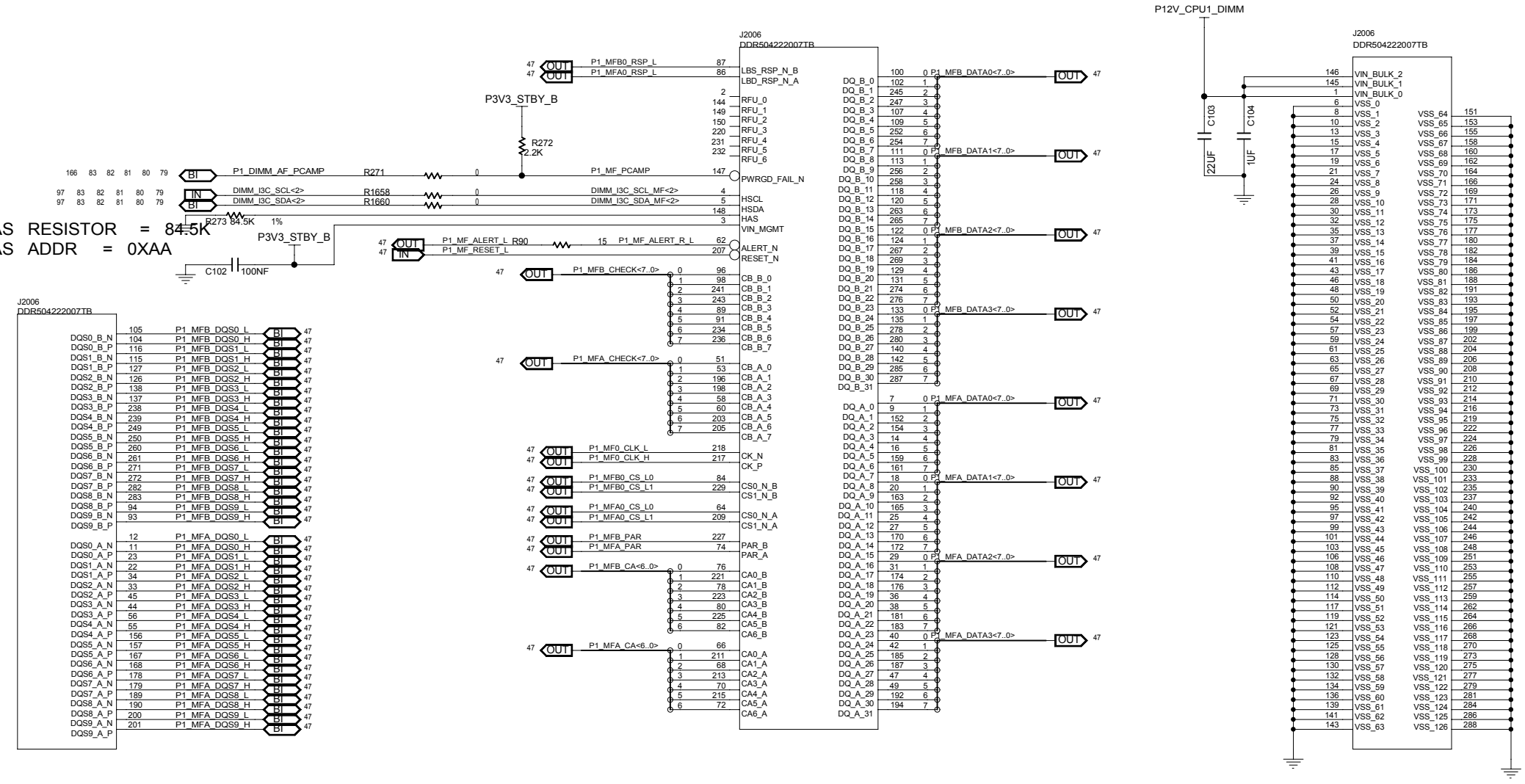

MODULE=---

FUNCTION=---

CNIT TECHNOLOGIES CO.,LTD.				
BOARD NAME BM-H14DSP_VERA			DRAWINGNO CNIT0302K1D0DL	
DESIGNED	ZHUHUI 00746	DATE 2024/10/22	SHEET 84 OF 276	REV
REVIEWED	GUBIN 00260	DATE 2024/11/22	Thu Jan 02 17:45:52 2025	

THIS DOCUMENT AND THE TECHNICAL DATA DISCLOSED ARE PROPRIETARY TO CNIT TECHNOLOGIES CO., LTD. AND SHALL NOT BE DUPLICATED USED RELEASED OR DISCLOSED WITHOUT EXPRESSING WRITTEN PERMISSION.

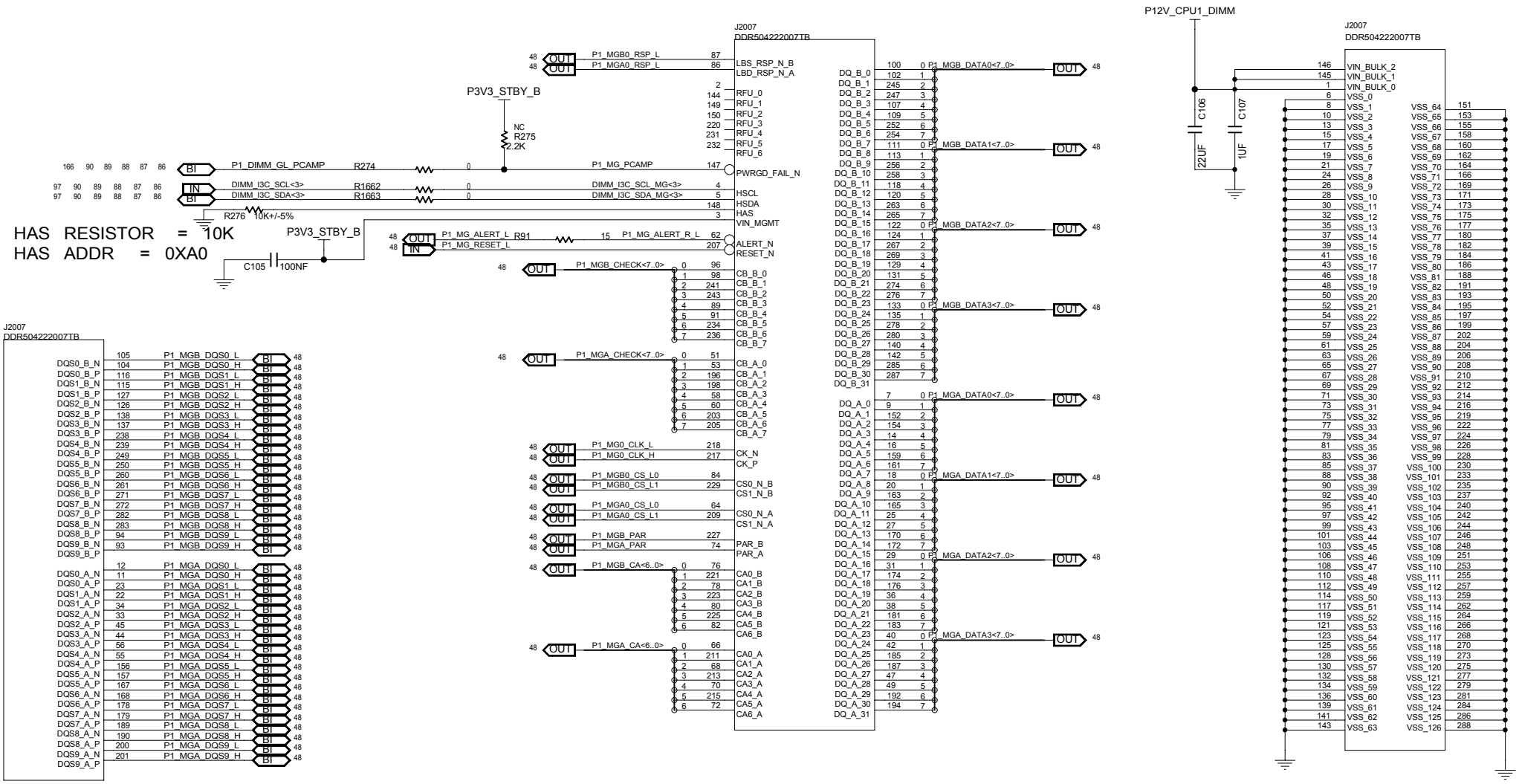

MODULE=---

FUNCTION=---

CNIT TECHNOLOGIES CO.,LTD.				
BOARD NAME BM-H14DSP_VERA			DRAWINGNO CNIT0302K1D0DL	
DESIGNED	ZHUHUI 00746	DATE 2024/10/22	SHEET 85 OF 276	REV
REVIEWED	GUBIN 00260	DATE 2024/11/22	Thu Jan 02 17:45:56 2025	

THIS DOCUMENT AND THE TECHNICAL DATA DISCLOSED ARE PROPRIETARY TO CNIT TECHNOLOGIES CO., LTD. AND SHALL NOT BE DUPLICATED USED RELEASED OR DISCLOSED WITHOUT EXPRESSING WRITTEN PERMISSION.

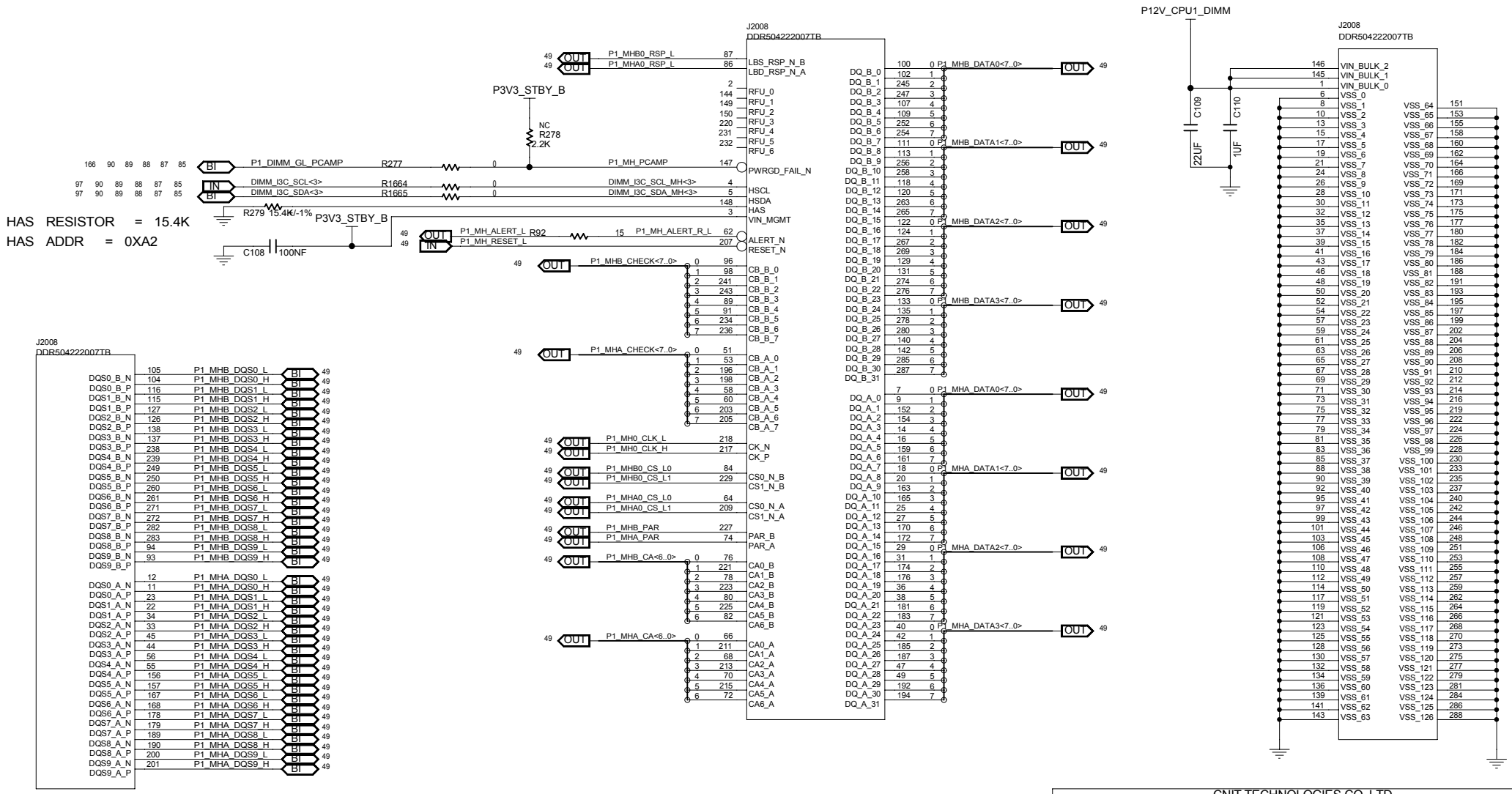

HAS RESISTOR = 15.4K

HAS ADDR = 0XA2

MODULE=---

FUNCTION=---

CNIT TECHNOLOGIES CO.,LTD.				
BOARD NAME BM-H14DSP_VERA			DRAWINGNO CNIT0302K1D0DL	
DESIGNED	ZHUHUI 00746	DATE 2024/10/22	SHEET 86 OF 276	REV
REVIEWED	GUBIN 00260	DATE 2024/11/22	Thu Jan 02 17:46:01 2025	

THIS DOCUMENT AND THE TECHNICAL DATA DISCLOSED ARE PROPRIETARY TO CNIT TECHNOLOGIES CO., LTD. AND SHALL NOT BE DUPLICATED USED RELEASED OR DISCLOSED WITHOUT EXPRESSING WRITTEN PERMISSION.

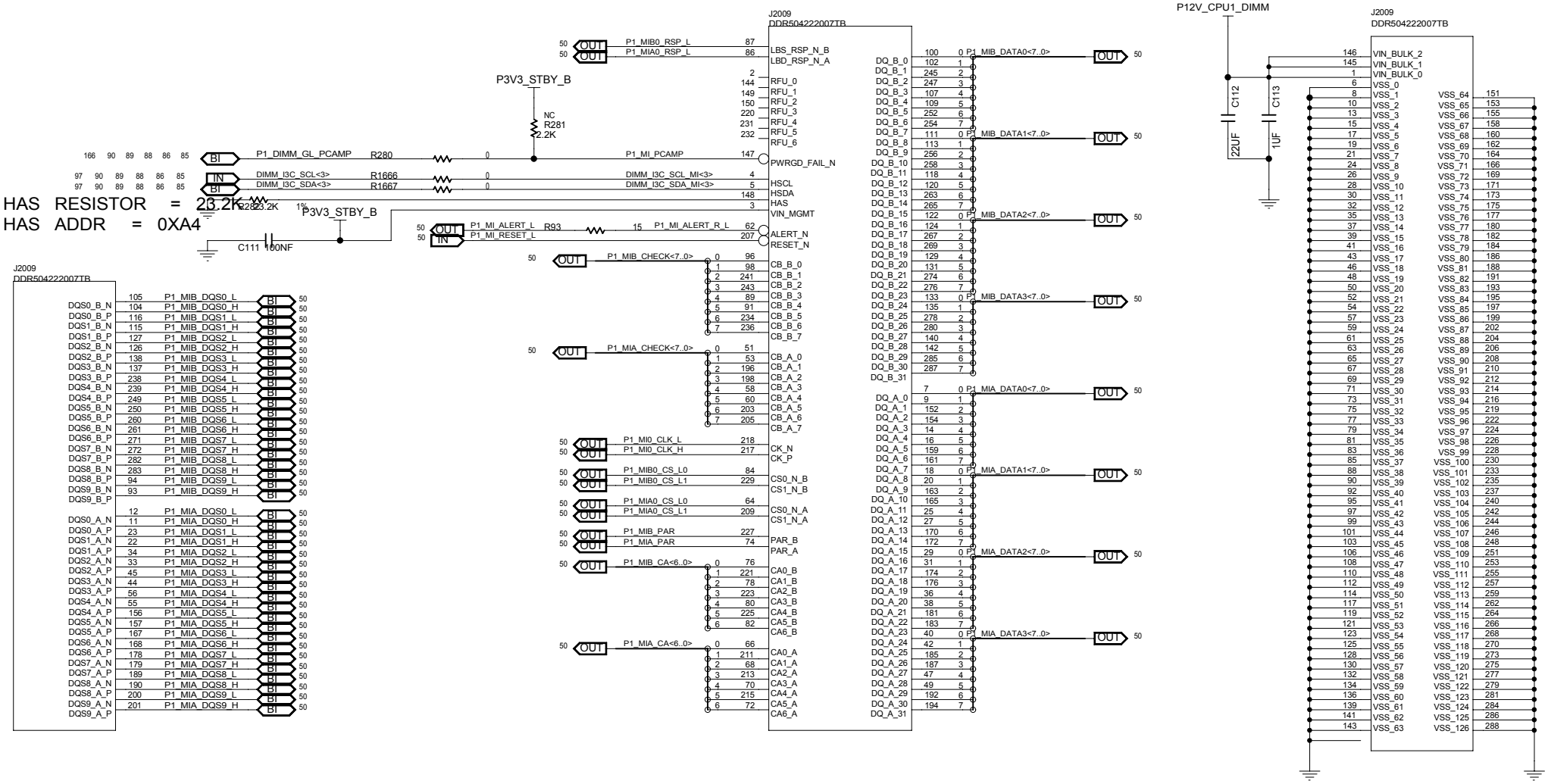

CNIT TECHNOLOGIES CO.,LTD.				
BOARD NAME BM-H14DSP_VERA			DRAWINGNO CNIT0302K1D0DL	
DESIGNED	ZHUHUI 00746	DATE 2024/10/22	SHEET 87 OF 276	REV
REVIEWED	GUBIN 00260	DATE 2024/11/22	Thu Jan 02 17:46:06 2025	

THIS DOCUMENT AND THE TECHNICAL DATA DISCLOSED ARE PROPRIETARY TO CNIT TECHNOLOGIES CO., LTD. AND SHALL NOT BE DUPLICATED USED RELEASED OR DISCLOSED WITHOUT EXPRESSING WRITTEN PERMISSION.

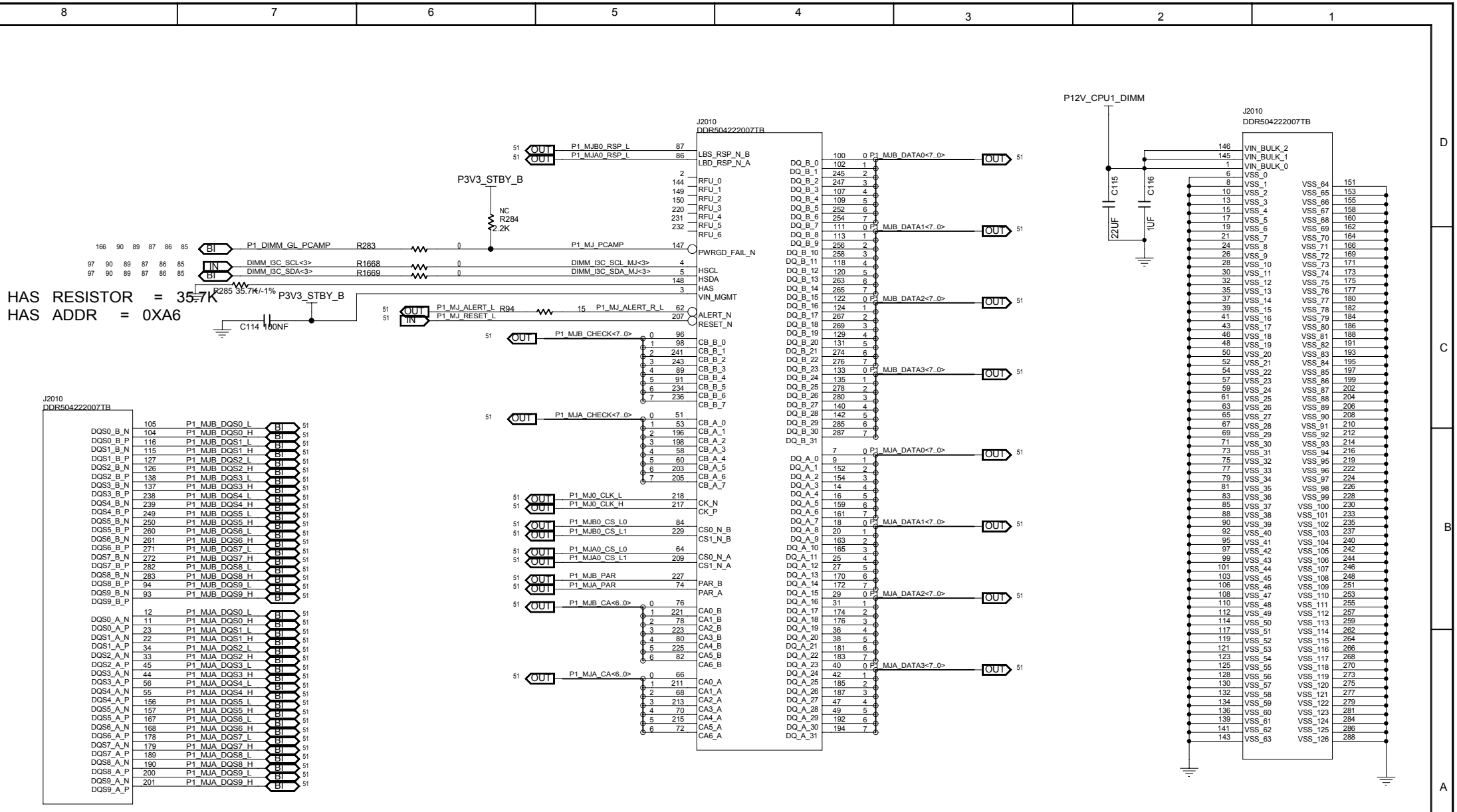

MODULE=---

FUNCTION=---

CNIT TECHNOLOGIES CO.,LTD.				
BOARD NAME BM-H14DSP_VERA			DRAWINGNO CNIT0302K1D0DL	
DESIGNED	ZHUHUI 00746	DATE 2024/10/22	SHEET 88 OF 276	REV
REVIEWED	GUBIN 00260	DATE 2024/11/22	Thu Jan 02 17:46:11 2025	

THIS DOCUMENT AND THE TECHNICAL DATA DISCLOSED ARE PROPRIETARY TO CNIT TECHNOLOGIES CO., LTD. AND SHALL NOT BE DUPLICATED USED RELEASED OR DISCLOSED WITHOUT EXPRESSING WRITTEN PERMISSION.

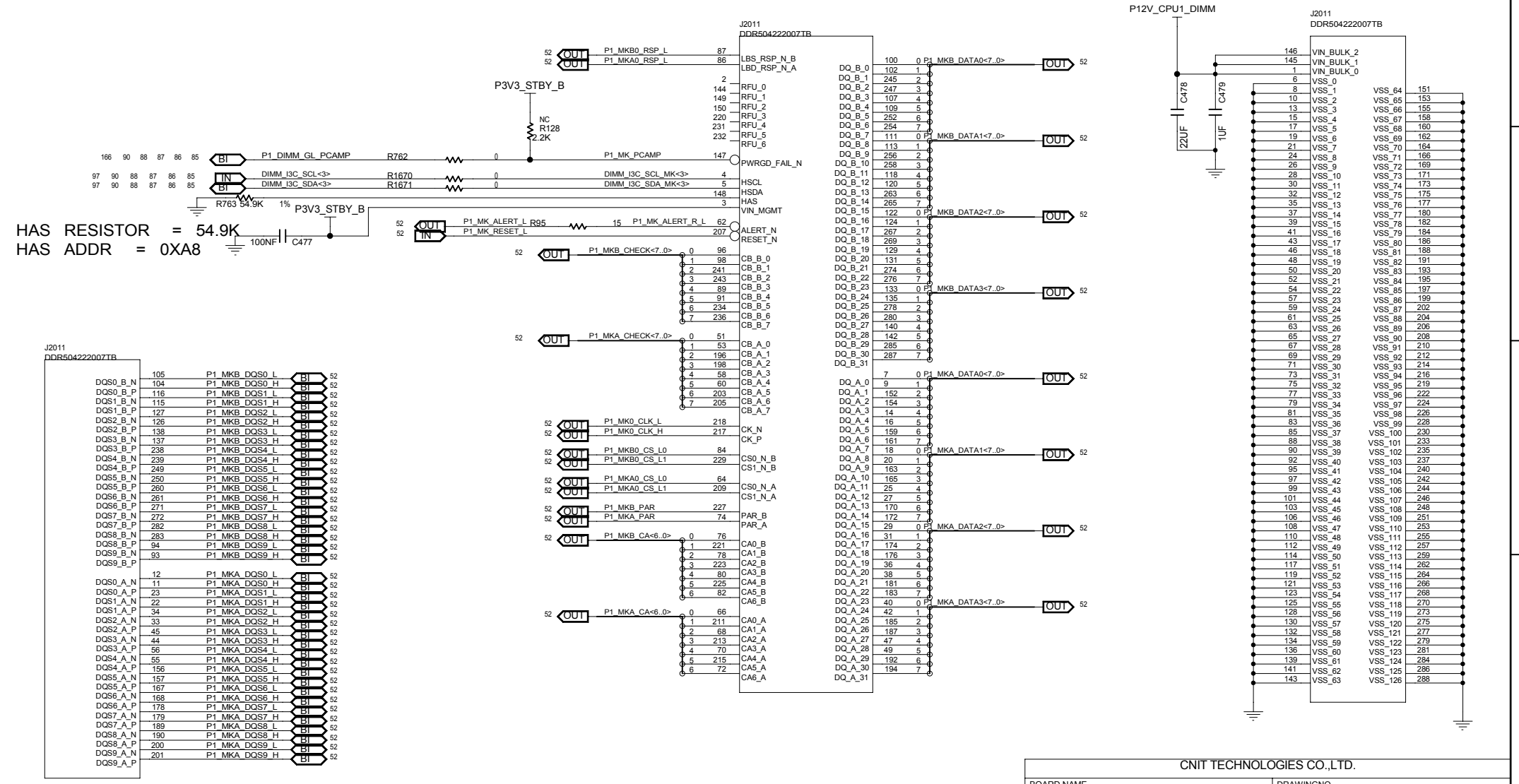

MODULE=---

FUNCTION=---

CNIT TECHNOLOGIES CO.,LTD.				
BOARD NAME BM-H14DSP_VERA			DRAWINGNO CNIT0302K1D0DL	
DESIGNED	ZHUHUI 00746	DATE 2024/10/22	SHEET 89 OF 276	REV
REVIEWED	GUBIN 00260	DATE 2024/11/22	Thu Jan 02 17:46:15 2025	

THIS DOCUMENT AND THE TECHNICAL DATA DISCLOSED ARE PROPRIETARY TO CNIT TECHNOLOGIES CO., LTD. AND SHALL NOT BE DUPLICATED USED RELEASED OR DISCLOSED WITHOUT EXPRESSING WRITTEN PERMISSION.

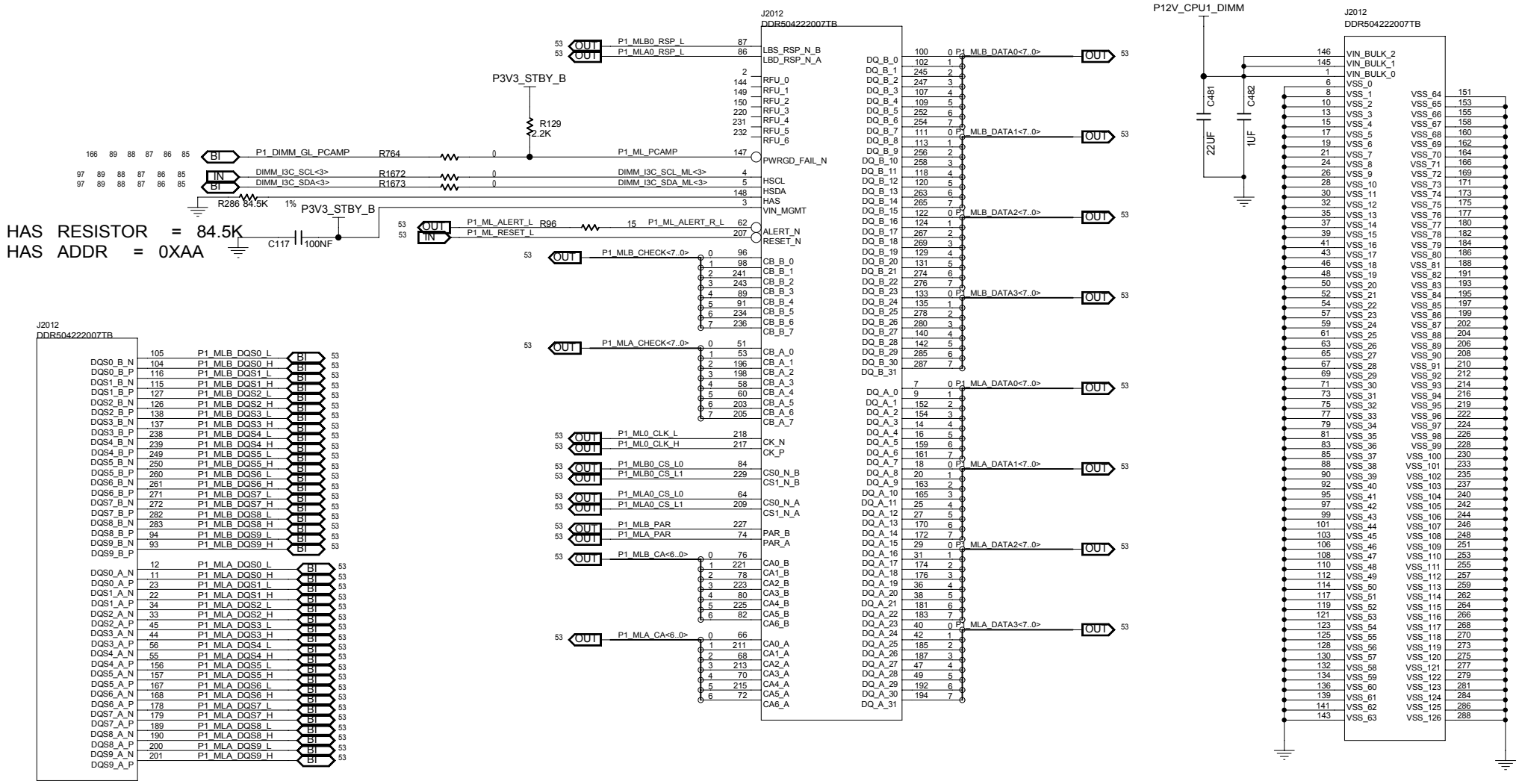

MODULE=---

FUNCTION=---

CNIT TECHNOLOGIES CO.,LTD.				
BOARD NAME BM-H14DSP_VERA			DRAWINGNO CNIT0302K1D0DL	
DESIGNED	ZHUHUI 00746	DATE 2024/10/22	SHEET 90 OF 276	REV
REVIEWED	GUBIN 00260	DATE 2024/11/22	Thu Jan 02 17:46:20 2025	

THIS DOCUMENT AND THE TECHNICAL DATA DISCLOSED ARE PROPRIETARY TO CNIT TECHNOLOGIES CO., LTD. AND SHALL NOT BE DUPLICATED USED RELEASED OR DISCLOSED WITHOUT EXPRESSING WRITTEN PERMISSION.

SPI

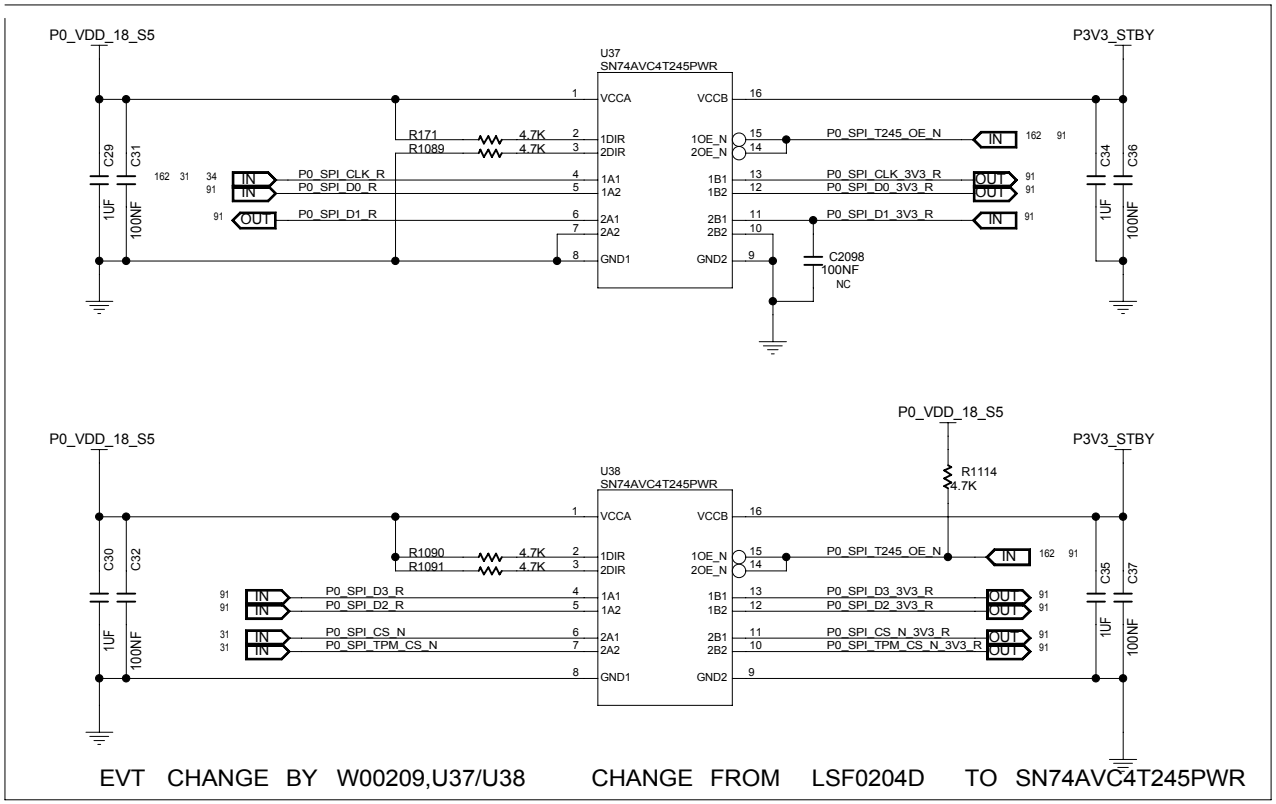

EVT CHANGE BY W00209,U37/U38 CHANGE FROM LSF0204D TO SN74AVC4T245PWR

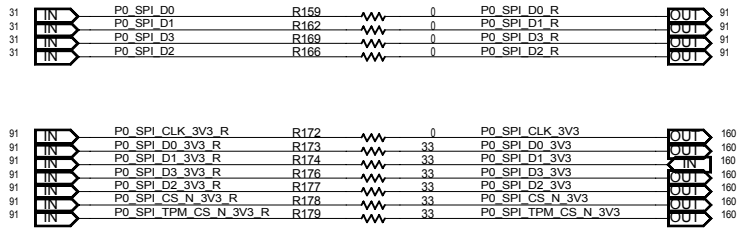

OE_N	Function
H	Hi-z
L	An=Bn

MODULE=---

FUNCTION=---

CNIT TECHNOLOGIES CO.,LTD.				
BOARD NAME BM-H14DSP_VERA			DRAWINGNO CNIT0302K1D0DL	
DESIGNED	ZHUHUI 00746	DATE 2024/10/22	SHEET 91 OF 276	REV
REVIEWED	GUBIN 00260	DATE 2024/11/22	Fri Dec 27 16:29:20 2024	

THIS DOCUMENT AND THE TECHNICAL DATA DISCLOSED ARE PROPRIETARY TO CNIT TECHNOLOGIES CO., LTD. AND SHALL NOT BE DUPLICATED USED RELEASED OR DISCLOSED WITHOUT EXPRESSING WRITTEN PERMISSION.

USB

MODULE=---
FUNCTION=---

CNIT TECHNOLOGIES CO.,LTD.				
BOARD NAME BM-H14DSP_VERA			DRAWINGNO CNIT0302K1D0DL	
DESIGNED	ZHUHUI 00746	DATE 2024/10/22	SHEET 92 OF 276	REV
REVIEWED	GUBIN 00260	DATE 2024/11/22	Wed Oct 23 21:43:05 2024	

THIS DOCUMENT AND THE TECHNICAL DATA DISCLOSED ARE PROPRIETARY TO CNIT TECHNOLOGIES CO., LTD. AND SHALL NOT BE DUPLICATED USED RELEASED OR DISCLOSED WITHOUT EXPRESSING WRITTEN PERMISSION.

USB

NOTES: PVT NC USB CIRCUIT

MODULE=---
FUNCTION=---

CNIT TECHNOLOGIES CO.,LTD.				
BOARD NAME BM-H14DSP_VERA			DRAWINGNO CNIT0302K1D0DL	
DESIGNED	ZHUHUI 00746	DATE 2024/10/22	SHEET 93 OF 276	REV
REVIEWED	GUBIN 00260	DATE 2024/11/22	Wed Oct 23 21:48:13 2024	

THIS DOCUMENT AND THE TECHNICAL DATA DISCLOSED ARE PROPRIETARY TO CNIT TECHNOLOGIES CO., LTD. AND SHALL NOT BE DUPLICATED USED RELEASED OR DISCLOSED WITHOUT EXPRESSING WRITTEN PERMISSION.

RTC

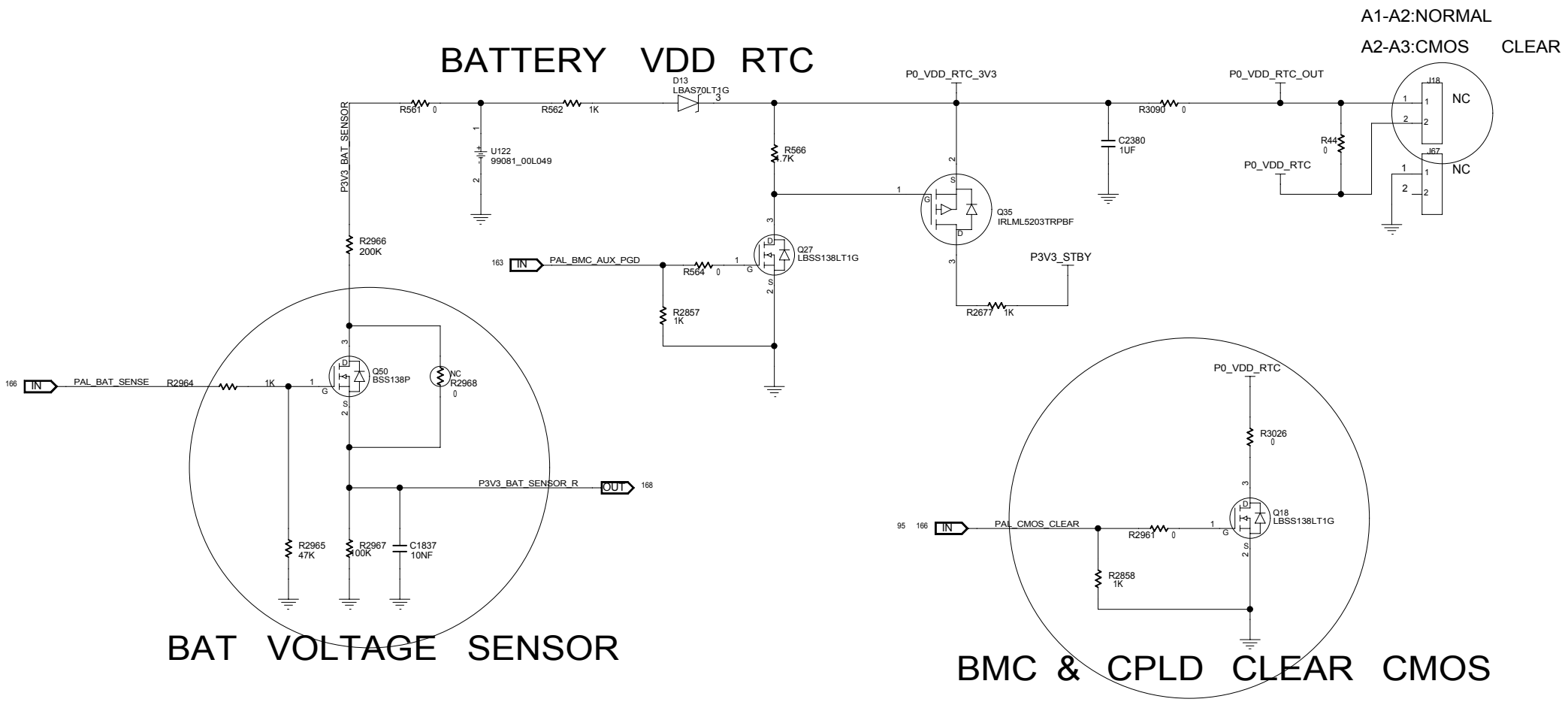

MODULE=---

FUNCTION=---

CNIT TECHNOLOGIES CO.,LTD.				
BOARD NAME BM-H14DSP_VERA			DRAWINGNO CNIT0302K1D0DL	
DESIGNED	ZHUHUI 00746	DATE 2024/10/22	SHEET 94 OF 276	REV
REVIEWED	GUBIN 00260	DATE 2024/11/22	Thu Jan 02 17:52:26 2025	

THIS DOCUMENT AND THE TECHNICAL DATA DISCLOSED ARE PROPRIETARY TO CNIT TECHNOLOGIES CO., LTD. AND SHALL NOT BE DUPLICATED USED RELEASED OR DISCLOSED WITHOUT EXPRESSING WRITTEN PERMISSION.

BMC RTC CLK

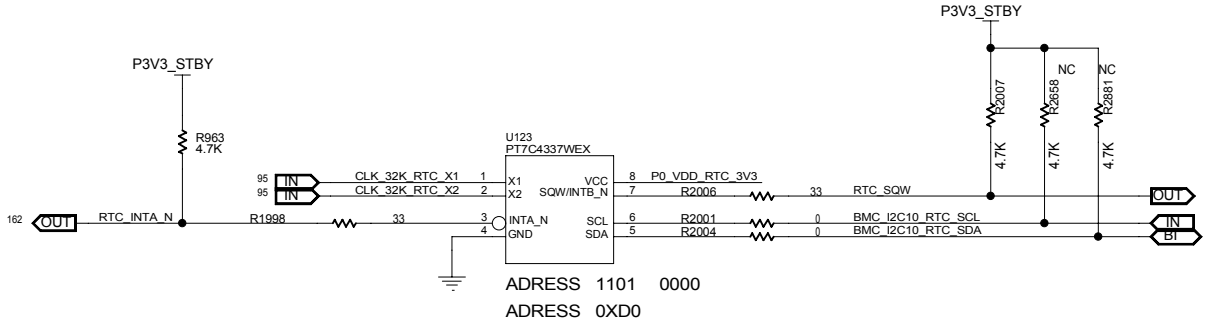

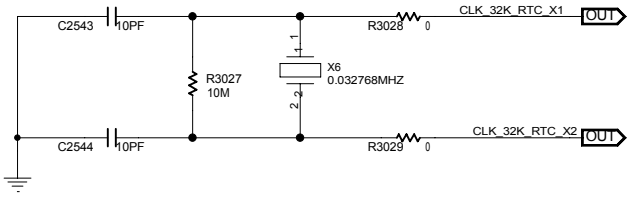

RTC LDO1.5V

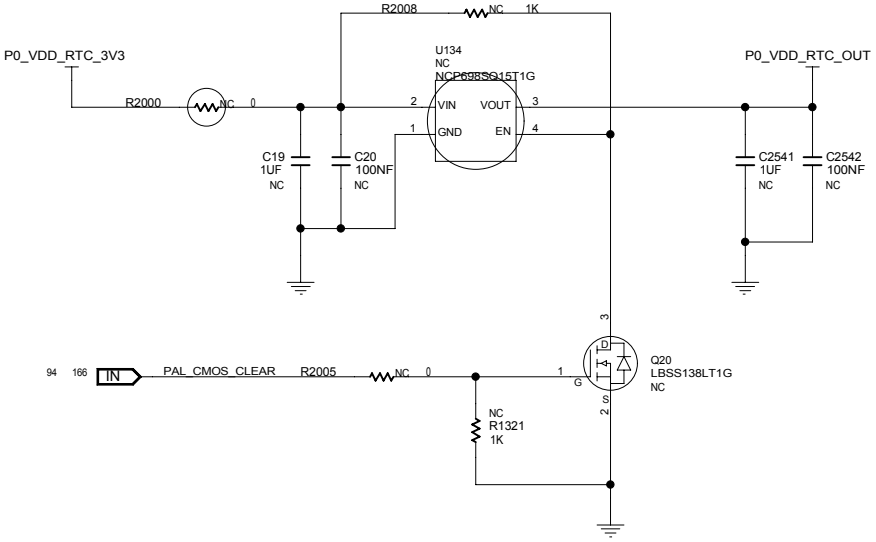

MODULE=---

FUNCTION=---

CNIT TECHNOLOGIES CO.,LTD.				
BOARD NAME BM-H14DSP_VERA			DRAWINGNO CNIT0302K1D0DL	
DESIGNED	ZHUHUI 00746	DATE 2024/10/22	SHEET 95 OF 276	REV
REVIEWED	GUBIN 00260	DATE 2024/11/22	Thu Jan 02 17:51:59 2025	

THIS DOCUMENT AND THE TECHNICAL DATA DISCLOSED ARE PROPRIETARY TO CNIT TECHNOLOGIES CO., LTD. AND SHALL NOT BE DUPLICATED USED RELEASED OR DISCLOSED WITHOUT EXPRESSING WRITTEN PERMISSION.

P0 DIMM I3C

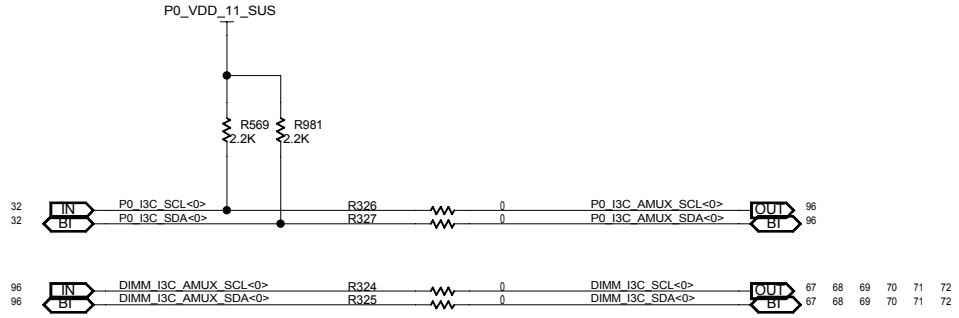

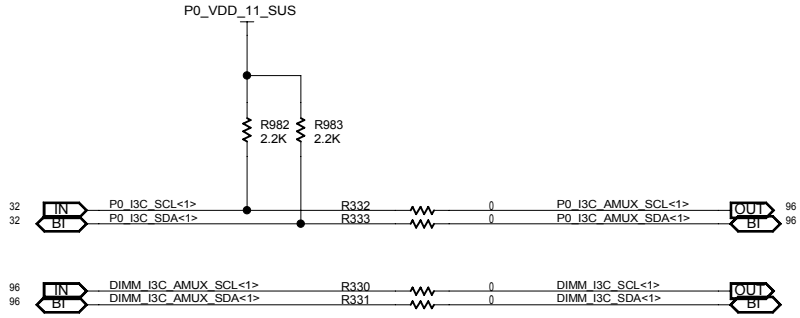

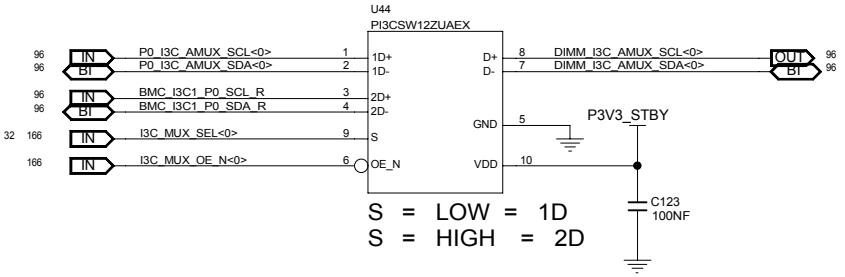

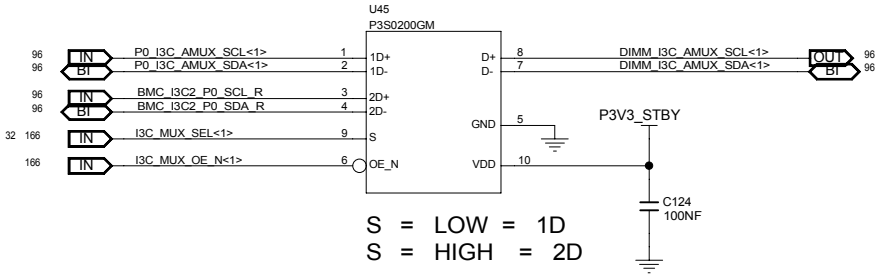

S	OE#	Function
L	L	D=1D
H	L	D=2D
X	H	Disconnect

MODULE=---
FUNCTION=---

CNIT TECHNOLOGIES CO.,LTD.				
BOARD NAME BM-H14DSP_VERA			DRAWINGNO CNIT0302K1D0DL	
DESIGNED	ZHUHUI 00746	DATE 2024/10/22	SHEET 96 OF 276	REV
REVIEWED	GUBIN 00260	DATE 2024/11/22	Sat Jan 04 15:56:09 2025	

THIS DOCUMENT AND THE TECHNICAL DATA DISCLOSED ARE PROPRIETARY TO CNIT TECHNOLOGIES CO., LTD. AND SHALL NOT BE DUPLICATED USED RELEASED OR DISCLOSED WITHOUT EXPRESSING WRITTEN PERMISSION.

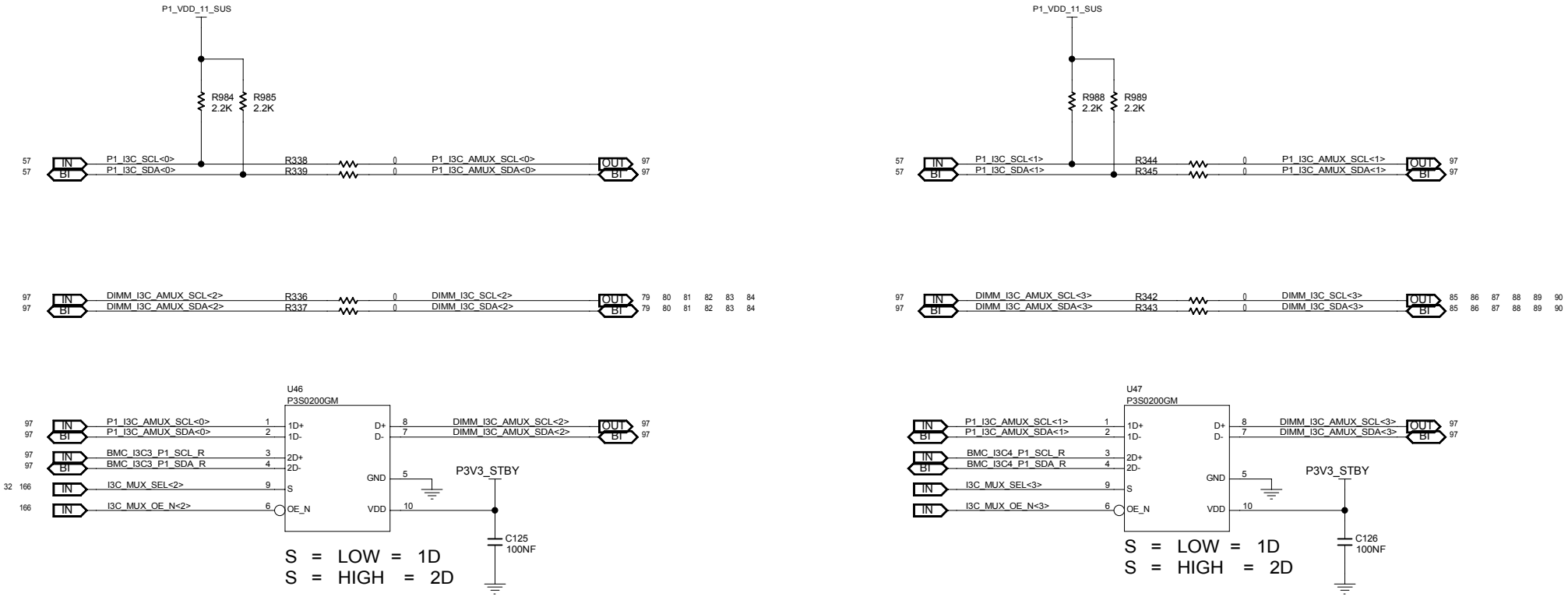

S	OE#	Function
L	L	D=1D
H	L	D=2D
X	H	Disconnect

MODULE=---

FUNCTION=---

CNIT TECHNOLOGIES CO.,LTD.				
BOARD NAME BM-H14DSP_VERA			DRAWINGNO CNIT0302K1D0DL	
DESIGNED	ZHUHUI 00746	DATE 2024/10/22	SHEET 97 OF 276	REV
REVIEWED	GUBIN 00260	DATE 2024/11/22	Sat Jan 04 15:58:37 2025	

THIS DOCUMENT AND THE TECHNICAL DATA DISCLOSED ARE PROPRIETARY TO CNIT TECHNOLOGIES CO., LTD. AND SHALL NOT BE DUPLICATED USED RELEASED OR DISCLOSED WITHOUT EXPRESSING WRITTEN PERMISSION.

I3C5 MUX

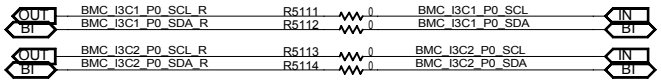

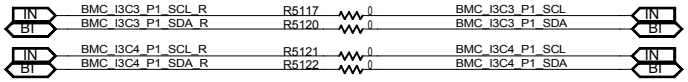

MODULE=---

FUNCTION=---

CNIT TECHNOLOGIES CO.,LTD.				
BOARD NAME BM-H14DSP_VERA			DRAWINGNO CNIT0302K1D0DL	
DESIGNED	ZHUHUI 00746	DATE 2024/10/22	SHEET 98 OF 276	REV
REVIEWED	GUBIN 00260	DATE 2024/11/22	Sat Jan 04 15:58:42 2025	

THIS DOCUMENT AND THE TECHNICAL DATA DISCLOSED ARE PROPRIETARY TO CNIT TECHNOLOGIES CO., LTD. AND SHALL NOT BE DUPLICATED USED RELEASED OR DISCLOSED WITHOUT EXPRESSING WRITTEN PERMISSION.

S	OE#	Function
L	L	D=1D
H	L	D=2D
X	H	Disconnect

MODULE=---
FUNCTION=---

CNIT TECHNOLOGIES CO.,LTD.

BOARD NAME	BM-H14DSP_VERA		DRAWINGNO	CNIT0302K1D0DL
DESIGNED	ZHUHUI 00746	DATE 2024/10/22	SHEET 99 OF 276	REV
REVIEWED	GUBIN 00260	DATE 2024/11/22	Mon Nov 18 17:30:40 2024	

THIS DOCUMENT AND THE TECHNICAL DATA DISCLOSED ARE PROPRIETARY TO CNIT TECHNOLOGIES CO., LTD. AND SHALL NOT BE DUPLICATED USED RELEASED OR DISCLOSED WITHOUT EXPRESSING WRITTEN PERMISSION.

I3C6 MUX

BMC I3C TO J22

S	OE#	Function
L	L	D=1D
H	L	D=2D
X	H	Disconnect

MODULE=---
FUNCTION=---

CNIT TECHNOLOGIES CO.,LTD.				
BOARD NAME BM-H14DSP_VERA			DRAWINGNO CNIT0302K1D0DL	
DESIGNED	ZHUHUI 00746	DATE 2024/10/22	SHEET 100 OF 276	REV
REVIEWED	GUBIN 00260	DATE 2024/11/22	Sun Oct 20 18:07:47 2024	

THIS DOCUMENT AND THE TECHNICAL DATA DISCLOSED ARE PROPRIETARY TO CNIT TECHNOLOGIES CO., LTD. AND SHALL NOT BE DUPLICATED USED RELEASED OR DISCLOSED WITHOUT EXPRESSING WRITTEN PERMISSION.

MODULE=---
FUNCTION=---

CNIT TECHNOLOGIES CO.,LTD.				
BOARD NAME BM-H14DSP_VERA			DRAWINGNO CNIT0302K1D0DL	
DESIGNED	ZHUHUI 00746	DATE 2024/10/22	SHEET 101 OF 276	REV
REVIEWED	GUBIN 00260	DATE 2024/11/22	Thu Oct 17 16:23:36 2024	

THIS DOCUMENT AND THE TECHNICAL DATA DISCLOSED ARE PROPRIETARY TO CNIT TECHNOLOGIES CO., LTD. AND SHALL NOT BE DUPLICATED USED RELEASED OR DISCLOSED WITHOUT EXPRESSING WRITTEN PERMISSION.

CPU APML/SEC

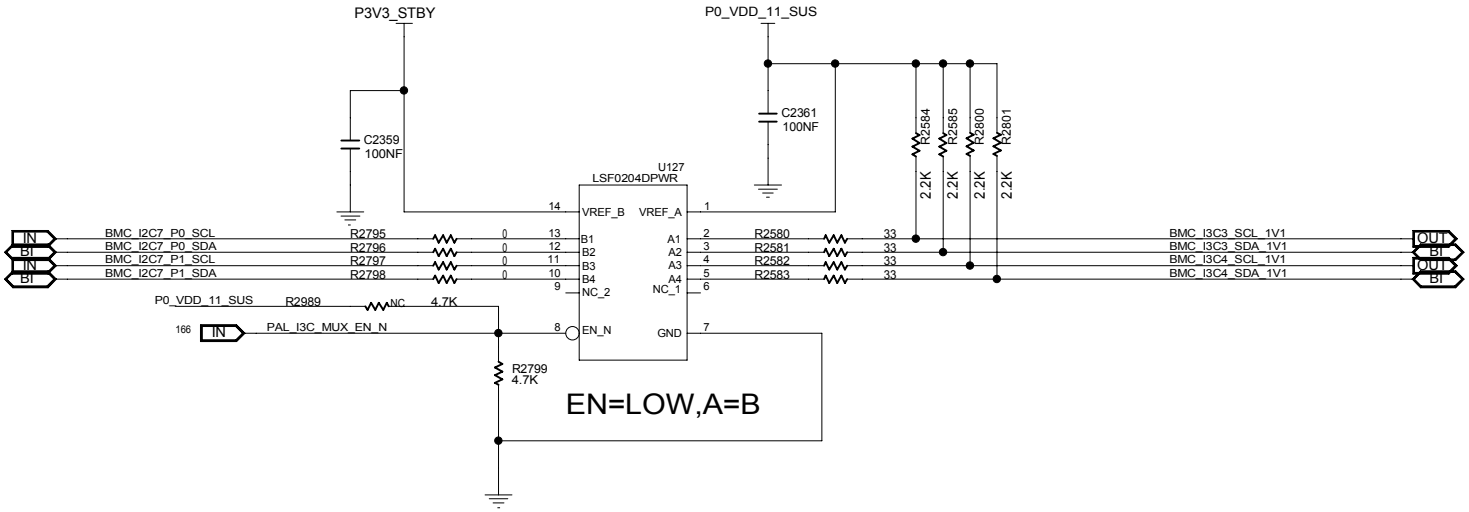

OE_N	Function
H	Hi-z
L	An=Bn

MODULE=---
FUNCTION=---

CNIT TECHNOLOGIES CO.,LTD.				
BOARD NAME BM-H14DSP_VERA			DRAWINGNO CNIT0302K1D0DL	
DESIGNED	ZHUHUI 00746	DATE 2024/10/22	SHEET 102 OF 276	REV
REVIEWED	GUBIN 00260	DATE 2024/11/22	Sat Jan 04 16:10:42 2025	

THIS DOCUMENT AND THE TECHNICAL DATA DISCLOSED ARE PROPRIETARY TO CNIT TECHNOLOGIES CO., LTD. AND SHALL NOT BE DUPLICATED USED RELEASED OR DISCLOSED WITHOUT EXPRESSING WRITTEN PERMISSION.

EVT VC CHANGE BY W00209,CHANGE APML&SEC TOPOLOGY

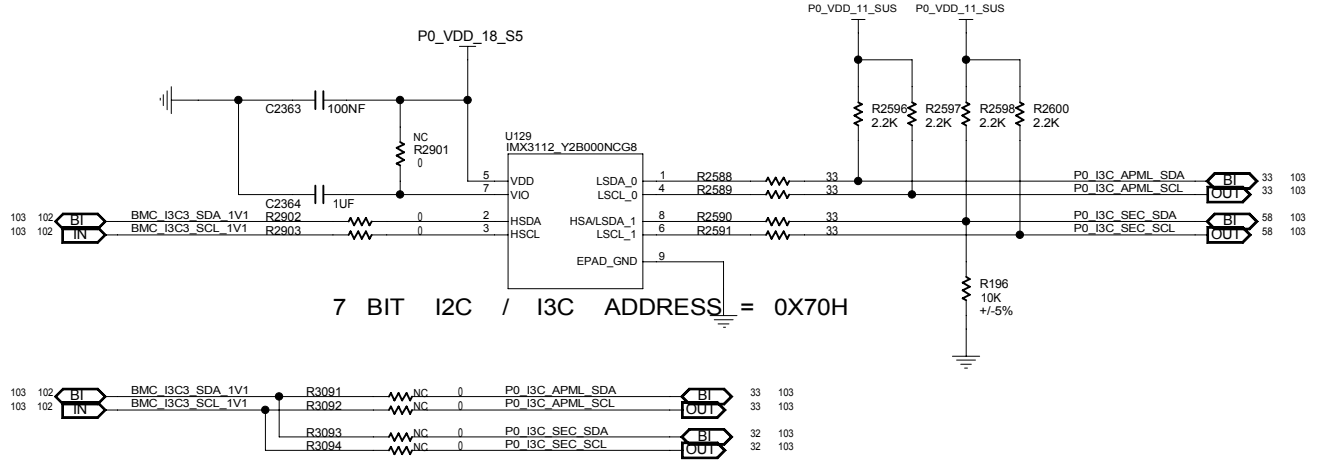

7 BIT I2C / I3C ADDRESS = 0X70H

TO CPU0

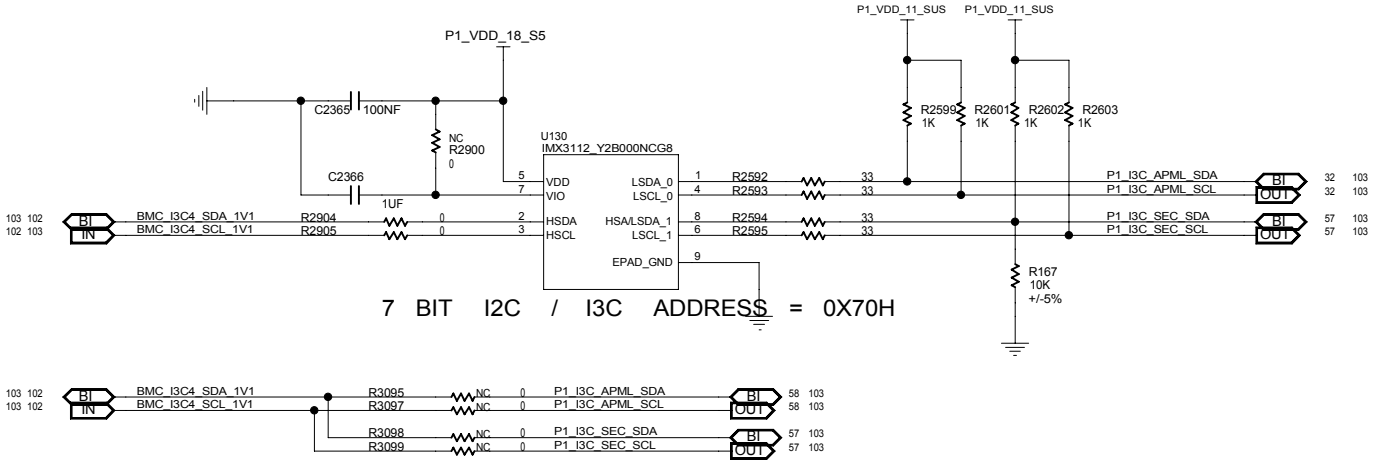

7 BIT I2C / I3C ADDRESS = 0X70H

TO CPU1

MODULE=---

FUNCTION=---

CNIT TECHNOLOGIES CO.,LTD.				
BOARD NAME BM-H14DSP_VERA			DRAWINGNO CNIT0302K1D0DL	
DESIGNED	ZHUHUI 00746	DATE 2024/10/22	SHEET 103 OF 276	REV
REVIEWED	GUBIN 00260	DATE 2024/11/22	Fri Dec 27 16:31:06 2024	

THIS DOCUMENT AND THE TECHNICAL DATA DISCLOSED ARE PROPRIETARY TO CNIT TECHNOLOGIES CO., LTD. AND SHALL NOT BE DUPLICATED USED RELEASED OR DISCLOSED WITHOUT EXPRESSING WRITTEN PERMISSION.

I2C5

MODULE=---
FUNCTION=---

CNIT TECHNOLOGIES CO.,LTD.				
BOARD NAME BM-H14DSP_VERA			DRAWINGNO CNIT0302K1D0DL	
DESIGNED	ZHUHUI 00746	DATE 2024/10/22	SHEET 104 OF 276	REV
REVIEWED	GUBIN 00260	DATE 2024/11/22	Tue Oct 29 16:28:04 2024	

THIS DOCUMENT AND THE TECHNICAL DATA DISCLOSED ARE PROPRIETARY TO CNIT TECHNOLOGIES CO., LTD. AND SHALL NOT BE DUPLICATED USED RELEASED OR DISCLOSED WITHOUT EXPRESSING WRITTEN PERMISSION.

I2C1

BMC I2C1

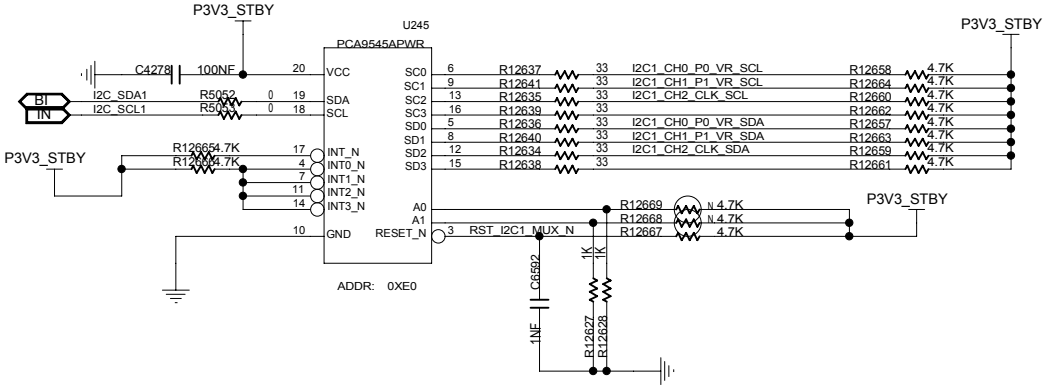

MODULE=---

FUNCTION=---

CNIT TECHNOLOGIES CO.,LTD.				
BOARD NAME BM-H14DSP_VERA			DRAWINGNO CNIT0302K1D0DL	
DESIGNED	ZHUHUI 00746	DATE 2024/10/22	SHEET 105 OF 276	REV
REVIEWED	GUBIN 00260	DATE 2024/11/22	Mon Jan 06 14:35:35 2025	

THIS DOCUMENT AND THE TECHNICAL DATA DISCLOSED ARE PROPRIETARY TO CNIT TECHNOLOGIES CO., LTD. AND SHALL NOT BE DUPLICATED USED RELEASED OR DISCLOSED WITHOUT EXPRESSING WRITTEN PERMISSION.

I2C7

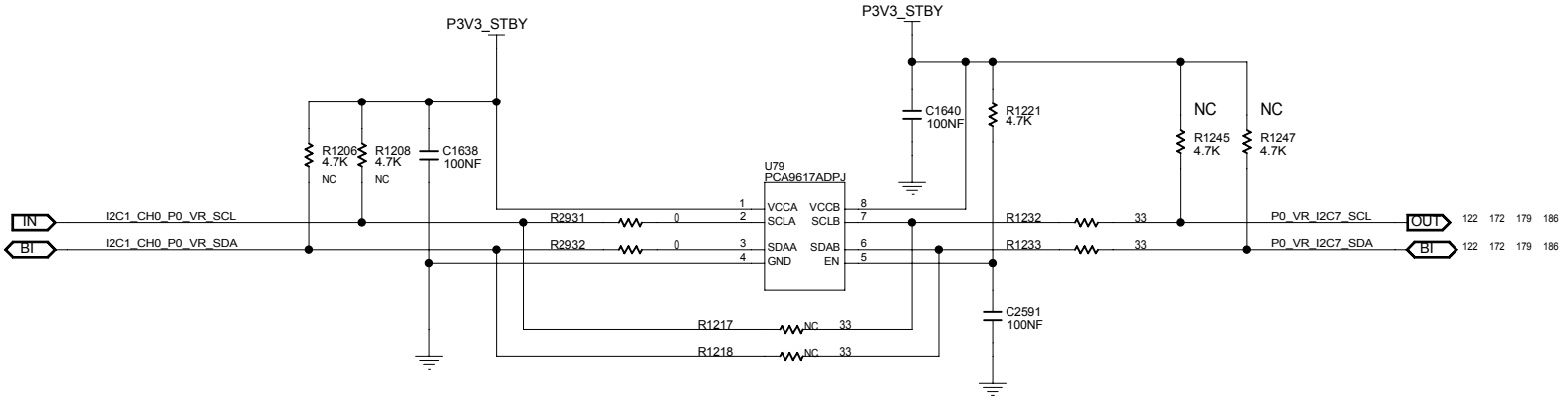

TO P0 VR

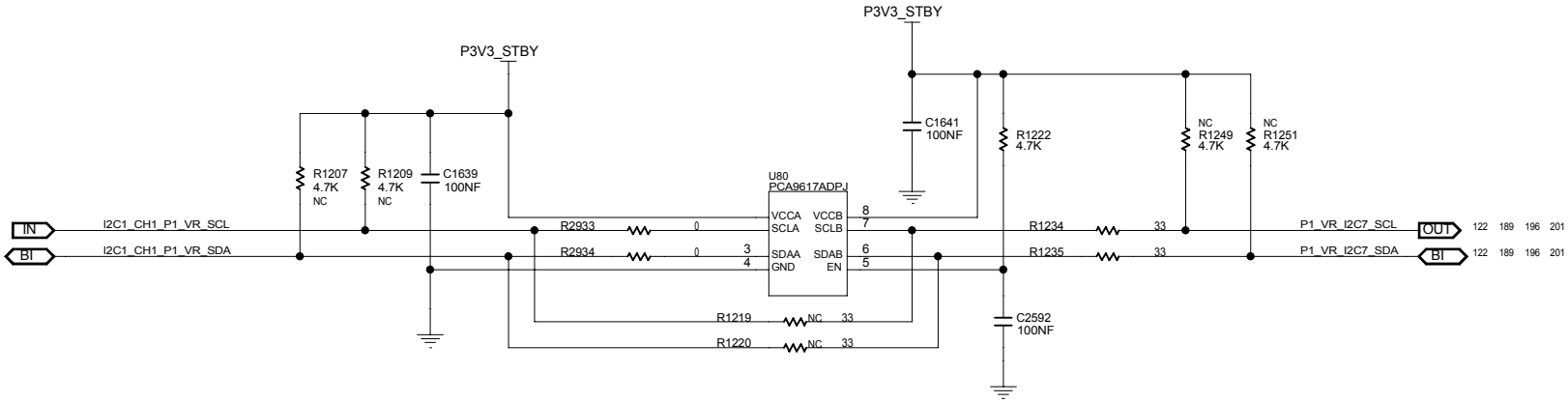

TO P1 VR

MODULE=---
FUNCTION=---

CNIT TECHNOLOGIES CO.,LTD.				
BOARD NAME BM-H14DSP_VERA			DRAWINGNO CNIT0302K1D0DL	
DESIGNED	ZHUHUI 00746	DATE 2024/10/22	SHEET 106 OF 276	REV
REVIEWED	GUBIN 00260	DATE 2024/11/22	Thu Jan 02 17:07:33 2025	

THIS DOCUMENT AND THE TECHNICAL DATA DISCLOSED ARE PROPRIETARY TO CNIT TECHNOLOGIES CO., LTD. AND SHALL NOT BE DUPLICATED USED RELEASED OR DISCLOSED WITHOUT EXPRESSING WRITTEN PERMISSION.

I2C2

MODULE=---
FUNCTION=---

CNIT TECHNOLOGIES CO.,LTD.				
BOARD NAME BM-H14DSP_VERA			DRAWINGNO CNIT0302K1D0DL	
DESIGNED	ZHUHUI 00746	DATE 2024/10/22	SHEET 107 OF 276	REV
REVIEWED	GUBIN 00260	DATE 2024/11/22	Mon Nov 18 20:27:50 2024	

THIS DOCUMENT AND THE TECHNICAL DATA DISCLOSED ARE PROPRIETARY TO CNIT TECHNOLOGIES CO., LTD. AND SHALL NOT BE DUPLICATED USED RELEASED OR DISCLOSED WITHOUT EXPRESSING WRITTEN PERMISSION.

BMC I2C4

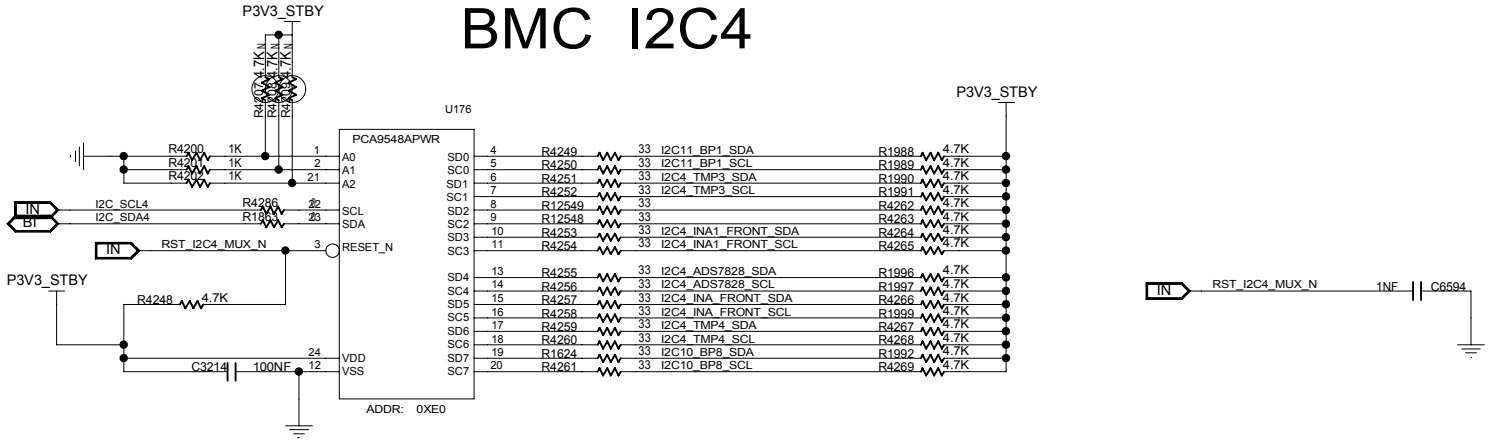

BMC I2C7

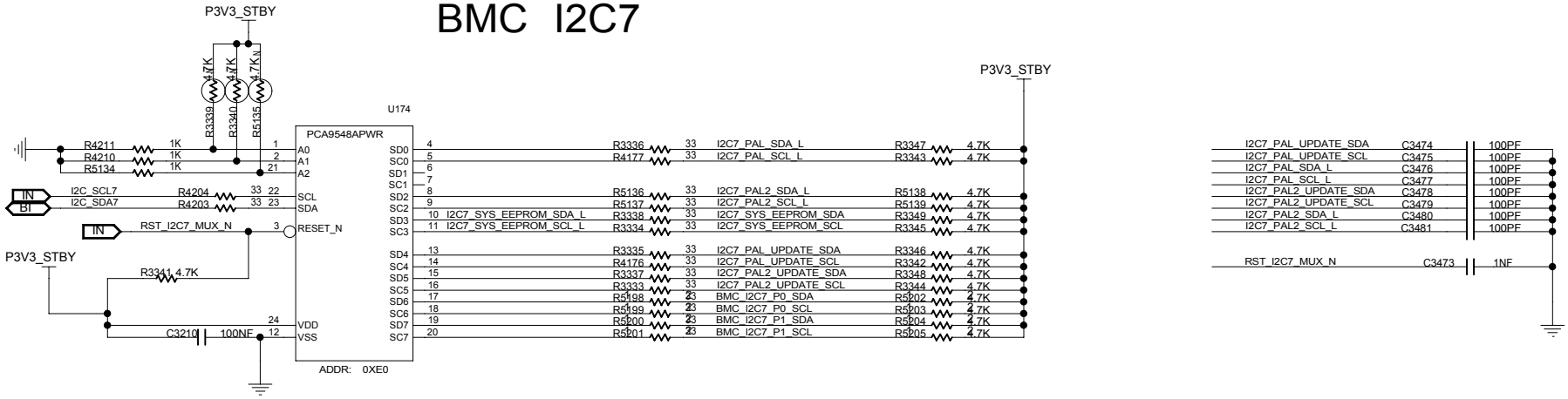

MODULE=---
FUNCTION=---

CNIT TECHNOLOGIES CO.,LTD.				
BOARD NAME BM-H14DSP_VERA			DRAWINGNO CNIT0302K1D0DL	
DESIGNED	ZHUHUI 00746	DATE 2024/10/22	SHEET 108 OF 276	REV
REVIEWED	GUBIN 00260	DATE 2024/11/22	Mon Jan 06 21:04:35 2025	

THIS DOCUMENT AND THE TECHNICAL DATA DISCLOSED ARE PROPRIETARY TO CNIT TECHNOLOGIES CO., LTD. AND SHALL NOT BE DUPLICATED USED RELEASED OR DISCLOSED WITHOUT EXPRESSING WRITTEN PERMISSION.

I2C11/14

BMC I2C11

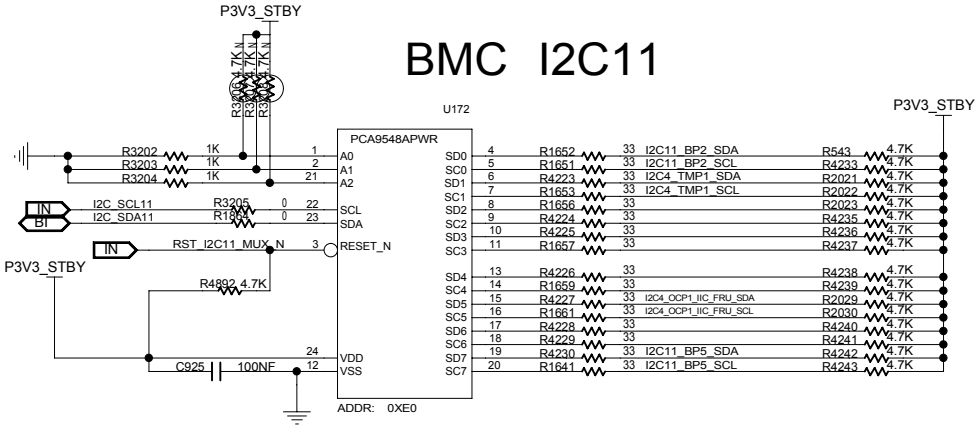

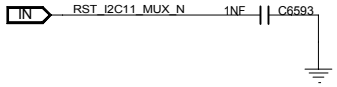

BMC I2C10

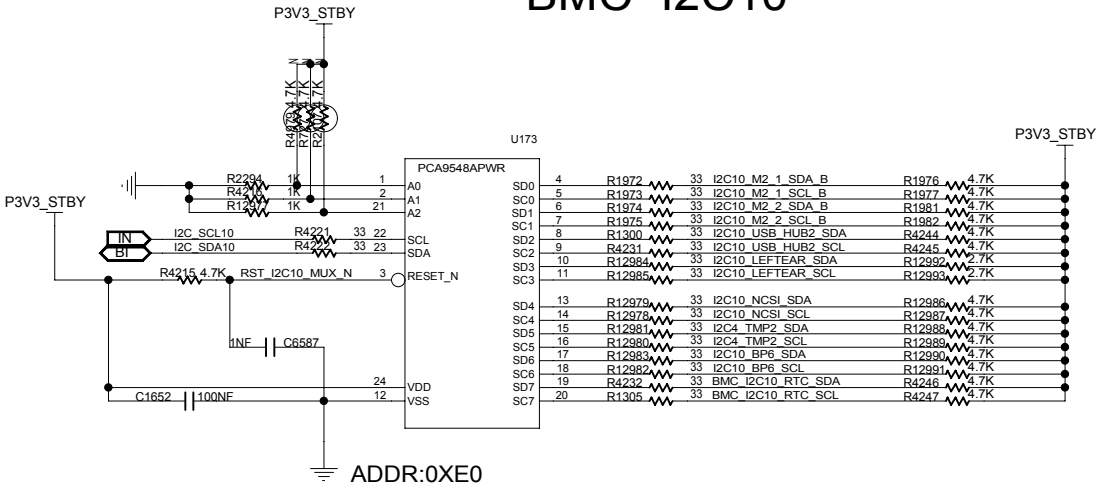

MODULE=---

FUNCTION=---

CNIT TECHNOLOGIES CO.,LTD.				
BOARD NAME BM-H14DSP_VERA			DRAWINGNO CNIT0302K1D0DL	
DESIGNED	ZHUHUI 00746	DATE 2024/10/22	SHEET 109 OF 276	REV
REVIEWED	GUBIN 00260	DATE 2024/11/22	Thu Jan 02 17:07:06 2025	

THIS DOCUMENT AND THE TECHNICAL DATA DISCLOSED ARE PROPRIETARY TO CNIT TECHNOLOGIES CO., LTD. AND SHALL NOT BE DUPLICATED USED RELEASED OR DISCLOSED WITHOUT EXPRESSING WRITTEN PERMISSION.

I2C9

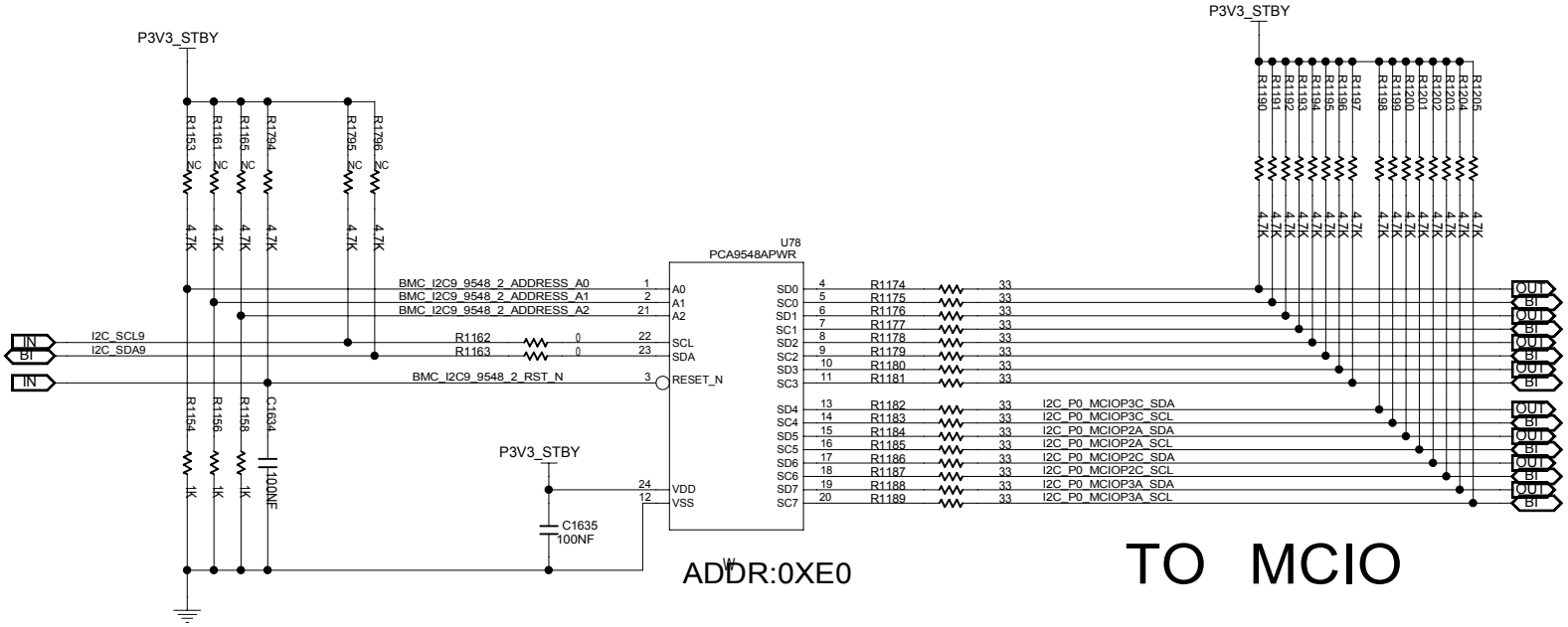

ADDR:0XE0

TO MCIO

MODULE=---

FUNCTION=---

CNIT TECHNOLOGIES CO.,LTD.				
BOARD NAME BM-H14DSP_VERA			DRAWINGNO CNIT0302K1D0DL	
DESIGNED	ZHUHUI 00746	DATE 2024/10/22	SHEET 110 OF 276	REV
REVIEWED	GUBIN 00260	DATE 2024/11/22	Thu Jan 02 17:07:11 2025	

THIS DOCUMENT AND THE TECHNICAL DATA DISCLOSED ARE PROPRIETARY TO CNIT TECHNOLOGIES CO., LTD. AND SHALL NOT BE DUPLICATED USED RELEASED OR DISCLOSED WITHOUT EXPRESSING WRITTEN PERMISSION.

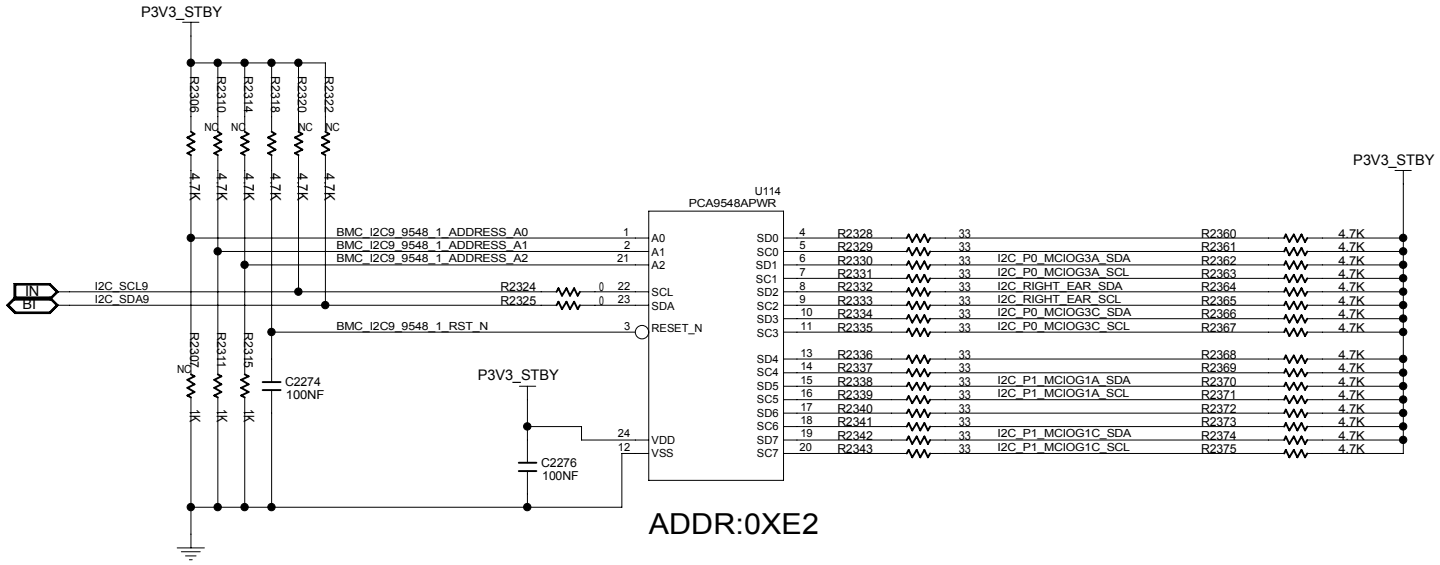

TO MCIO

ADDR:0XE2

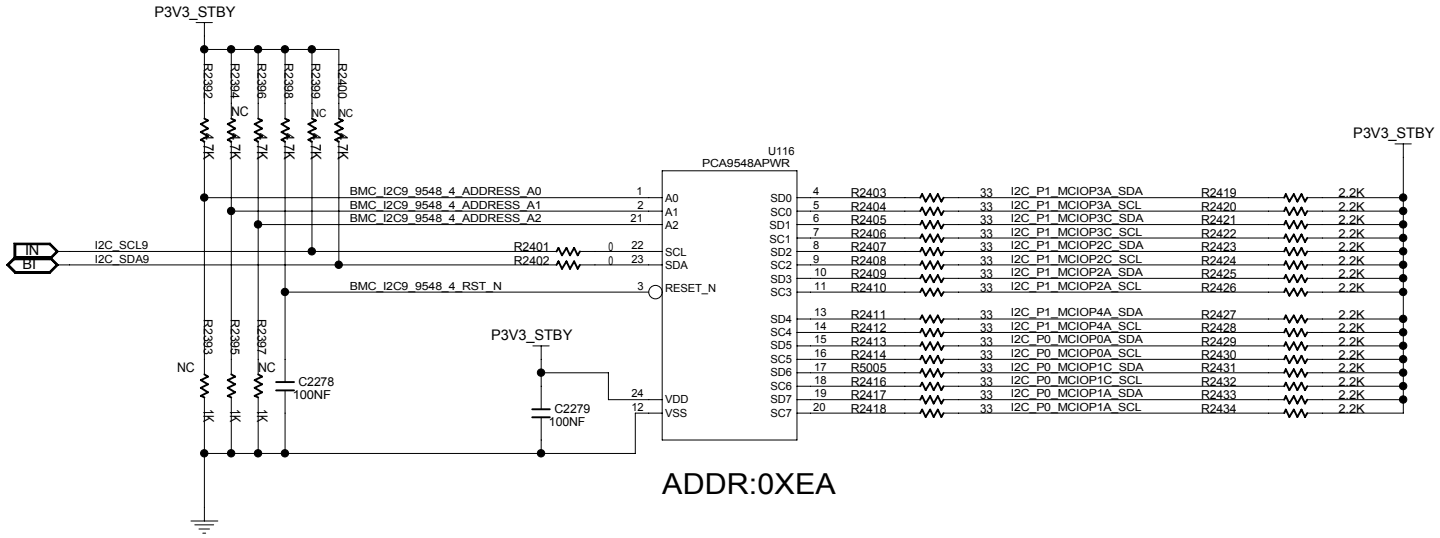

TO MCIO

ADDR:0XEA

MODULE=---

FUNCTION=---

CNIT TECHNOLOGIES CO.,LTD.				
BOARD NAME BM-H14DSP_VERA			DRAWINGNO CNIT0302K1D0DL	
DESIGNED	ZHUHUI 00746	DATE 2024/10/22	SHEET 111 OF 276	REV
REVIEWED	GUBIN 00260	DATE 2024/11/22	Wed Jan 08 16:37:14 2025	

THIS DOCUMENT AND THE TECHNICAL DATA DISCLOSED ARE PROPRIETARY TO CNIT TECHNOLOGIES CO., LTD. AND SHALL NOT BE DUPLICATED USED RELEASED OR DISCLOSED WITHOUT EXPRESSING WRITTEN PERMISSION.

I2C9

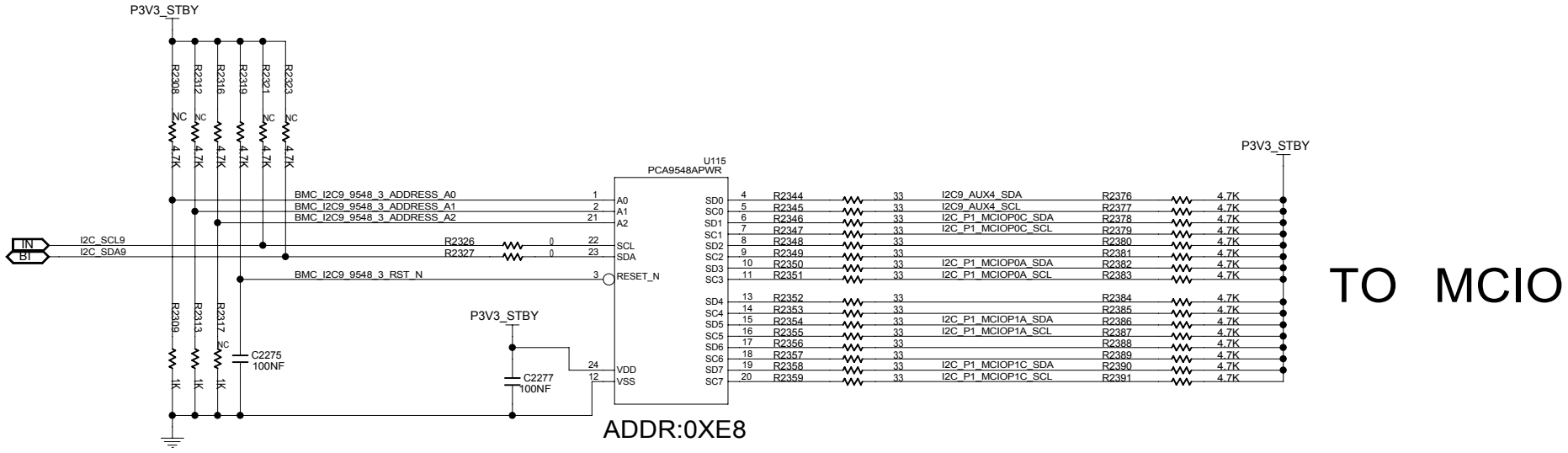

TO MCIO

MODULE=---

FUNCTION=---

CNIT TECHNOLOGIES CO.,LTD.				
BOARD NAME BM-H14DSP_VERA			DRAWINGNO CNIT0302K1D0DL	
DESIGNED	ZHUHUI 00746	DATE 2024/10/22	SHEET 112 OF 276	REV
REVIEWED	GUBIN 00260	DATE 2024/11/22	Thu Jan 02 17:07:22 2025	

THIS DOCUMENT AND THE TECHNICAL DATA DISCLOSED ARE PROPRIETARY TO CNIT TECHNOLOGIES CO., LTD. AND SHALL NOT BE DUPLICATED USED RELEASED OR DISCLOSED WITHOUT EXPRESSING WRITTEN PERMISSION.

I2C7

MODULE=---
FUNCTION=---

CNIT TECHNOLOGIES CO.,LTD.				
BOARD NAME BM-H14DSP_VERA			DRAWINGNO CNIT0302K1D0DL	
DESIGNED	ZHUHUI 00746	DATE 2024/10/22	SHEET 113 OF 276	REV
REVIEWED	GUBIN 00260	DATE 2024/11/22	Tue Oct 29 14:49:04 2024	

THIS DOCUMENT AND THE TECHNICAL DATA DISCLOSED ARE PROPRIETARY TO CNIT TECHNOLOGIES CO., LTD. AND SHALL NOT BE DUPLICATED USED RELEASED OR DISCLOSED WITHOUT EXPRESSING WRITTEN PERMISSION.

I2C7

MODULE=---
FUNCTION=---

CNIT TECHNOLOGIES CO.,LTD.				
BOARD NAME BM-H14DSP_VERA			DRAWINGNO CNIT0302K1D0DL	
DESIGNED	ZHUHUI 00746	DATE 2024/10/22	SHEET 114 OF 276	REV
REVIEWED	GUBIN 00260	DATE 2024/11/22	Tue Oct 29 15:03:15 2024	

THIS DOCUMENT AND THE TECHNICAL DATA DISCLOSED ARE PROPRIETARY TO CNIT TECHNOLOGIES CO., LTD. AND SHALL NOT BE DUPLICATED USED RELEASED OR DISCLOSED WITHOUT EXPRESSING WRITTEN PERMISSION.

I2C8

DEVICE ADDRESS

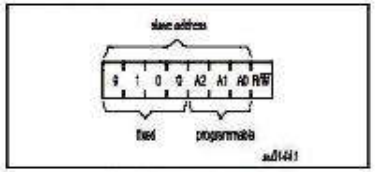

Figure 6. PCA9555 address

MODULE=---
FUNCTION=---

CNIT TECHNOLOGIES CO.,LTD.				
BOARD NAME BM-H14DSP_VERA			DRAWINGNO CNIT0302K1D0DL	
DESIGNED	ZHUHUI 00746	DATE 2024/10/22	SHEET 115 OF 276	REV
REVIEWED	GUBIN 00260	DATE 2024/11/22	Wed Oct 30 16:27:15 2024	

THIS DOCUMENT AND THE TECHNICAL DATA DISCLOSED ARE PROPRIETARY TO CNIT TECHNOLOGIES CO., LTD. AND SHALL NOT BE DUPLICATED USED RELEASED OR DISCLOSED WITHOUT EXPRESSING WRITTEN PERMISSION.

MODULE=---
FUNCTION=---

CNIT TECHNOLOGIES CO.,LTD.				
BOARD NAME BM-H14DSP_VERA			DRAWINGNO CNIT0302K1D0DL	
DESIGNED	ZHUHUI 00746	DATE 2024/10/22	SHEET 116 OF 276	REV
REVIEWED	GUBIN 00260	DATE 2024/11/22	Mon Oct 21 20:40:33 2024	

THIS DOCUMENT AND THE TECHNICAL DATA DISCLOSED ARE PROPRIETARY TO CNIT TECHNOLOGIES CO., LTD. AND SHALL NOT BE DUPLICATED USED RELEASED OR DISCLOSED WITHOUT EXPRESSING WRITTEN PERMISSION.

MODULE=---
FUNCTION=---

CNIT TECHNOLOGIES CO.,LTD.				
BOARD NAME BM-H14DSP_VERA			DRAWINGNO CNIT0302K1D0DL	
DESIGNED	ZHUHUI 00746	DATE 2024/10/22	SHEET 117 OF 276	REV
REVIEWED	GUBIN 00260	DATE 2024/11/22	Wed Oct 30 16:27:02 2024	

THIS DOCUMENT AND THE TECHNICAL DATA DISCLOSED ARE PROPRIETARY TO CNIT TECHNOLOGIES CO., LTD. AND SHALL NOT BE DUPLICATED USED RELEASED OR DISCLOSED WITHOUT EXPRESSING WRITTEN PERMISSION.

CPU0 I2C4 VPP

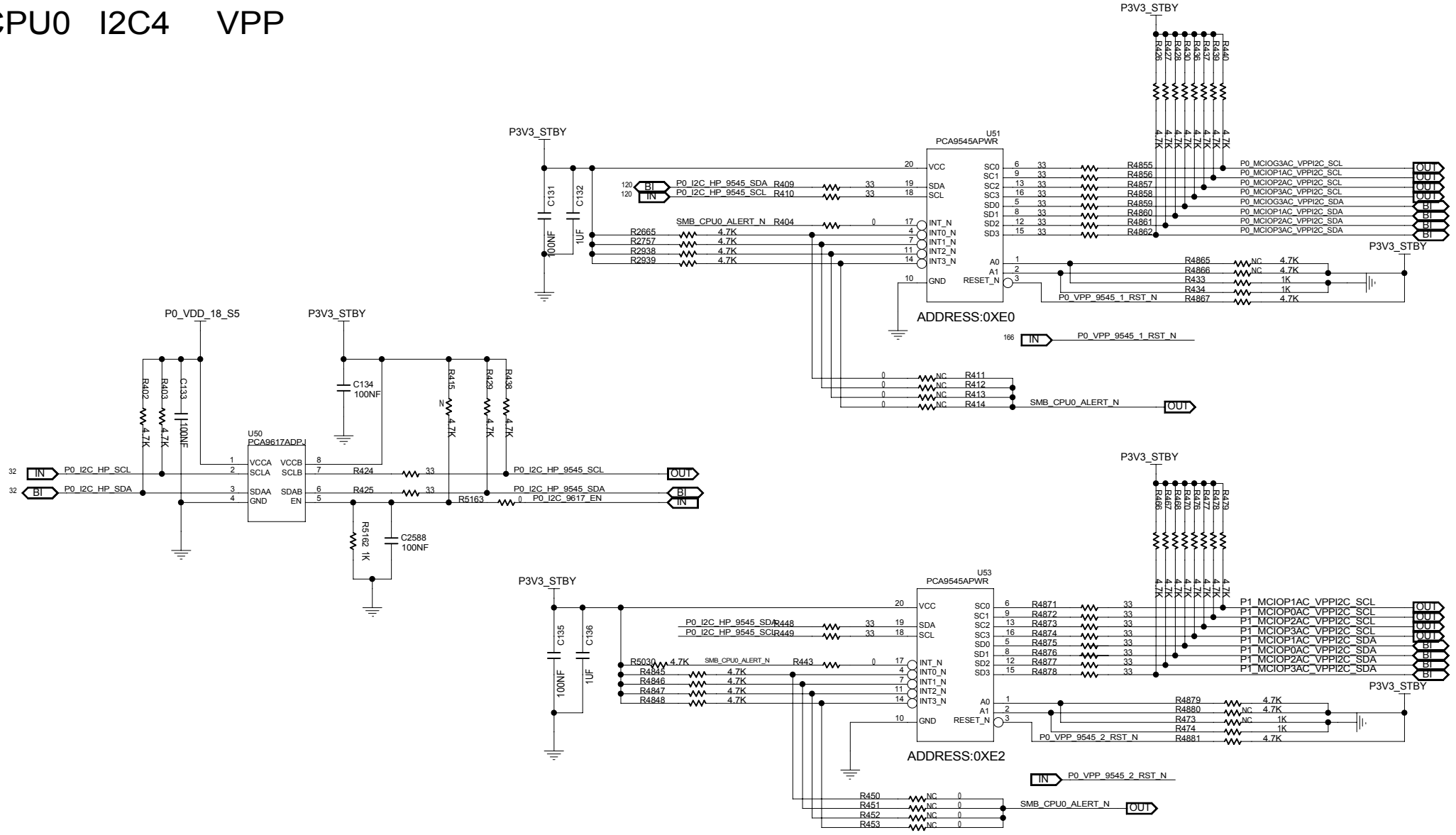

MODULE=---

FUNCTION=---

CNIT TECHNOLOGIES CO.,LTD.				
BOARD NAME BM-H14DSP_VERA			DRAWINGNO CNIT0302K1D0DL	
DESIGNED	ZHUHUI 00746	DATE 2024/10/22	SHEET 118 OF 276	REV
REVIEWED	GUBIN 00260	DATE 2024/11/22	Fri Dec 27 16:50:39 2024	

THIS DOCUMENT AND THE TECHNICAL DATA DISCLOSED ARE PROPRIETARY TO CNIT TECHNOLOGIES CO., LTD. AND SHALL NOT BE DUPLICATED USED RELEASED OR DISCLOSED WITHOUT EXPRESSING WRITTEN PERMISSION.

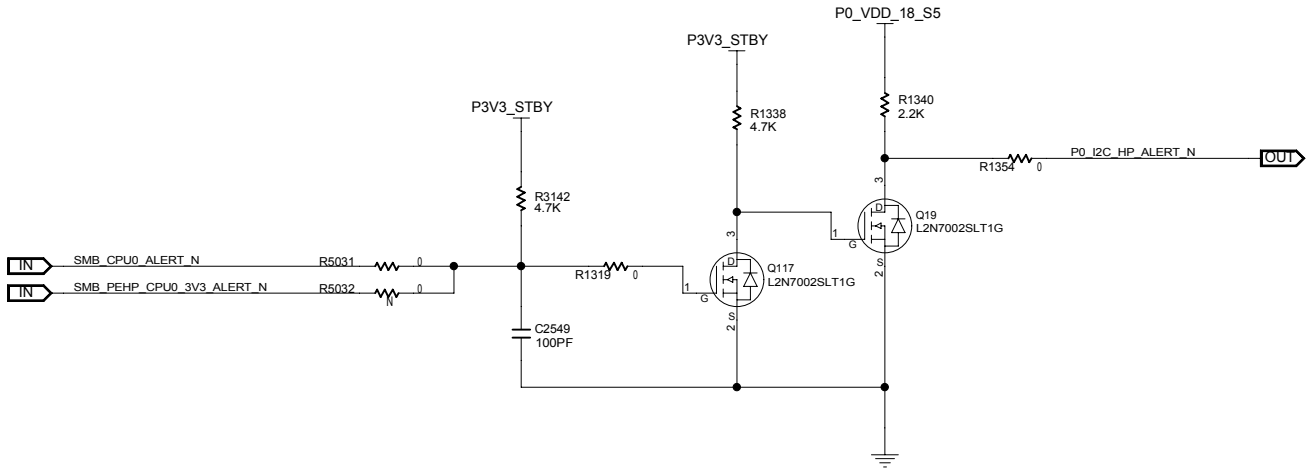

MODULE=---
FUNCTION=---

CNIT TECHNOLOGIES CO.,LTD.				
BOARD NAME BM-H14DSP_VERA			DRAWINGNO CNIT0302K1D0DL	
DESIGNED	ZHUHUI 00746	DATE 2024/10/22	SHEET 119 OF 276	REV
REVIEWED	GUBIN 00260	DATE 2024/11/22	Thu Jan 02 17:52:15 2025	

THIS DOCUMENT AND THE TECHNICAL DATA DISCLOSED ARE PROPRIETARY TO CNIT TECHNOLOGIES CO., LTD. AND SHALL NOT BE DUPLICATED USED RELEASED OR DISCLOSED WITHOUT EXPRESSING WRITTEN PERMISSION.

CPU0 I2C5

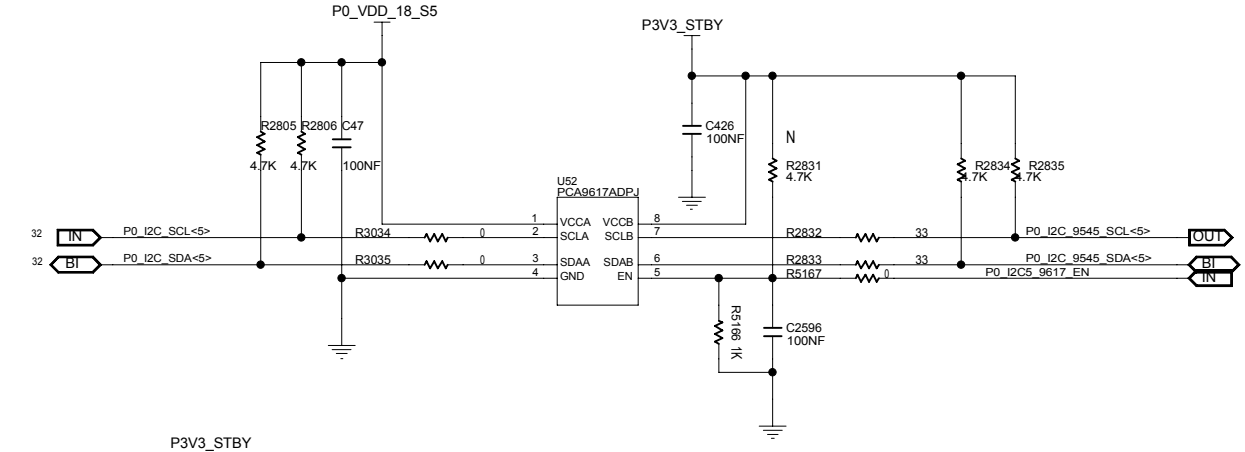

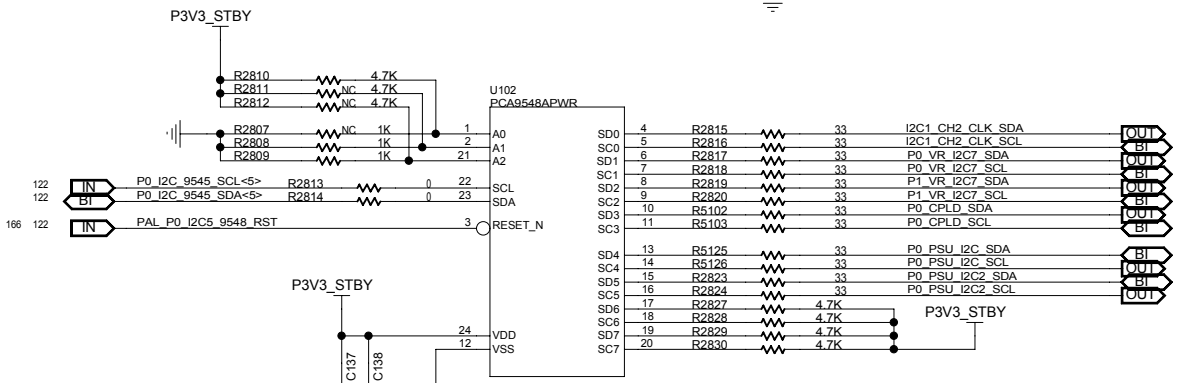

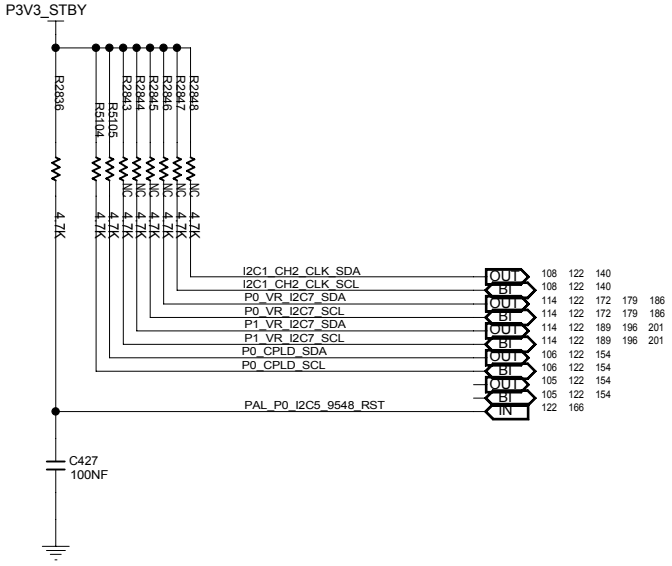

Slave Address

1	1	1	0	A2	A1	A0	R/W

MODULE=---

FUNCTION=---

CNIT TECHNOLOGIES CO.,LTD.				
BOARD NAME BM-H14DSP_VERA			DRAWINGNO CNIT0302K1D0DL	
DESIGNED	ZHUHUI 00746	DATE 2024/10/22	SHEET 120 OF 276	REV
REVIEWED	GUBIN 00260	DATE 2024/11/22	Fri Dec 27 16:50:34 2024	

THIS DOCUMENT AND THE TECHNICAL DATA DISCLOSED ARE PROPRIETARY TO CNIT TECHNOLOGIES CO., LTD. AND SHALL NOT BE DUPLICATED USED RELEASED OR DISCLOSED WITHOUT EXPRESSING WRITTEN PERMISSION.

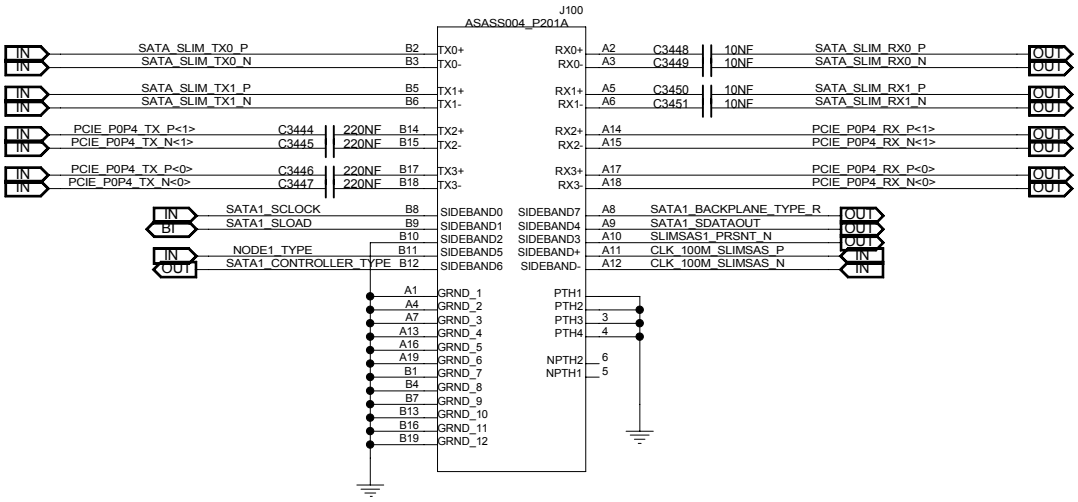

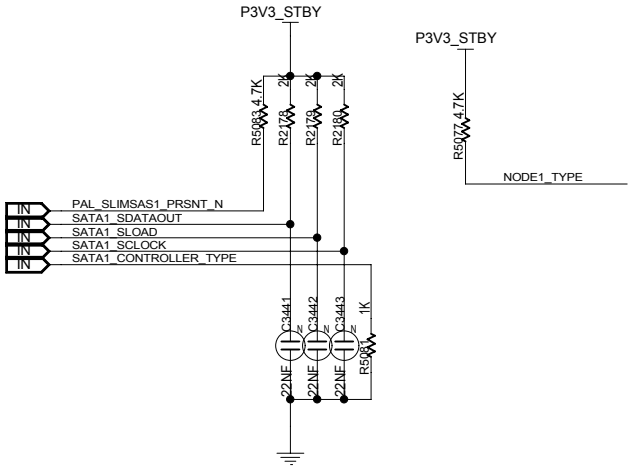

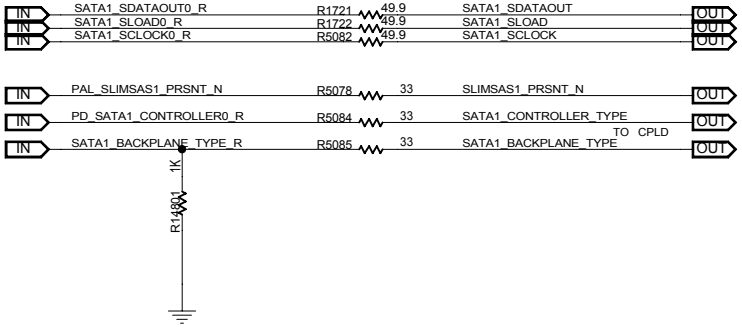

MODULE=---

FUNCTION=---

CNIT TECHNOLOGIES CO.,LTD.				
BOARD NAME BM-H14DSP_VERA			DRAWINGNO CNIT0302K1D0DL	
DESIGNED	ZHUHUI 00746	DATE 2024/10/22	SHEET 121 OF 276	REV
REVIEWED	GUBIN 00260	DATE 2024/11/22	Tue Jan 07 11:17:23 2025	

THIS DOCUMENT AND THE TECHNICAL DATA DISCLOSED ARE PROPRIETARY TO CNIT TECHNOLOGIES CO., LTD. AND SHALL NOT BE DUPLICATED USED RELEASED OR DISCLOSED WITHOUT EXPRESSING WRITTEN PERMISSION.

MODULE=---
FUNCTION=---

CNIT TECHNOLOGIES CO.,LTD.				
BOARD NAME BM-H14DSP_VERA			DRAWINGNO CNIT0302K1D0DL	
DESIGNED	ZHUHUI 00746	DATE 2024/10/22	SHEET 122 OF 276	REV
REVIEWED	GUBIN 00260	DATE 2024/11/22	Mon Nov 11 20:21:58 2024	

THIS DOCUMENT AND THE TECHNICAL DATA DISCLOSED ARE PROPRIETARY TO CNIT TECHNOLOGIES CO., LTD. AND SHALL NOT BE DUPLICATED USED RELEASED OR DISCLOSED WITHOUT EXPRESSING WRITTEN PERMISSION.

MCIO:P0G3

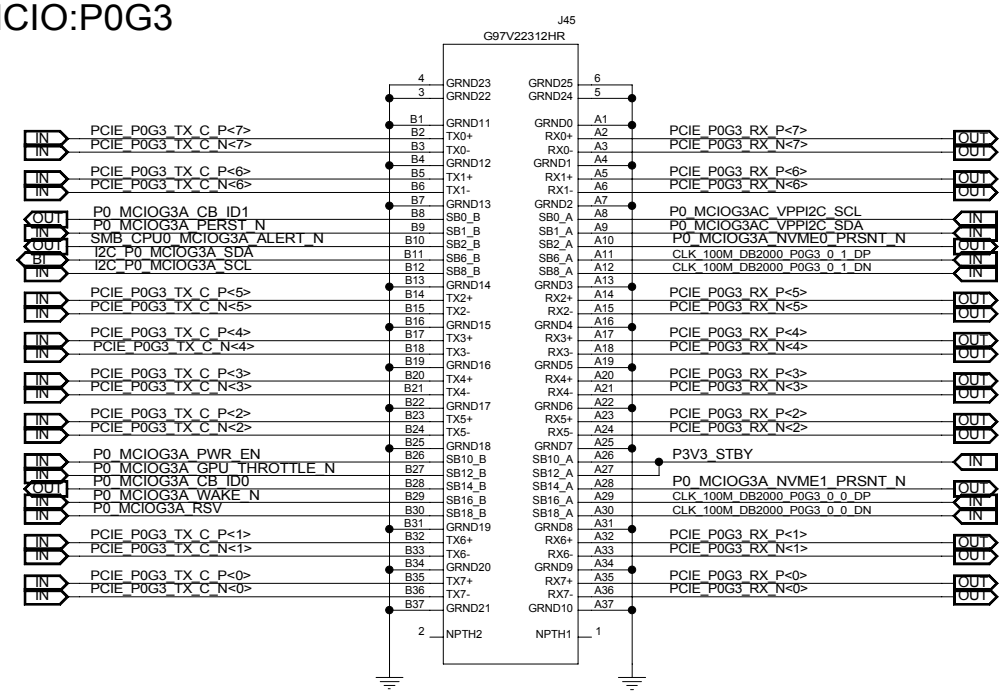

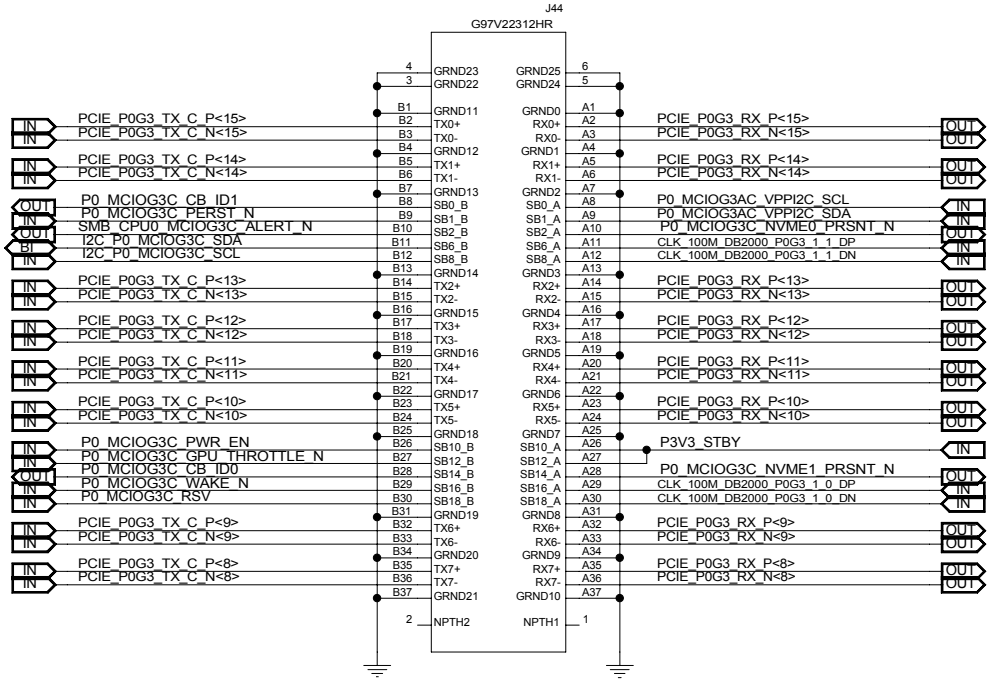

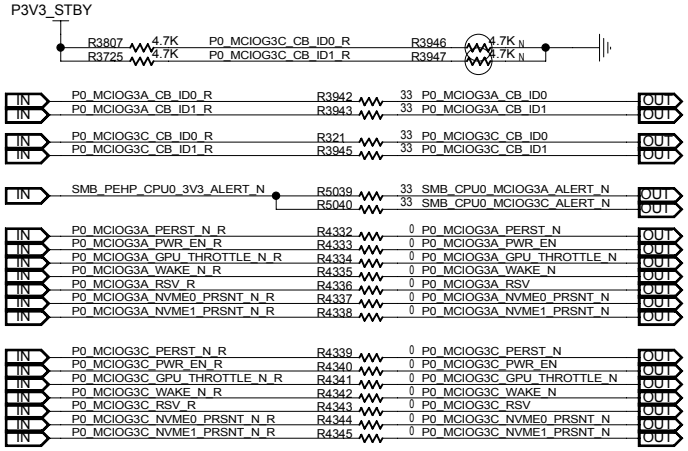

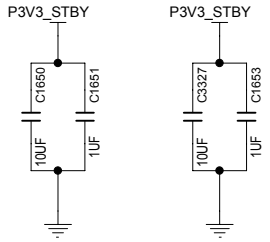

MODULE=---

FUNCTION=---

CNIT TECHNOLOGIES CO.,LTD.				
BOARD NAME BM-H14DSP_VERA			DRAWINGNO CNIT0302K1D0DL	
DESIGNED	ZHUHUI 00746	DATE 2024/10/22	SHEET 123 OF 276	REV
REVIEWED	GUBIN 00260	DATE 2024/11/22	Sun Jan 05 16:01:25 2025	

THIS DOCUMENT AND THE TECHNICAL DATA DISCLOSED ARE PROPRIETARY TO CNIT TECHNOLOGIES CO., LTD. AND SHALL NOT BE DUPLICATED USED RELEASED OR DISCLOSED WITHOUT EXPRESSING WRITTEN PERMISSION.

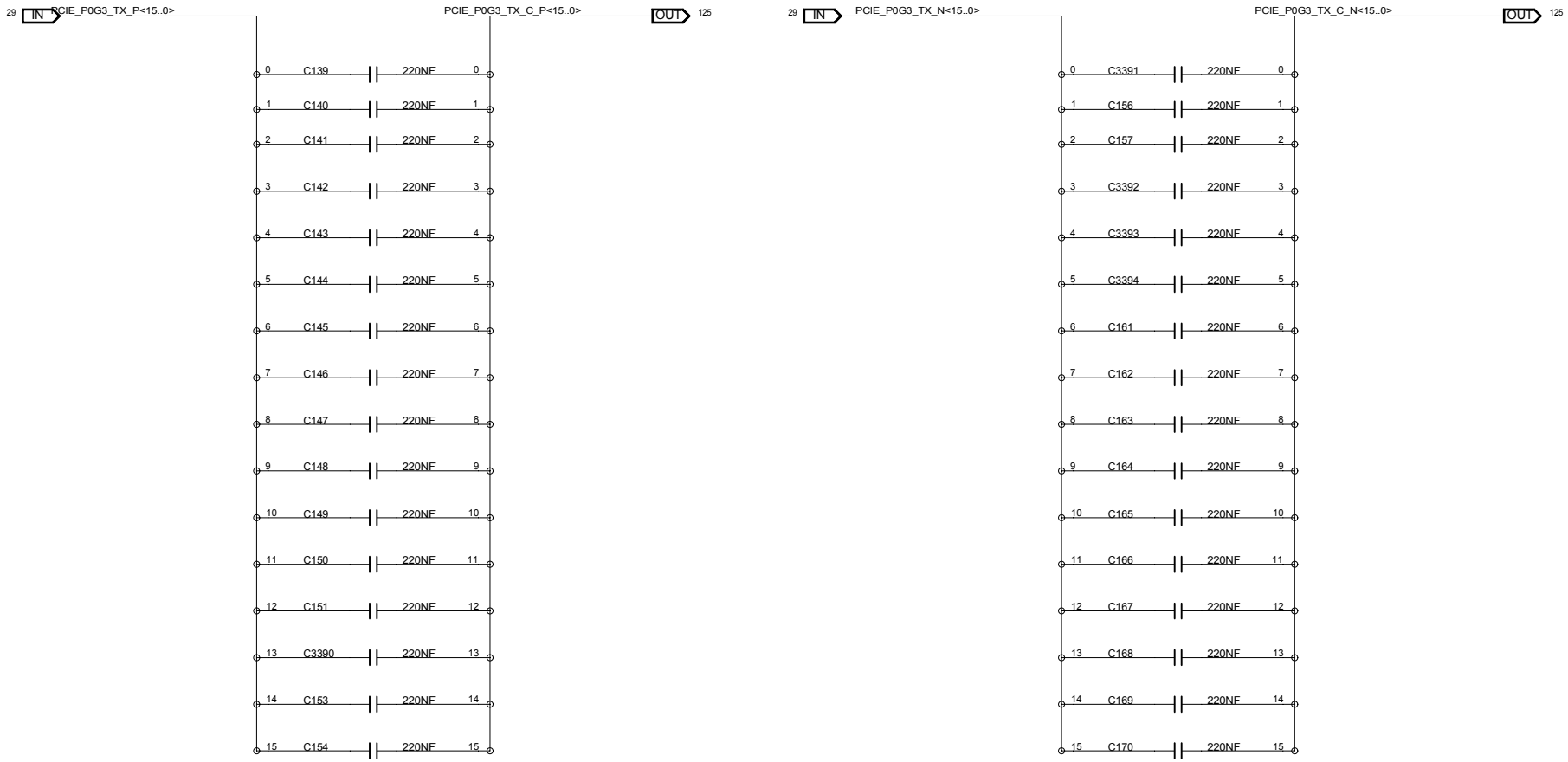

MODULE=---
FUNCTION=---

CNIT TECHNOLOGIES CO.,LTD.				
BOARD NAME BM-H14DSP_VERA			DRAWINGNO CNIT0302K1D0DL	
DESIGNED	ZHUHUI 00746	DATE 2024/10/22	SHEET 124 OF 276	REV
REVIEWED	GUBIN 00260	DATE 2024/11/22	Fri Dec 27 11:46:44 2024	

THIS DOCUMENT AND THE TECHNICAL DATA DISCLOSED ARE PROPRIETARY TO CNIT TECHNOLOGIES CO., LTD. AND SHALL NOT BE DUPLICATED USED RELEASED OR DISCLOSED WITHOUT EXPRESSING WRITTEN PERMISSION.

CPU0_P0

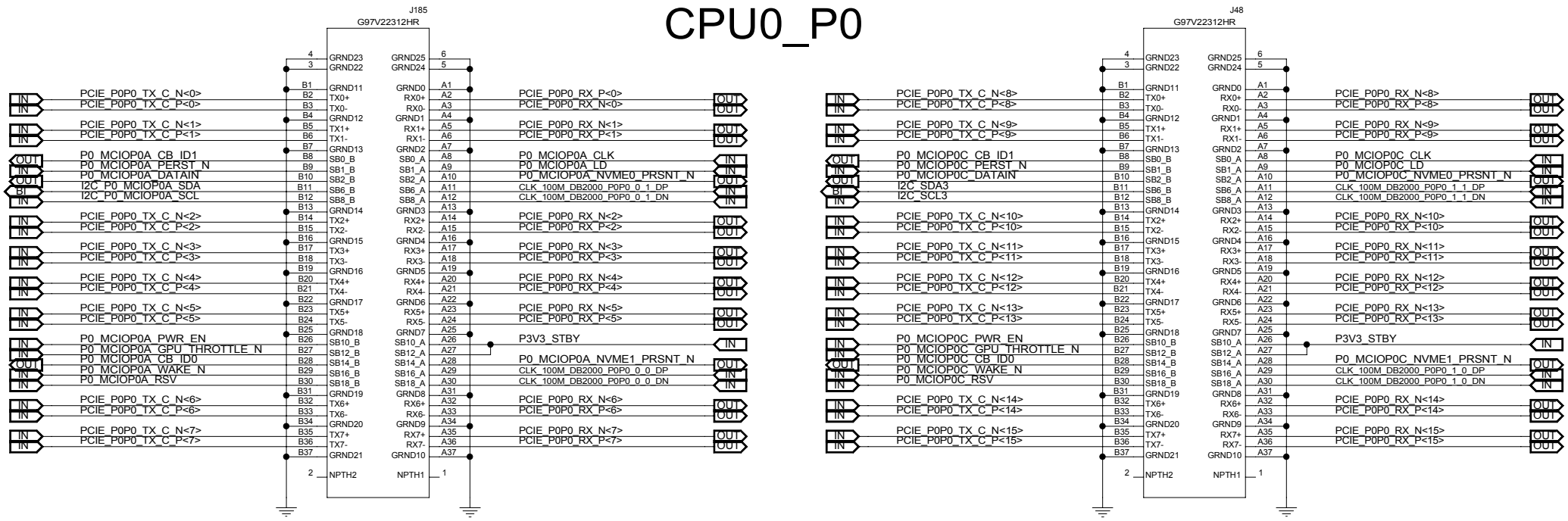

MODULE=---

FUNCTION=---

CNIT TECHNOLOGIES CO.,LTD.				
BOARD NAME BM-H14DSP_VERA			DRAWINGNO CNIT0302K1D0DL	
DESIGNED	ZHUHUI 00746	DATE 2024/10/22	SHEET 125 OF 276	REV
REVIEWED	GUBIN 00260	DATE 2024/11/22	Sun Jan 05 15:49:50 2025	

THIS DOCUMENT AND THE TECHNICAL DATA DISCLOSED ARE PROPRIETARY TO CNIT TECHNOLOGIES CO., LTD. AND SHALL NOT BE DUPLICATED USED RELEASED OR DISCLOSED WITHOUT EXPRESSING WRITTEN PERMISSION.

MCIO:P0P1

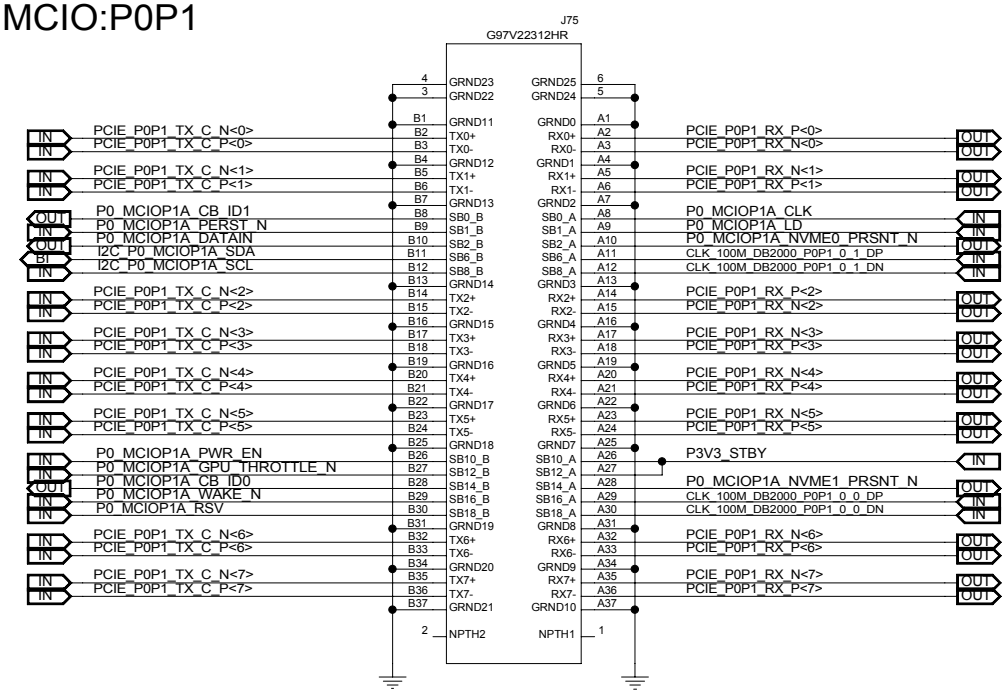

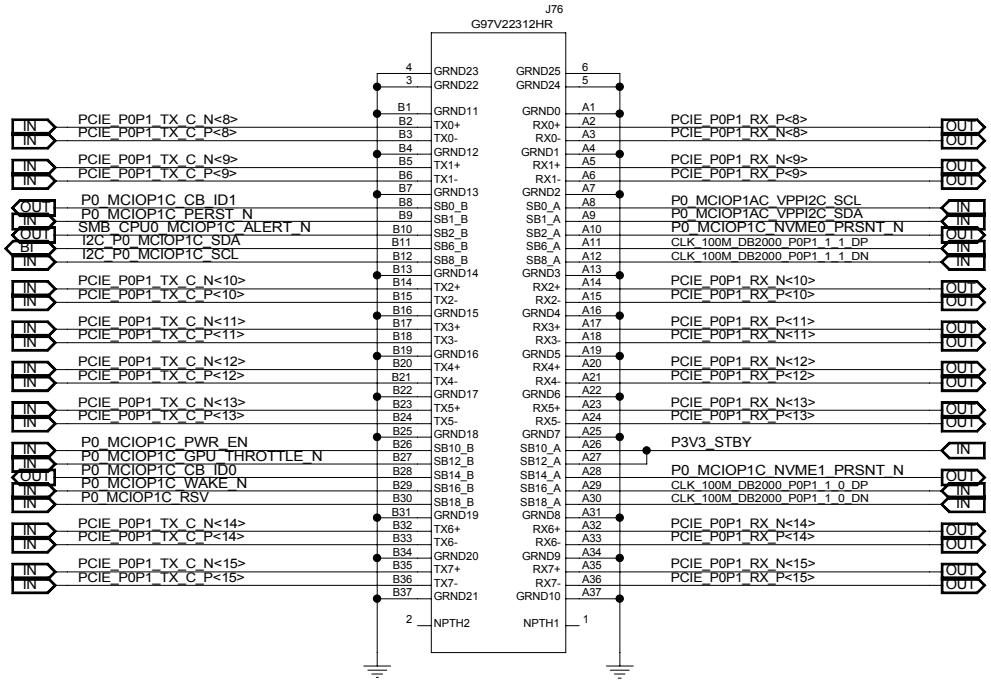

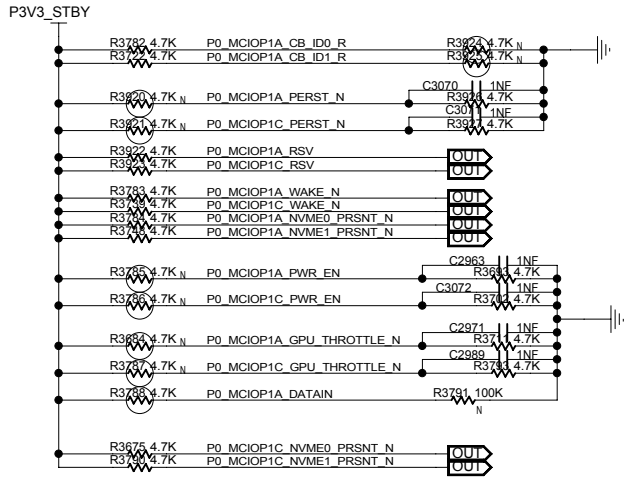

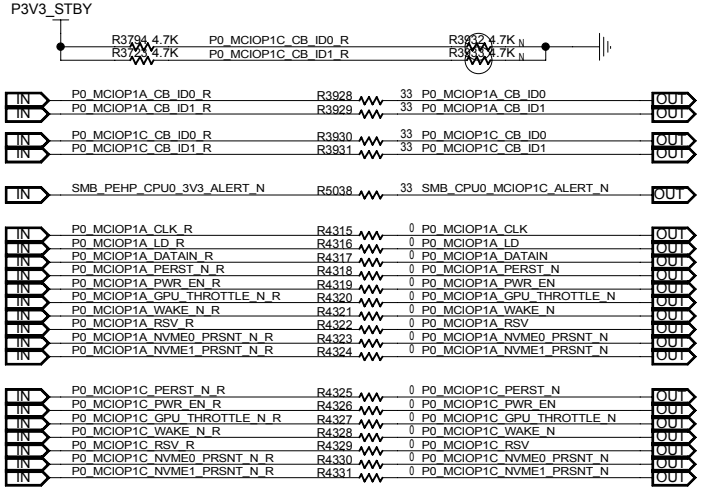

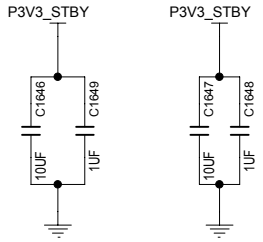

MODULE=---

FUNCTION=---

CNIT TECHNOLOGIES CO.,LTD.				
BOARD NAME BM-H14DSP_VERA			DRAWINGNO CNIT0302K1D0DL	
DESIGNED	ZHUHUI 00746	DATE 2024/10/22	SHEET 126 OF 276	REV
REVIEWED	GUBIN 00260	DATE 2024/11/22	Sat Jan 04 17:03:59 2025	

THIS DOCUMENT AND THE TECHNICAL DATA DISCLOSED ARE PROPRIETARY TO CNIT TECHNOLOGIES CO., LTD. AND SHALL NOT BE DUPLICATED USED RELEASED OR DISCLOSED WITHOUT EXPRESSING WRITTEN PERMISSION.

MCIO:P0P2

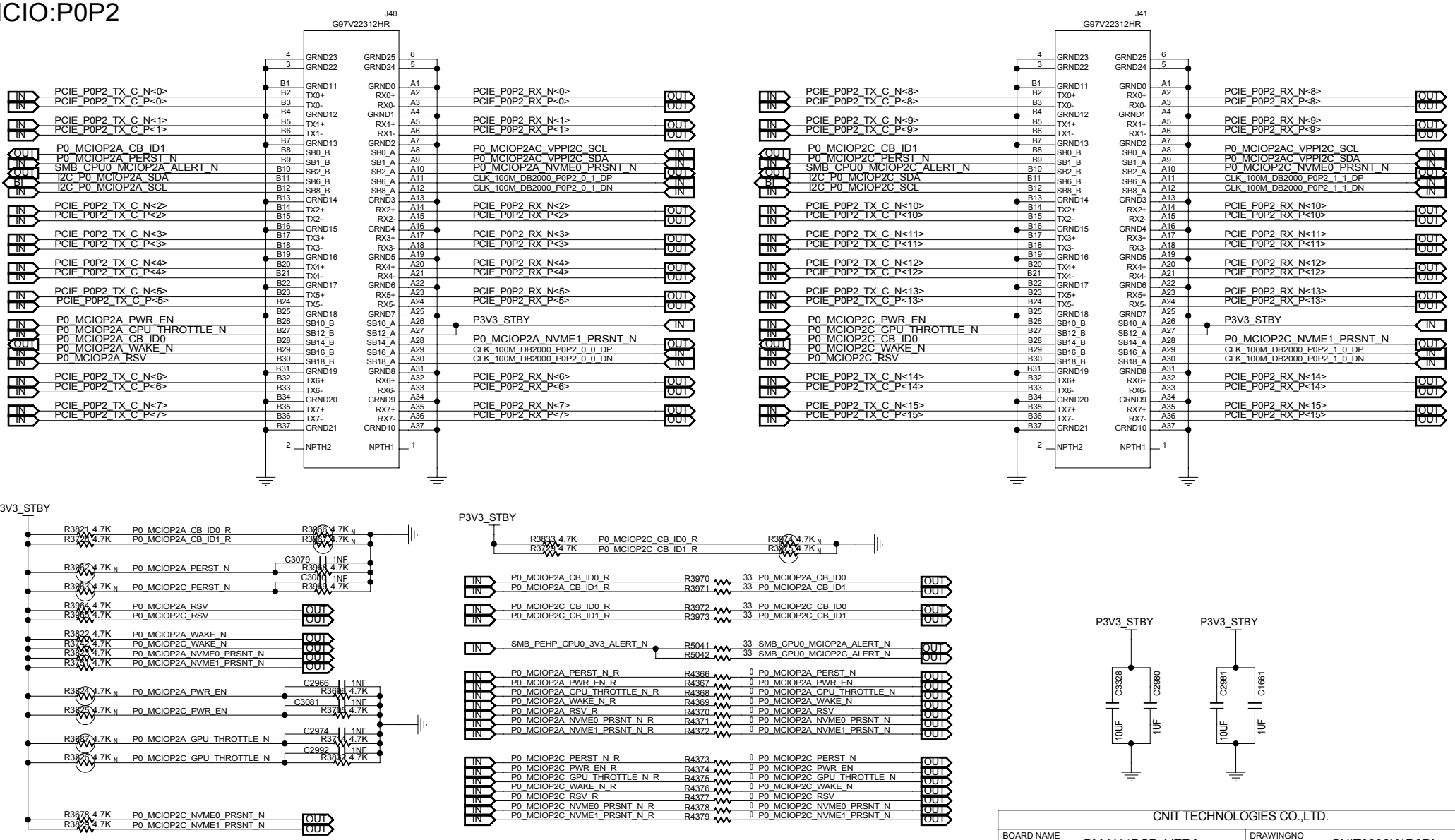

MODULE=---

FUNCTION=---

CNIT TECHNOLOGIES CO.,LTD.				
BOARD NAME BM-H14DSP_VERA			DRAWINGNO CNIT0302K1D0DL	
DESIGNED	ZHUHUI 00746	DATE 2024/10/22	SHEET 127 OF 276	REV
REVIEWED	GUBIN 00260	DATE 2024/11/22	Sun Jan 05 15:33:02 2025	

THIS DOCUMENT AND THE TECHNICAL DATA DISCLOSED ARE PROPRIETARY TO CNIT TECHNOLOGIES CO., LTD. AND SHALL NOT BE DUPLICATED USED RELEASED OR DISCLOSED WITHOUT EXPRESSING WRITTEN PERMISSION.

MCIO:P0P3

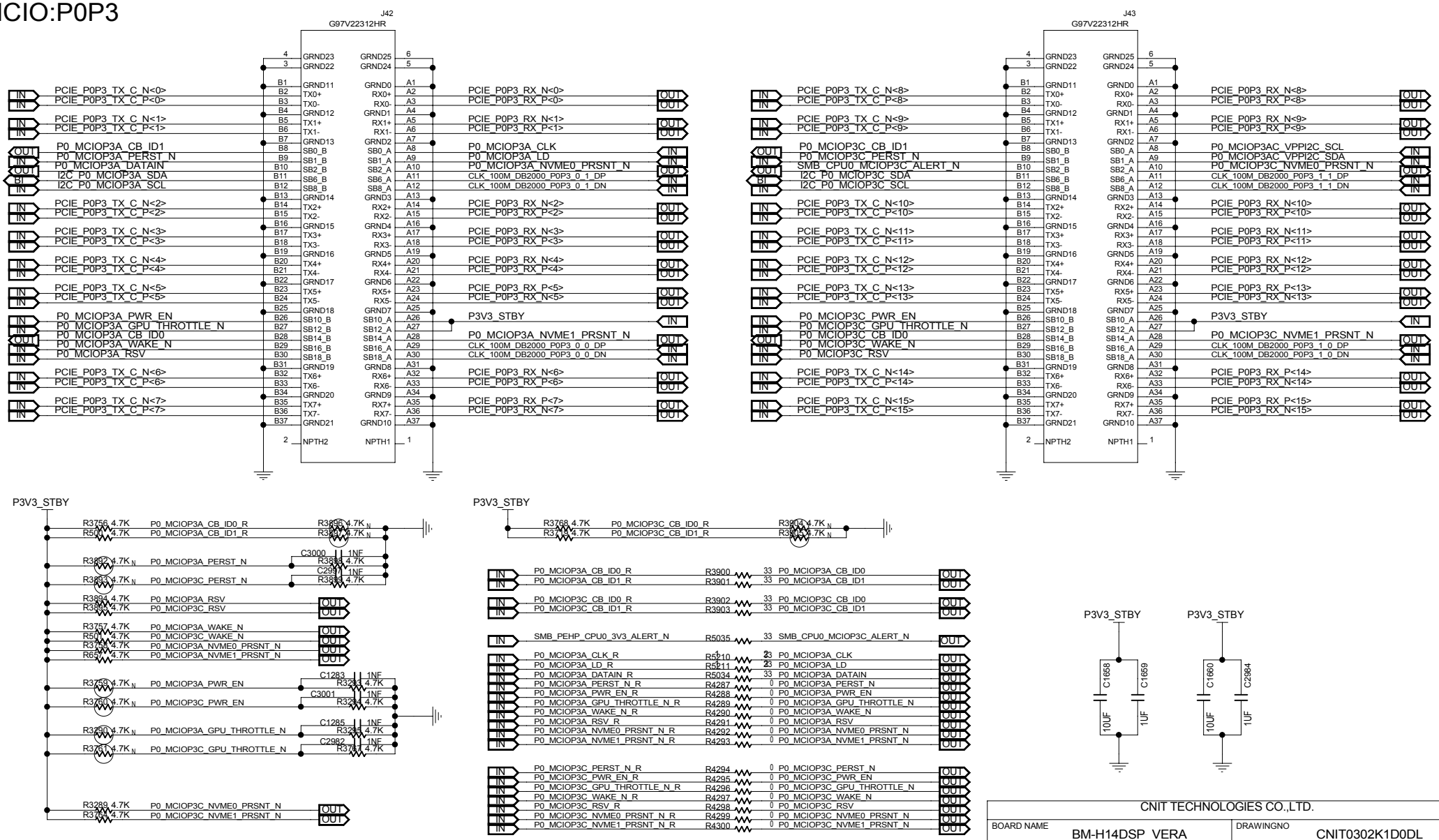

MODULE=---

FUNCTION=---

CNIT TECHNOLOGIES CO.,LTD.				
BOARD NAME BM-H14DSP_VERA			DRAWINGNO CNIT0302K1D0DL	
DESIGNED	ZHUHUI 00746	DATE 2024/10/22	SHEET 128 OF 276	REV
REVIEWED	GUBIN 00260	DATE 2024/11/22	Tue Jan 07 16:11:09 2025	

THIS DOCUMENT AND THE TECHNICAL DATA DISCLOSED ARE PROPRIETARY TO CNIT TECHNOLOGIES CO., LTD. AND SHALL NOT BE DUPLICATED USED RELEASED OR DISCLOSED WITHOUT EXPRESSING WRITTEN PERMISSION.

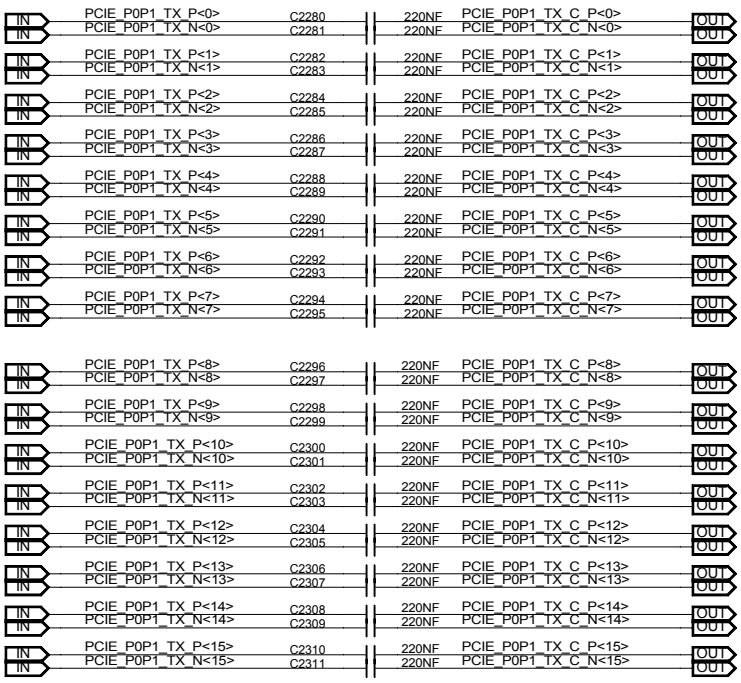

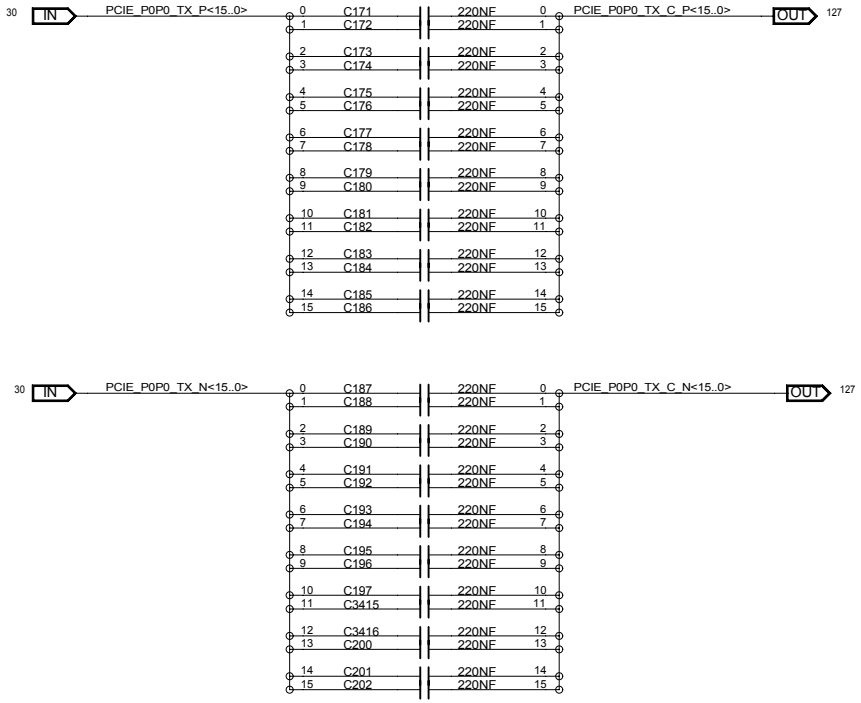

MODULE=---

FUNCTION=---

CNIT TECHNOLOGIES CO.,LTD.				
BOARD NAME BM-H14DSP_VERA			DRAWINGNO CNIT0302K1D0DL	
DESIGNED	ZHUHUI 00746	DATE 2024/10/22	SHEET 129 OF 276	REV
REVIEWED	GUBIN 00260	DATE 2024/11/22	Fri Dec 27 11:47:15 2024	

THIS DOCUMENT AND THE TECHNICAL DATA DISCLOSED ARE PROPRIETARY TO CNIT TECHNOLOGIES CO., LTD. AND SHALL NOT BE DUPLICATED USED RELEASED OR DISCLOSED WITHOUT EXPRESSING WRITTEN PERMISSION.

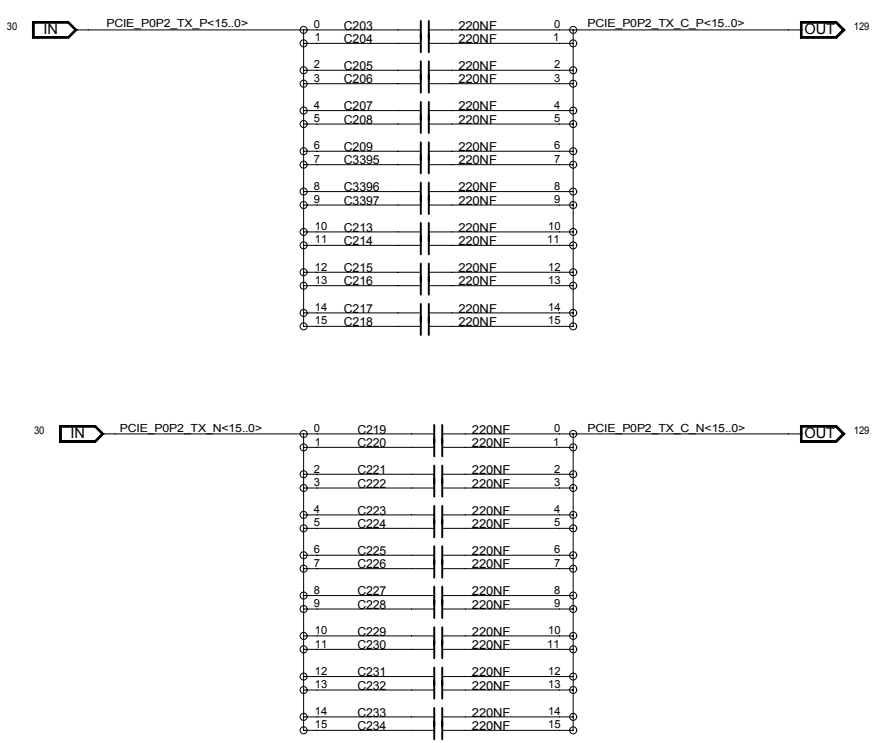

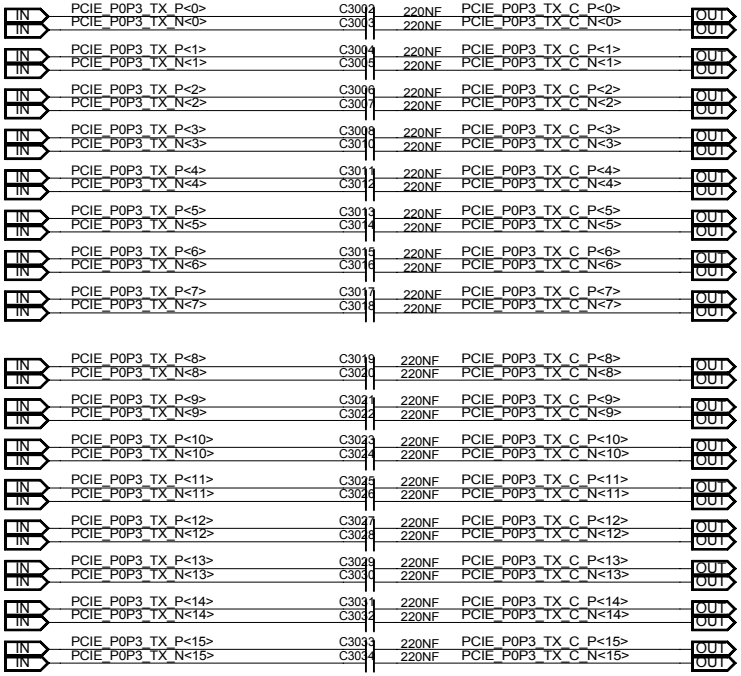

MODULE=---

FUNCTION=---

CNIT TECHNOLOGIES CO.,LTD.				
BOARD NAME BM-H14DSP_VERA			DRAWINGNO CNIT0302K1D0DL	
DESIGNED	ZHUHUI 00746	DATE 2024/10/22	SHEET 130 OF 276	REV
REVIEWED	GUBIN 00260	DATE 2024/11/22	Fri Dec 27 11:47:16 2024	

THIS DOCUMENT AND THE TECHNICAL DATA DISCLOSED ARE PROPRIETARY TO CNIT TECHNOLOGIES CO., LTD. AND SHALL NOT BE DUPLICATED USED RELEASED OR DISCLOSED WITHOUT EXPRESSING WRITTEN PERMISSION.

MCIO:P1G1

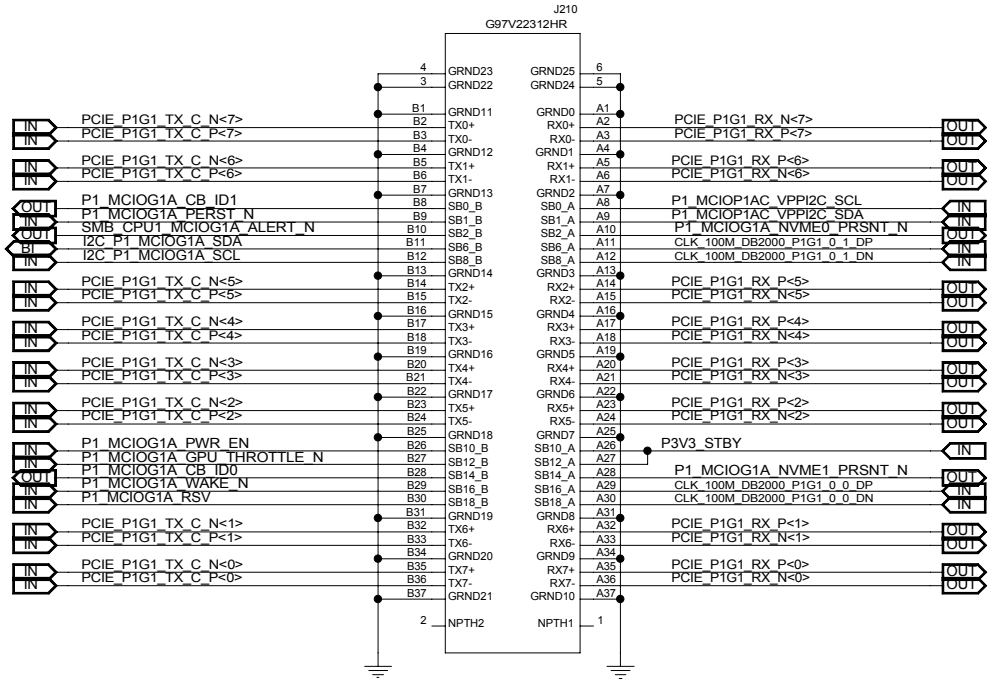

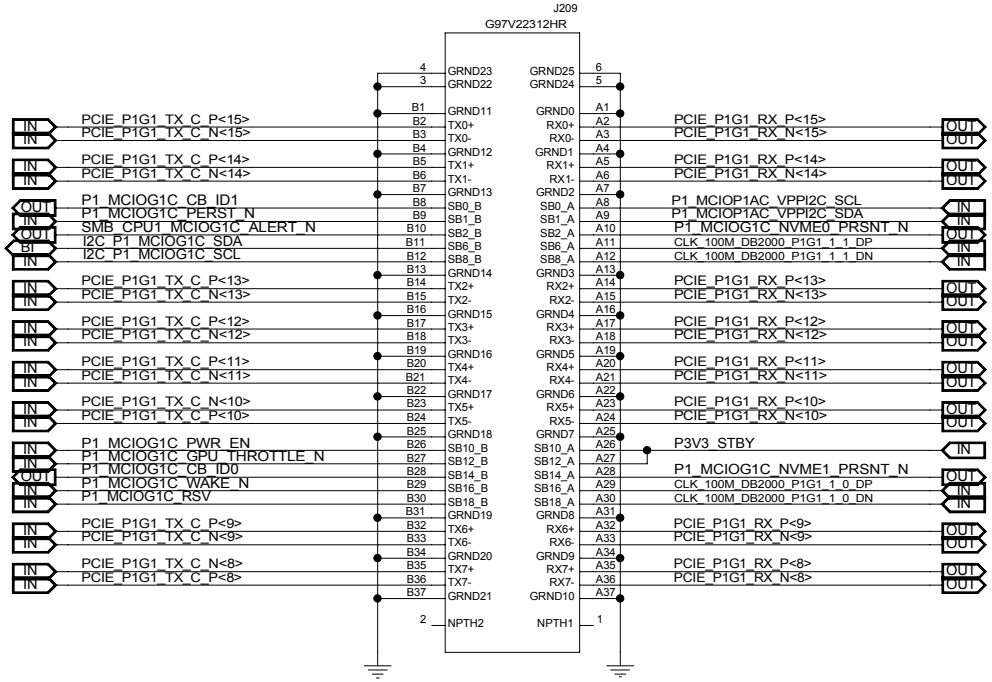

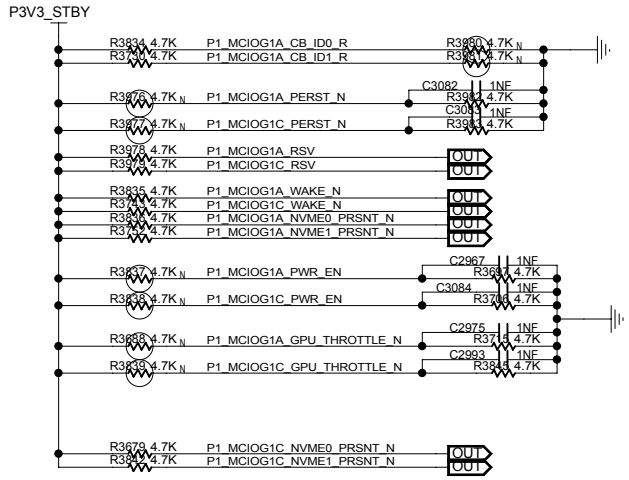

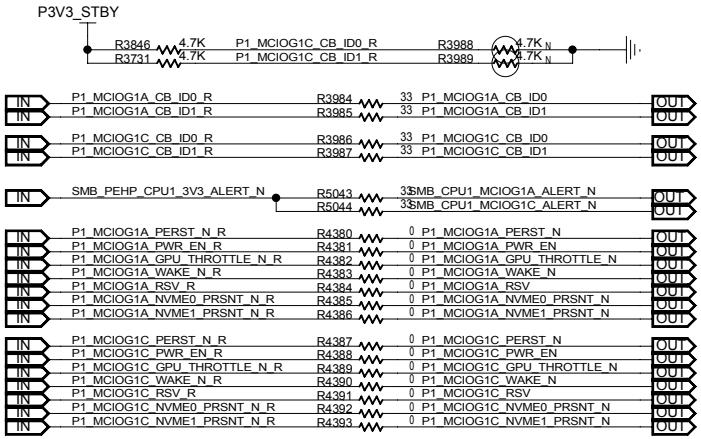

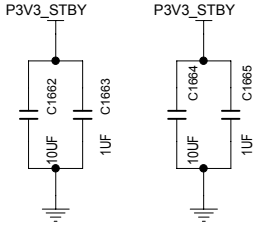

MODULE=---

FUNCTION=---

CNIT TECHNOLOGIES CO.,LTD.				
BOARD NAME BM-H14DSP_VERA			DRAWINGNO CNIT0302K1D0DL	
DESIGNED	ZHUHUI 00746	DATE 2024/10/22	SHEET 131 OF 276	REV
REVIEWED	GUBIN 00260	DATE 2024/11/22	Sun Jan 05 17:34:31 2025	

THIS DOCUMENT AND THE TECHNICAL DATA DISCLOSED ARE PROPRIETARY TO CNIT TECHNOLOGIES CO., LTD. AND SHALL NOT BE DUPLICATED USED RELEASED OR DISCLOSED WITHOUT EXPRESSING WRITTEN PERMISSION.

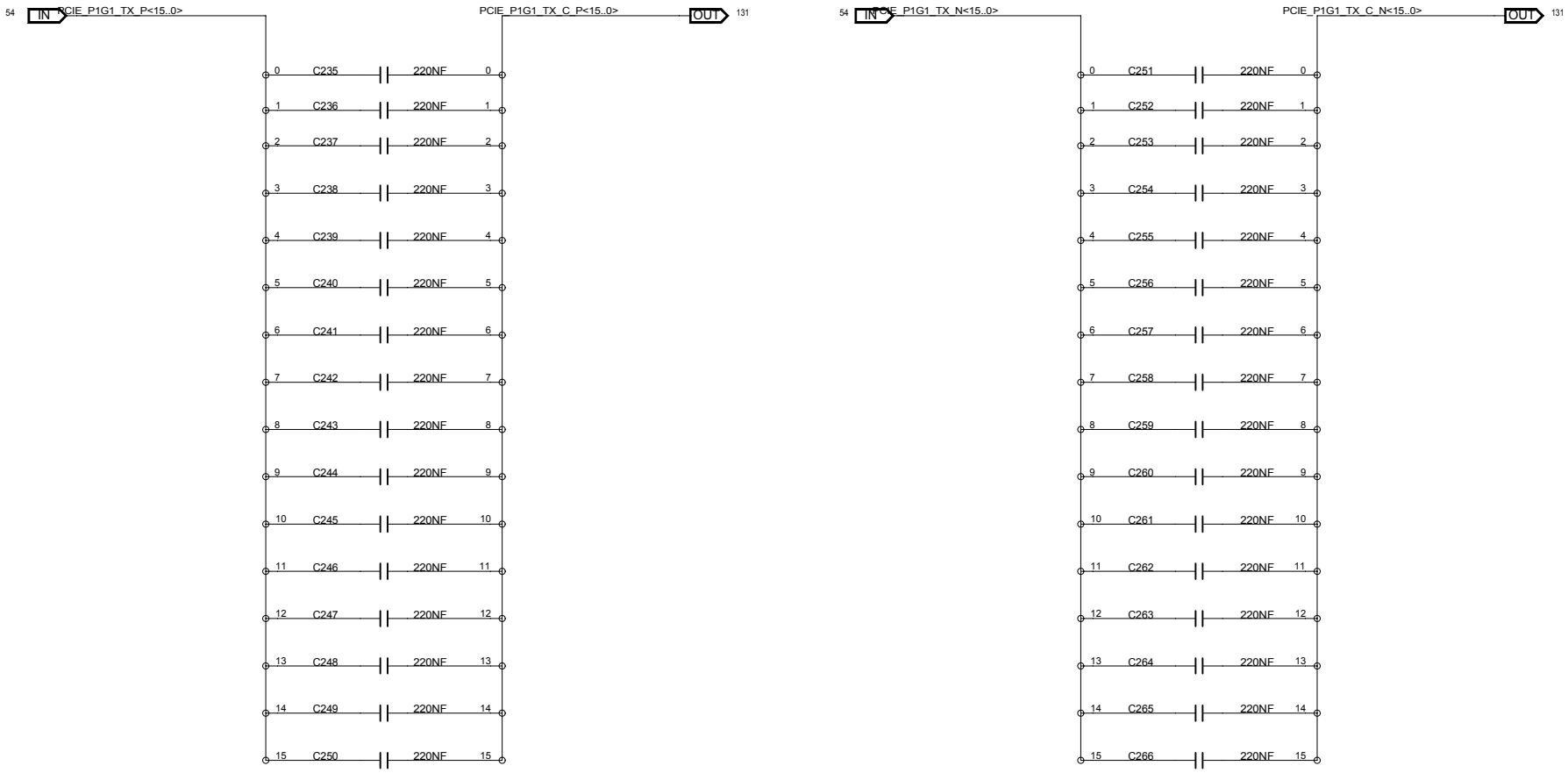

MODULE=---
FUNCTION=---

CNIT TECHNOLOGIES CO.,LTD.				
BOARD NAME BM-H14DSP_VERA			DRAWINGNO CNIT0302K1D0DL	
DESIGNED	ZHUHUI 00746	DATE 2024/10/22	SHEET 132 OF 276	REV
REVIEWED	GUBIN 00260	DATE 2024/11/22	Fri Dec 27 11:47:29 2024	

THIS DOCUMENT AND THE TECHNICAL DATA DISCLOSED ARE PROPRIETARY TO CNIT TECHNOLOGIES CO., LTD. AND SHALL NOT BE DUPLICATED USED RELEASED OR DISCLOSED WITHOUT EXPRESSING WRITTEN PERMISSION.

MCIO:P1P0

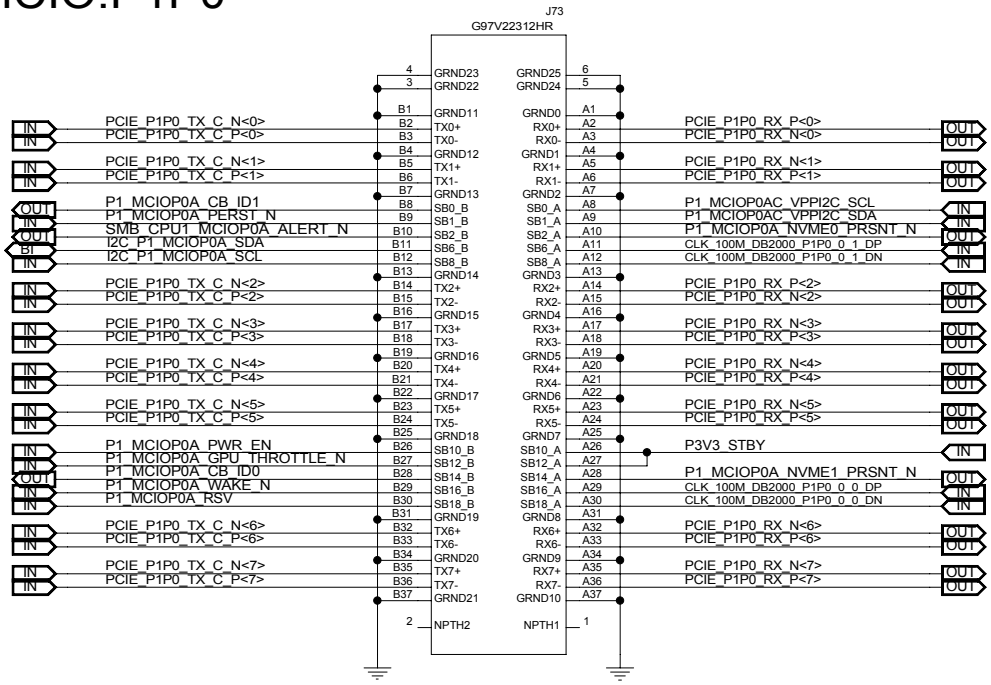

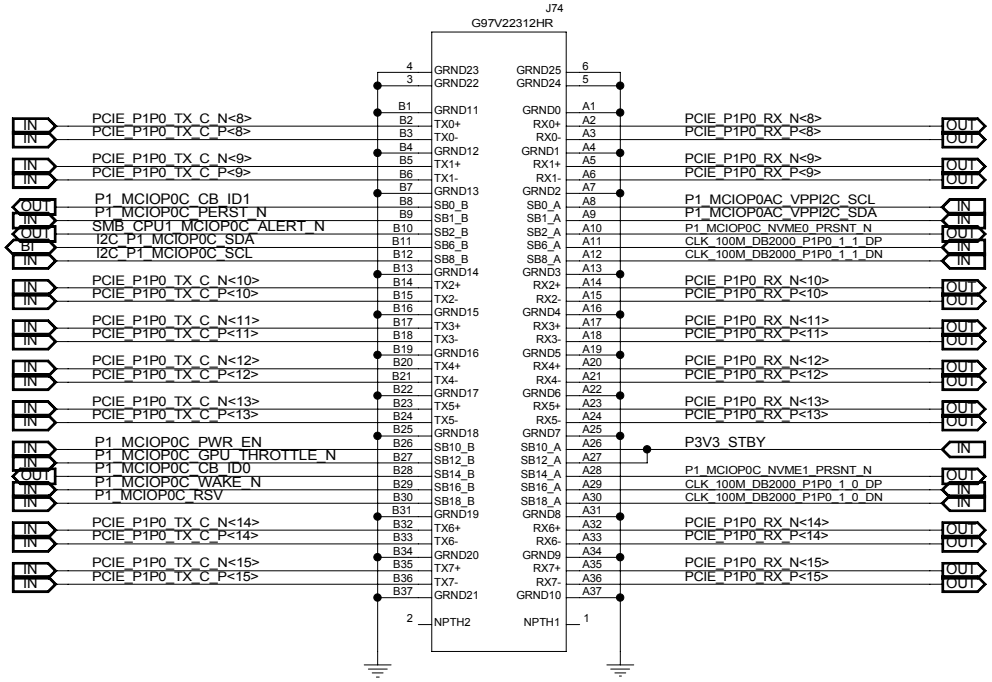

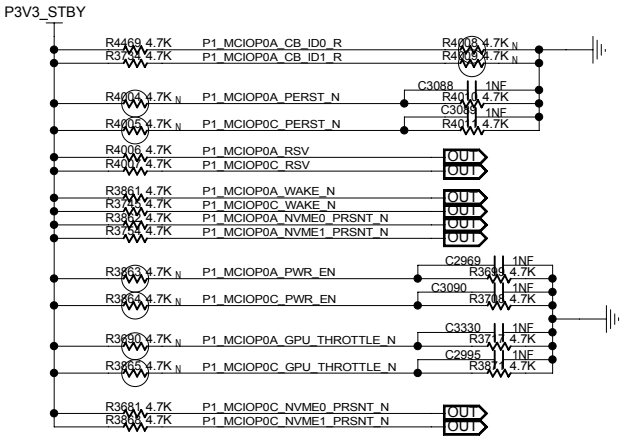

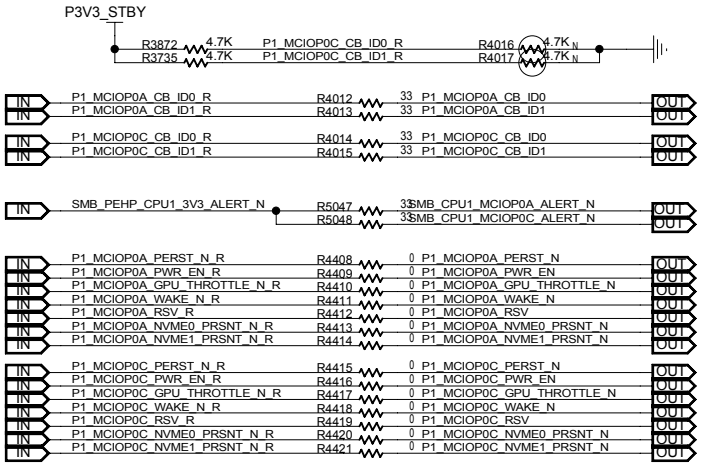

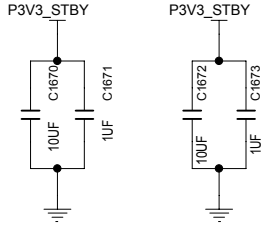

MODULE=---

FUNCTION=---

CNIT TECHNOLOGIES CO.,LTD.				
BOARD NAME BM-H14DSP_VERA			DRAWINGNO CNIT0302K1D0DL	
DESIGNED	ZHUHUI 00746	DATE 2024/10/22	SHEET 133 OF 276	REV
REVIEWED	GUBIN 00260	DATE 2024/11/22	Sun Jan 05 16:13:37 2025	

THIS DOCUMENT AND THE TECHNICAL DATA DISCLOSED ARE PROPRIETARY TO CNIT TECHNOLOGIES CO., LTD. AND SHALL NOT BE DUPLICATED USED RELEASED OR DISCLOSED WITHOUT EXPRESSING WRITTEN PERMISSION.

MCIO:P1P1

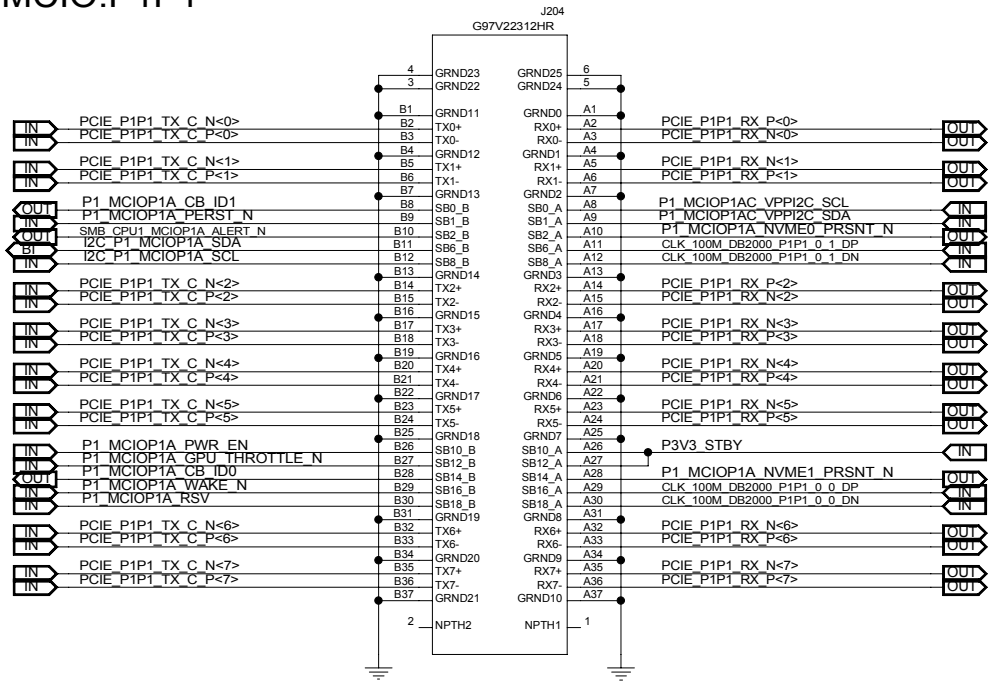

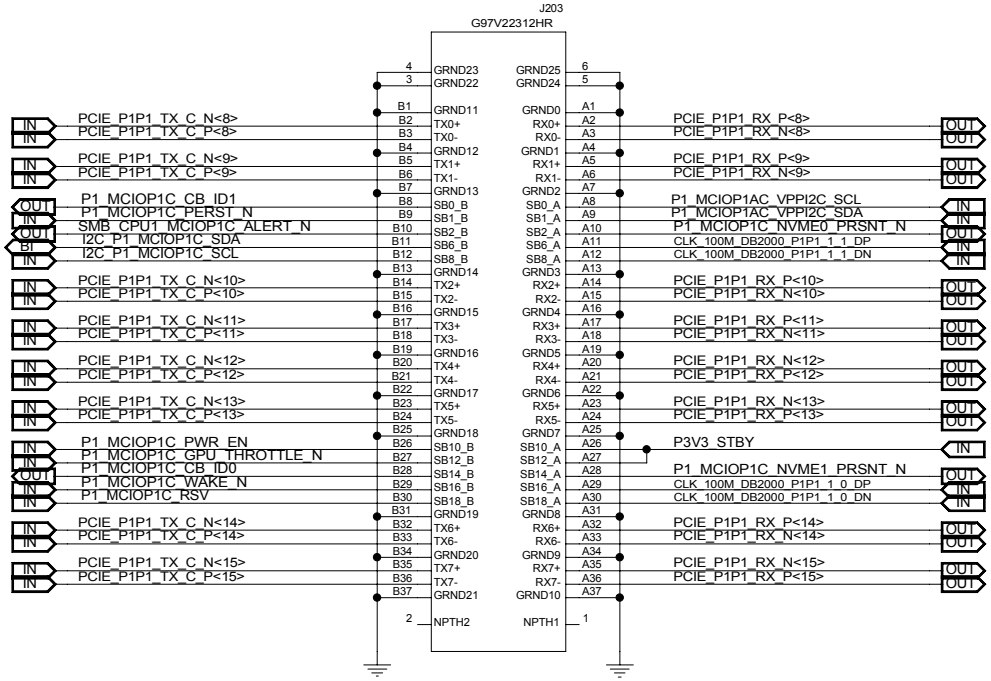

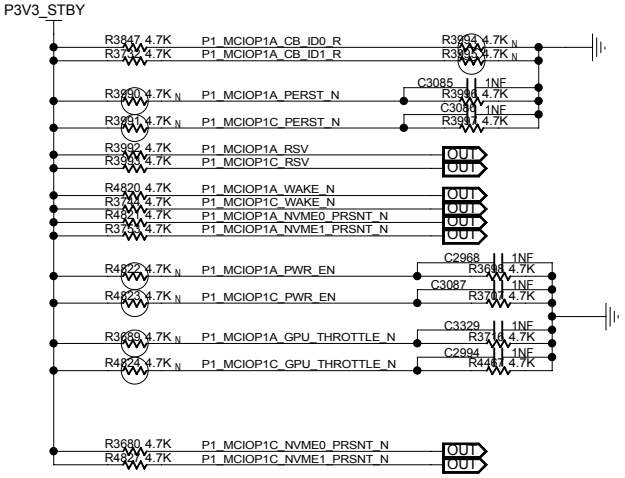

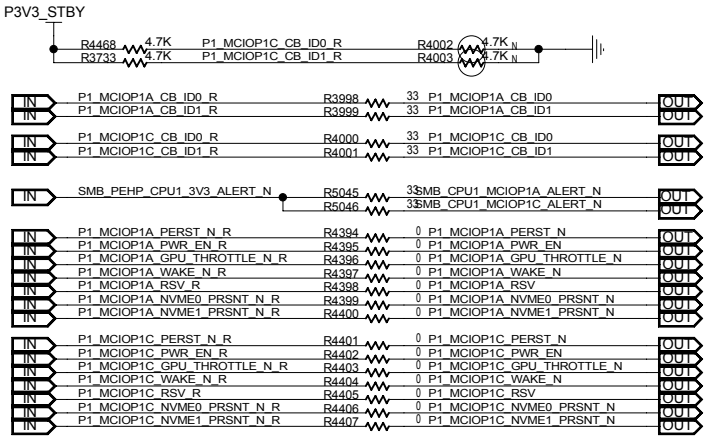

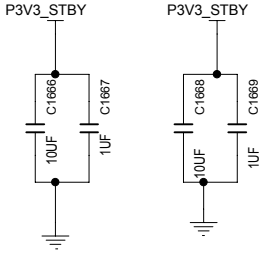

MODULE=---

FUNCTION=---

CNIT TECHNOLOGIES CO.,LTD.				
BOARD NAME BM-H14DSP_VERA			DRAWINGNO CNIT0302K1D0DL	
DESIGNED	ZHUHUI 00746	DATE 2024/10/22	SHEET 134 OF 276	REV
REVIEWED	GUBIN 00260	DATE 2024/11/22	Sun Jan 05 16:25:05 2025	

THIS DOCUMENT AND THE TECHNICAL DATA DISCLOSED ARE PROPRIETARY TO CNIT TECHNOLOGIES CO., LTD. AND SHALL NOT BE DUPLICATED USED RELEASED OR DISCLOSED WITHOUT EXPRESSING WRITTEN PERMISSION.

MCIO:P1P2

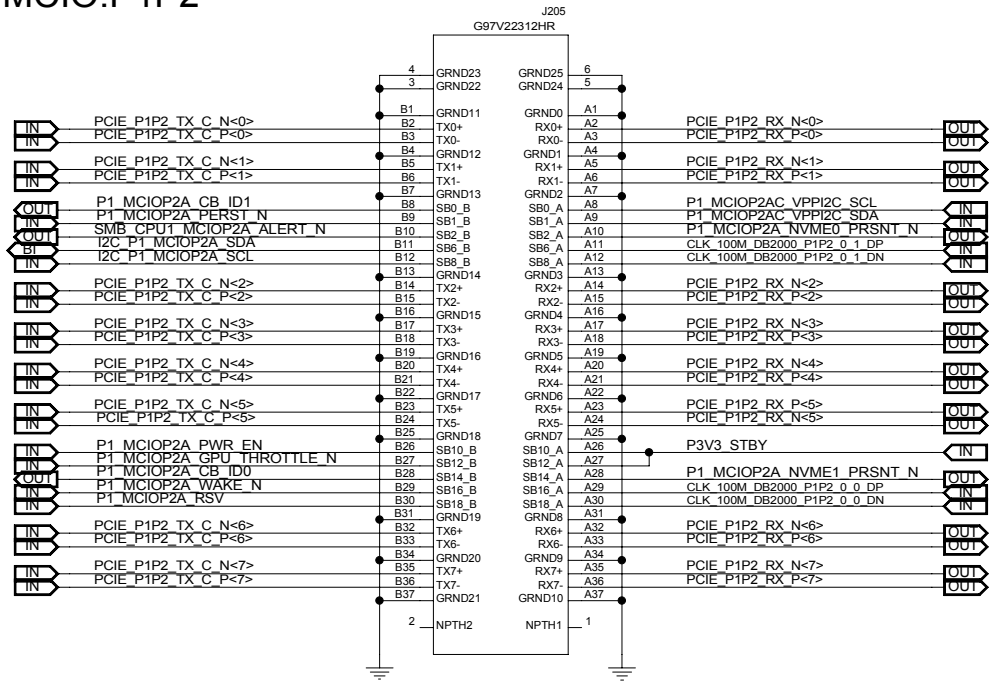

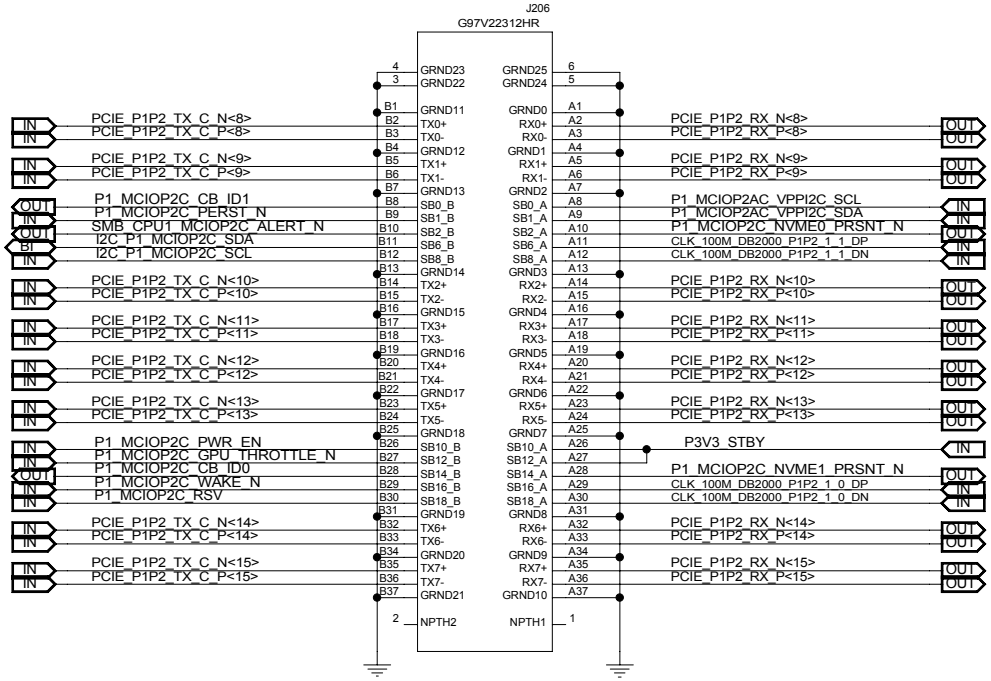

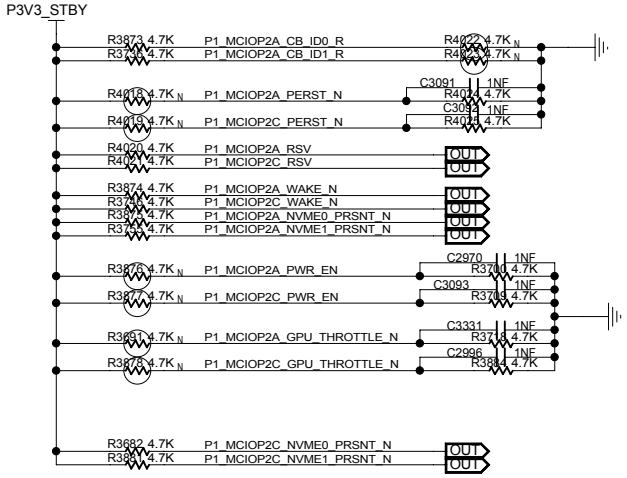

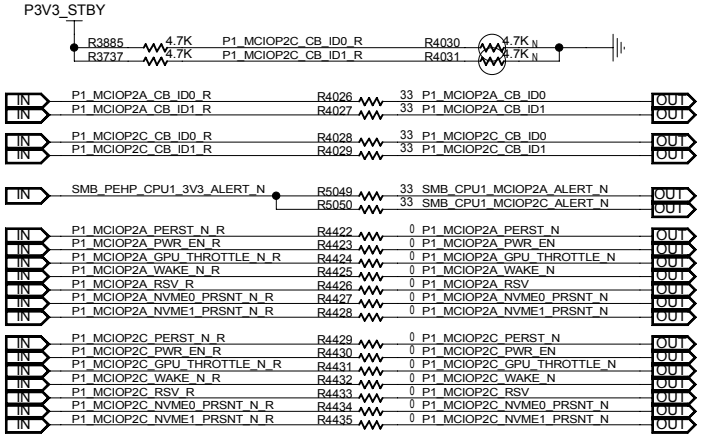

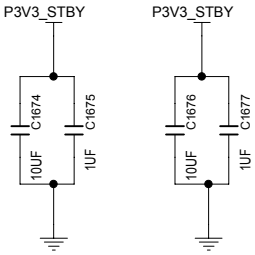

MODULE=---

FUNCTION=---

CNIT TECHNOLOGIES CO.,LTD.				
BOARD NAME BM-H14DSP_VERA			DRAWINGNO CNIT0302K1D0DL	
DESIGNED	ZHUHUI 00746	DATE 2024/10/22	SHEET 135 OF 276	REV
REVIEWED	GUBIN 00260	DATE 2024/11/22	Sun Jan 05 17:01:40 2025	

THIS DOCUMENT AND THE TECHNICAL DATA DISCLOSED ARE PROPRIETARY TO CNIT TECHNOLOGIES CO., LTD. AND SHALL NOT BE DUPLICATED USED RELEASED OR DISCLOSED WITHOUT EXPRESSING WRITTEN PERMISSION.

MCIO:P0P3

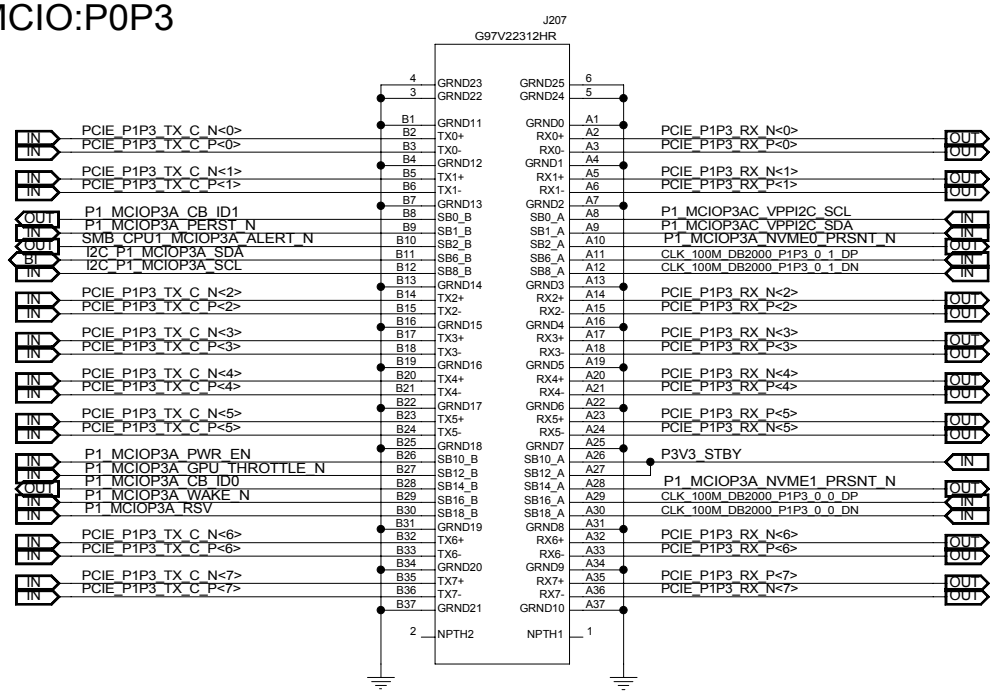

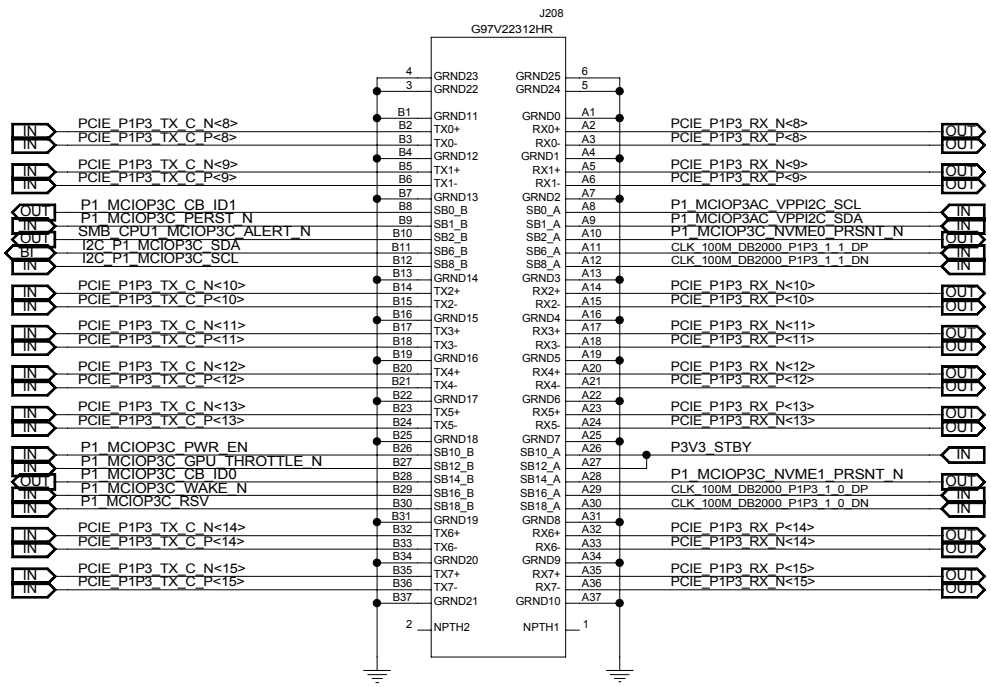

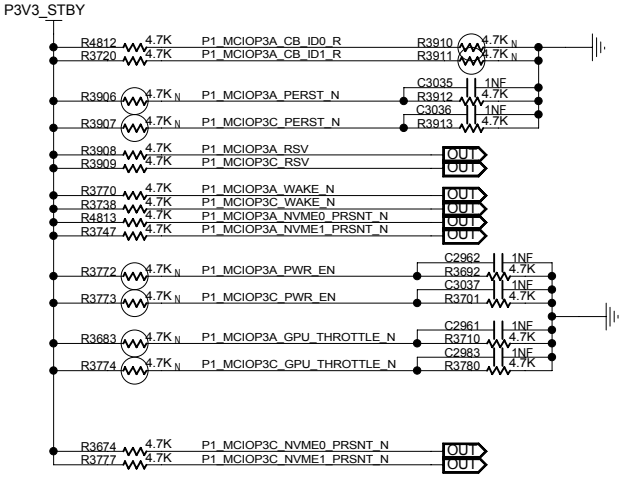

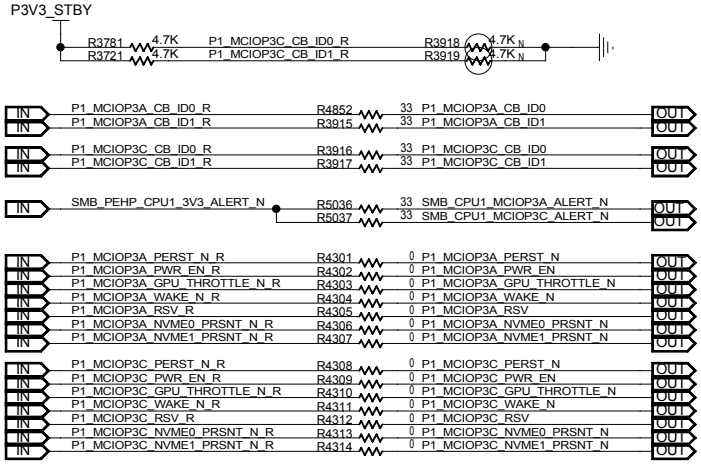

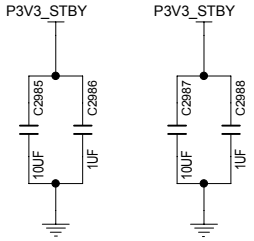

MODULE=---

FUNCTION=---

CNIT TECHNOLOGIES CO.,LTD.				
BOARD NAME BM-H14DSP_VERA			DRAWINGNO CNIT0302K1D0DL	
DESIGNED	ZHUHUI 00746	DATE 2024/10/22	SHEET 136 OF 276	REV
REVIEWED	GUBIN 00260	DATE 2024/11/22	Tue Jan 07 17:23:22 2025	

THIS DOCUMENT AND THE TECHNICAL DATA DISCLOSED ARE PROPRIETARY TO CNIT TECHNOLOGIES CO., LTD. AND SHALL NOT BE DUPLICATED USED RELEASED OR DISCLOSED WITHOUT EXPRESSING WRITTEN PERMISSION.

MODULE=---

FUNCTION=---

CNIT TECHNOLOGIES CO.,LTD.				
BOARD NAME BM-H14DSP_VERA			DRAWINGNO CNIT0302K1D0DL	
DESIGNED	ZHUHUI 00746	DATE 2024/10/22	SHEET 137 OF 276	REV
REVIEWED	GUBIN 00260	DATE 2024/11/22	Fri Dec 27 11:47:53 2024	

THIS DOCUMENT AND THE TECHNICAL DATA DISCLOSED ARE PROPRIETARY TO CNIT TECHNOLOGIES CO., LTD. AND SHALL NOT BE DUPLICATED USED RELEASED OR DISCLOSED WITHOUT EXPRESSING WRITTEN PERMISSION.

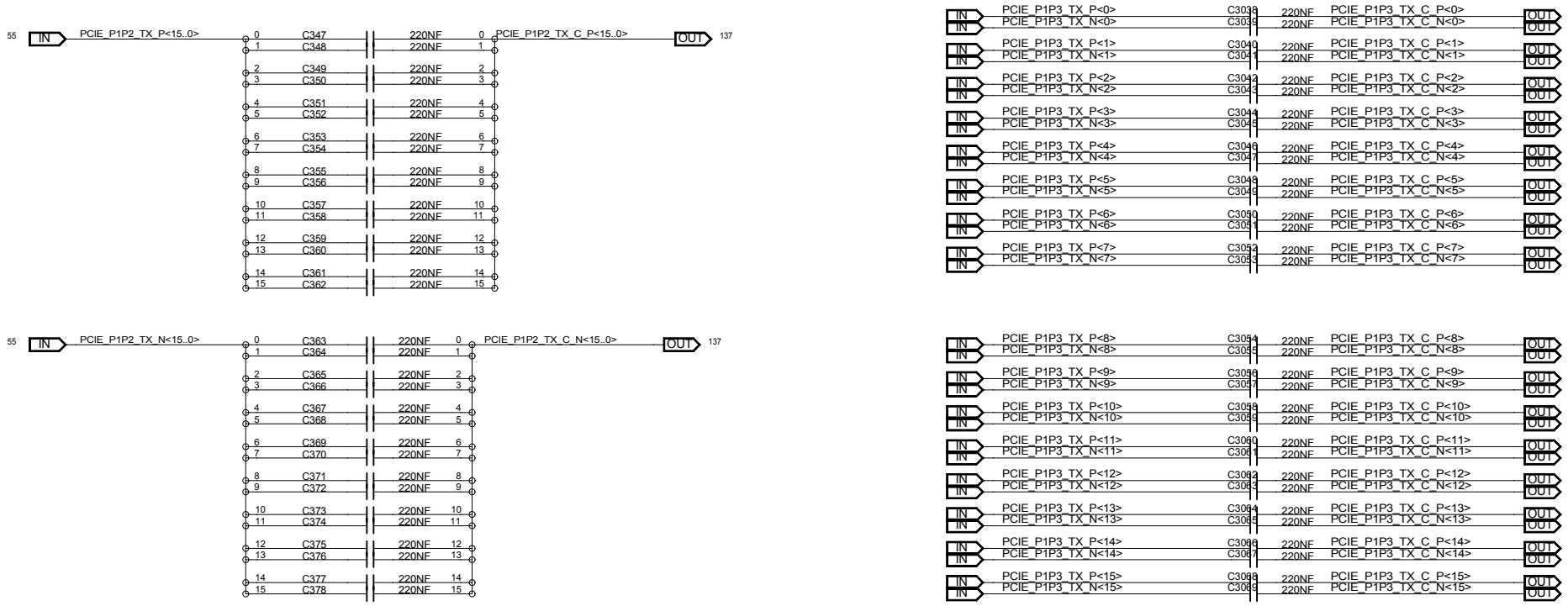

MODULE=---

FUNCTION=---

CNIT TECHNOLOGIES CO.,LTD.				
BOARD NAME BM-H14DSP_VERA			DRAWINGNO CNIT0302K1D0DL	
DESIGNED	ZHUHUI 00746	DATE 2024/10/22	SHEET 138 OF 276	REV
REVIEWED	GUBIN 00260	DATE 2024/11/22	Fri Dec 27 11:47:54 2024	

THIS DOCUMENT AND THE TECHNICAL DATA DISCLOSED ARE PROPRIETARY TO CNIT TECHNOLOGIES CO., LTD. AND SHALL NOT BE DUPLICATED USED RELEASED OR DISCLOSED WITHOUT EXPRESSING WRITTEN PERMISSION.

MCIO WAKE/RST

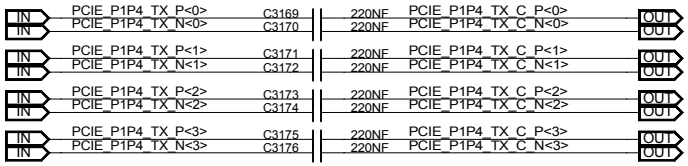

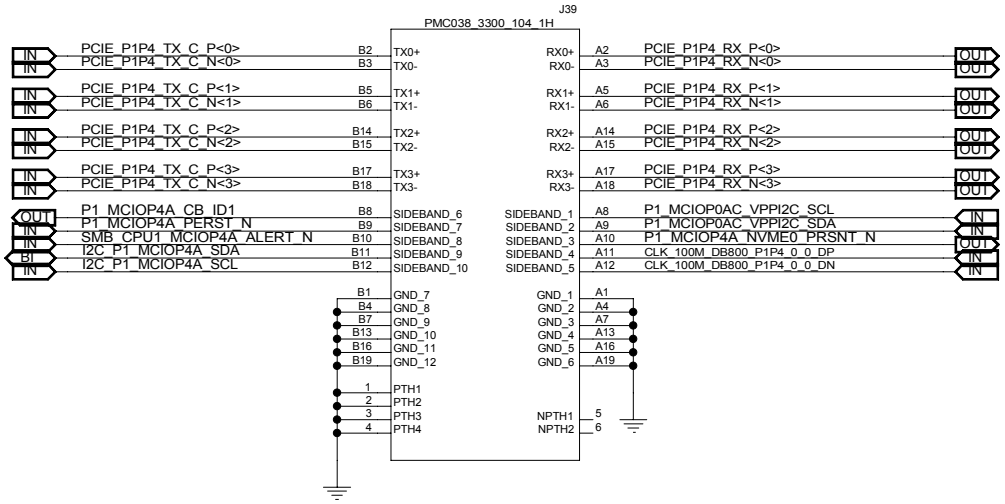

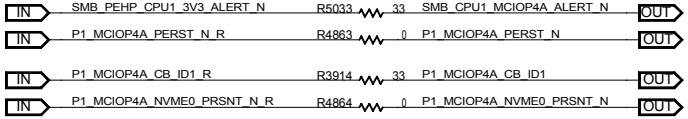

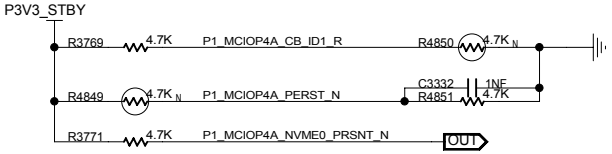

MODULE=---

FUNCTION=---

CNIT TECHNOLOGIES CO.,LTD.				
BOARD NAME BM-H14DSP_VERA			DRAWINGNO CNIT0302K1D0DL	
DESIGNED	ZHUHUI 00746	DATE 2024/10/22	SHEET 139 OF 276	REV
REVIEWED	GUBIN 00260	DATE 2024/11/22	Tue Jan 07 16:12:39 2025	

THIS DOCUMENT AND THE TECHNICAL DATA DISCLOSED ARE PROPRIETARY TO CNIT TECHNOLOGIES CO., LTD. AND SHALL NOT BE DUPLICATED USED RELEASED OR DISCLOSED WITHOUT EXPRESSING WRITTEN PERMISSION.

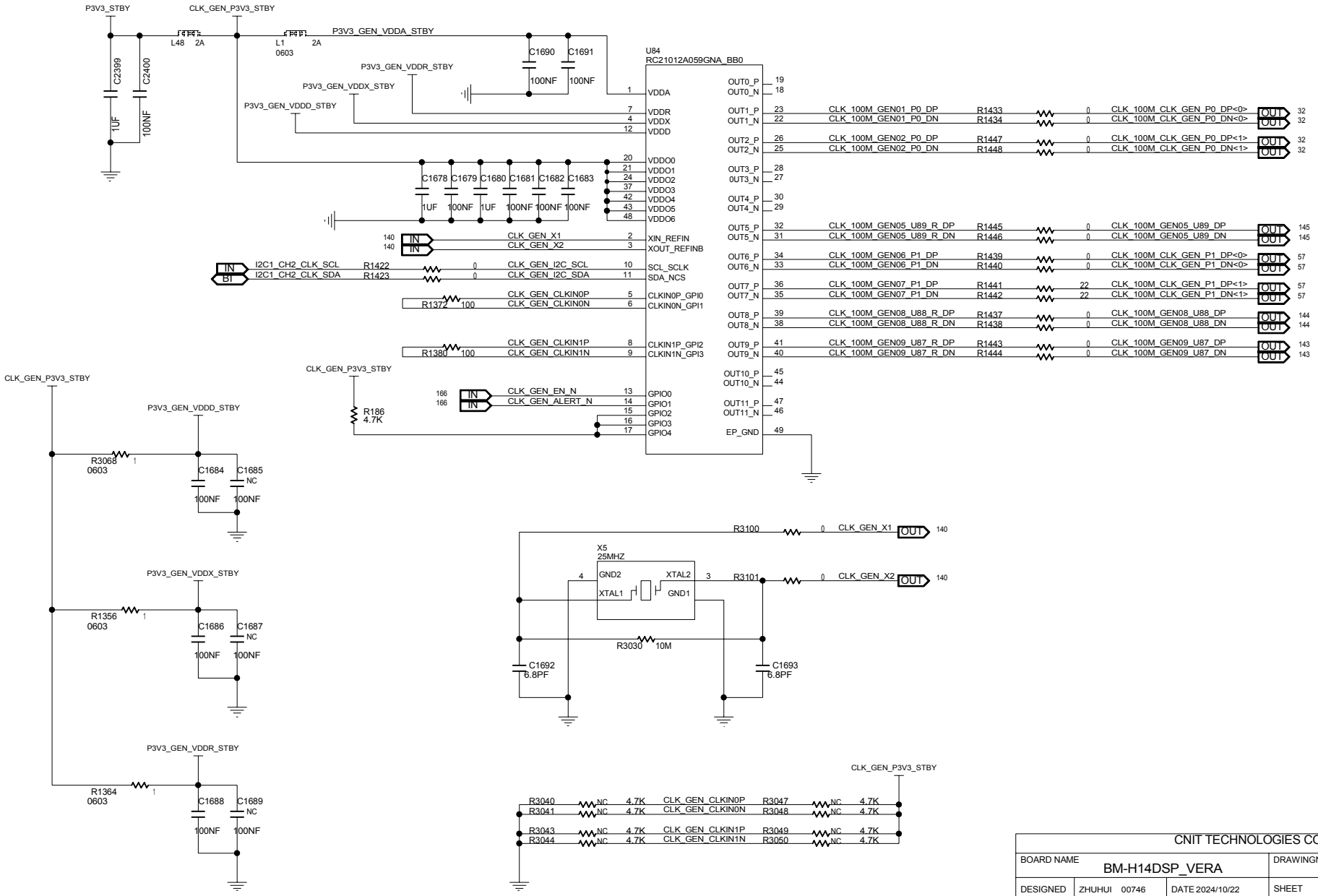

MODULE=---

FUNCTION=---

CNIT TECHNOLOGIES CO.,LTD.				
BOARD NAME BM-H14DSP_VERA			DRAWINGNO CNIT0302K1D0DL	
DESIGNED	ZHUHUI 00746	DATE 2024/10/22	SHEET 140 OF 276	REV
REVIEWED	GUBIN 00260	DATE 2024/11/22	Thu Jan 02 20:34:14 2025	

THIS DOCUMENT AND THE TECHNICAL DATA DISCLOSED ARE PROPRIETARY TO CNIT TECHNOLOGIES CO., LTD. AND SHALL NOT BE DUPLICATED USED RELEASED OR DISCLOSED WITHOUT EXPRESSING WRITTEN PERMISSION.

RESERVED

MODULE=---
FUNCTION=---

CNIT TECHNOLOGIES CO.,LTD.				
BOARD NAME BM-H14DSP_VERA			DRAWINGNO CNIT0302K1D0DL	
DESIGNED	ZHUHUI 00746	DATE 2024/10/22	SHEET 141 OF 276	REV
REVIEWED	GUBIN 00260	DATE 2024/11/22	Thu Oct 17 16:39:02 2024	

THIS DOCUMENT AND THE TECHNICAL DATA DISCLOSED ARE PROPRIETARY TO CNIT TECHNOLOGIES CO., LTD. AND SHALL NOT BE DUPLICATED USED RELEASED OR DISCLOSED WITHOUT EXPRESSING WRITTEN PERMISSION.

RESERVED

MODULE=---
FUNCTION=---

CNIT TECHNOLOGIES CO.,LTD.				
BOARD NAME BM-H14DSP_VERA			DRAWINGNO CNIT0302K1D0DL	
DESIGNED	ZHUHUI 00746	DATE 2024/10/22	SHEET 142 OF 276	REV
REVIEWED	GUBIN 00260	DATE 2024/11/22	Thu Oct 17 16:39:02 2024	

THIS DOCUMENT AND THE TECHNICAL DATA DISCLOSED ARE PROPRIETARY TO CNIT TECHNOLOGIES CO., LTD. AND SHALL NOT BE DUPLICATED USED RELEASED OR DISCLOSED WITHOUT EXPRESSING WRITTEN PERMISSION.

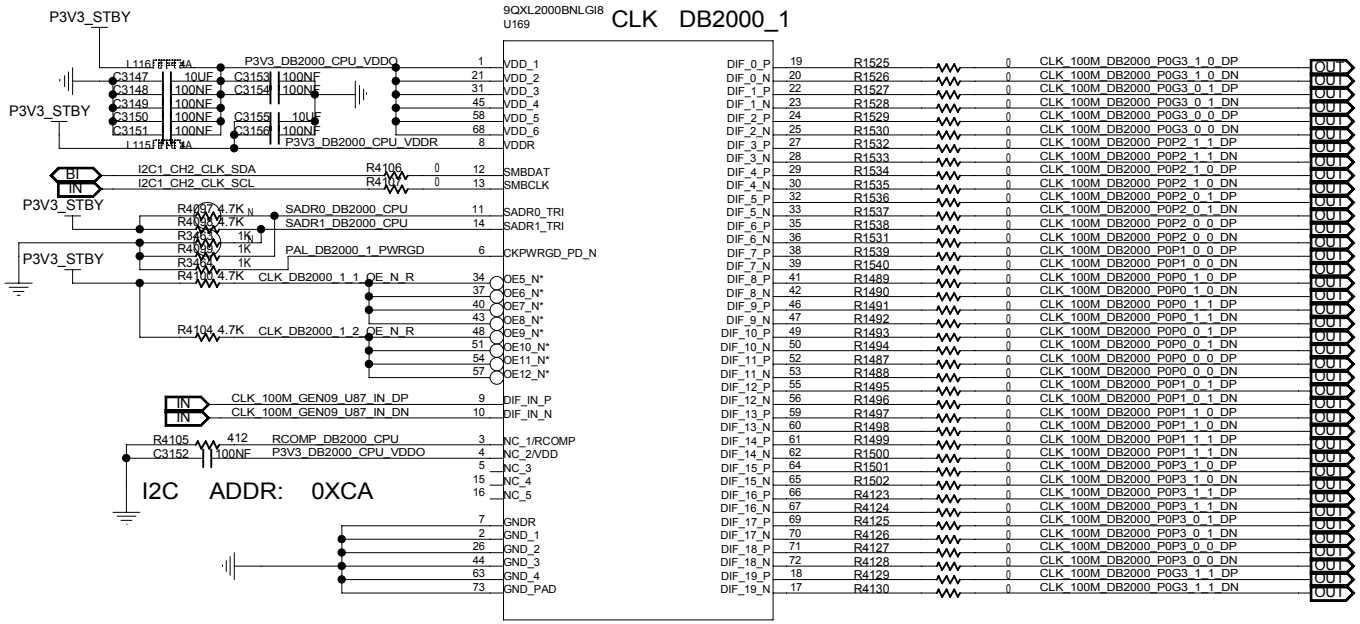

MODULE=---

FUNCTION=---

CNIT TECHNOLOGIES CO.,LTD.				
BOARD NAME BM-H14DSP_VERA			DRAWINGNO CNIT0302K1D0DL	
DESIGNED	ZHUHUI 00746	DATE 2024/10/22	SHEET 143 OF 276	REV
REVIEWED	GUBIN 00260	DATE 2024/11/22	Thu Jan 02 20:34:19 2025	

THIS DOCUMENT AND THE TECHNICAL DATA DISCLOSED ARE PROPRIETARY TO CNIT TECHNOLOGIES CO., LTD. AND SHALL NOT BE DUPLICATED USED RELEASED OR DISCLOSED WITHOUT EXPRESSING WRITTEN PERMISSION.

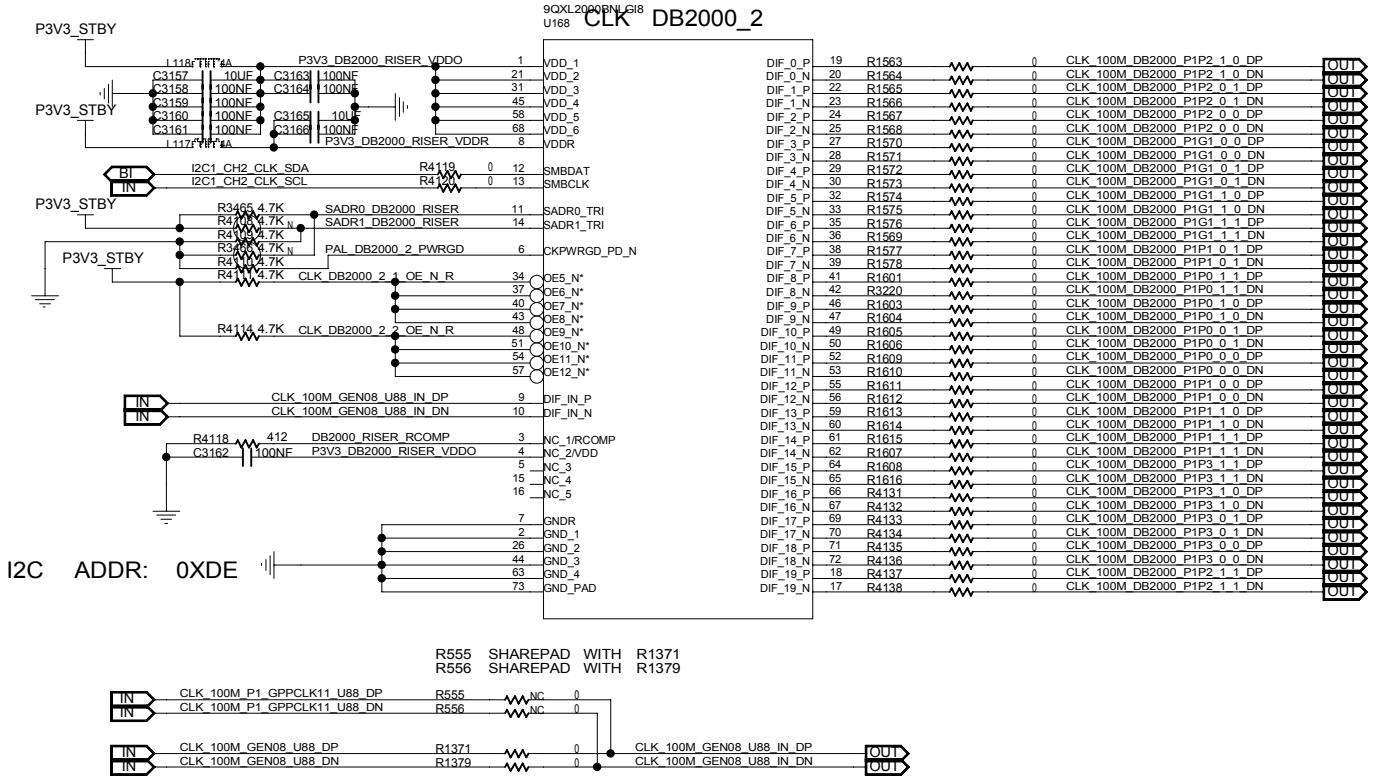

MODULE=---

FUNCTION=---

CNIT TECHNOLOGIES CO.,LTD.				
BOARD NAME BM-H14DSP_VERA			DRAWINGNO CNIT0302K1D0DL	
DESIGNED	ZHUHUI 00746	DATE 2024/10/22	SHEET 144 OF 276	REV
REVIEWED	GUBIN 00260	DATE 2024/11/22	Thu Jan 02 20:34:24 2025	

THIS DOCUMENT AND THE TECHNICAL DATA DISCLOSED ARE PROPRIETARY TO CNIT TECHNOLOGIES CO., LTD. AND SHALL NOT BE DUPLICATED USED RELEASED OR DISCLOSED WITHOUT EXPRESSING WRITTEN PERMISSION.

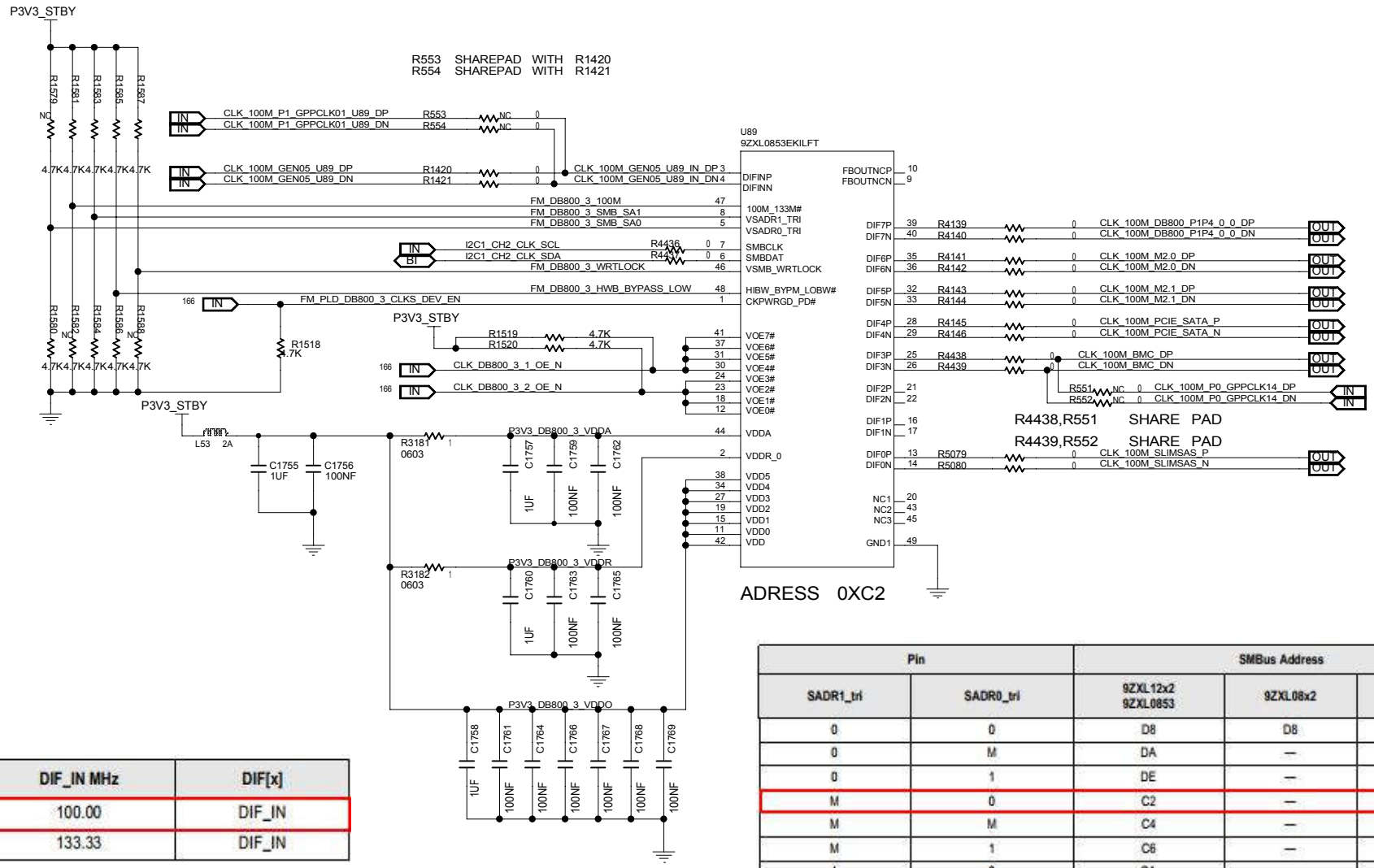

100M_133M#	DIF_IN MHz	DIF[x]
1	100.00	DIF_IN
0	133.33	DIF_IN

HiBW_BypM_LoBW#	Mode	PLL
Low	PLL Lo BW	Running
Mid	Bypass	Off
High	PLL Hi BW	Running

Pin		SMBus Address		
SADR1_tri	SADR0_tri	9ZXL12x2 9ZXL0853	9ZXL08x2	9ZXL06x2
0	0	D8	D8	D8
0	M	DA	—	—
0	1	DE	—	—
M	0	C2	—	—
M	M	C4	—	—
M	1	C6	—	—
1	0	CA	—	—
1	M	CC	—	—
1	1	CE	—	—

MODULE=---
FUNCTION=---

CNIT TECHNOLOGIES CO.,LTD.

BOARD NAME	BM-H14DSP_VERA	DRAWINGNO	CNIT0302K1D0DL
DESIGNED	ZHUHUI 00746	DATE 2024/10/22	SHEET 145 OF 276
REVIEWED	GUBIN 00260	DATE 2024/11/22	Thu Jan 02 20:34:29 2025

REV

THIS DOCUMENT AND THE TECHNICAL DATA DISCLOSED ARE PROPRIETARY TO CNIT TECHNOLOGIES CO., LTD. AND SHALL NOT BE DUPLICATED USED RELEASED OR DISCLOSED WITHOUT EXPRESSING WRITTEN PERMISSION.

MODULE=---
FUNCTION=---

CNIT TECHNOLOGIES CO.,LTD.				
BOARD NAME BM-H14DSP_VERA			DRAWINGNO CNIT0302K1D0DL	
DESIGNED	ZHUHUI 00746	DATE 2024/10/22	SHEET 146 OF 276	REV
REVIEWED	GUBIN 00260	DATE 2024/11/22	Wed Oct 23 15:01:40 2024	

THIS DOCUMENT AND THE TECHNICAL DATA DISCLOSED ARE PROPRIETARY TO CNIT TECHNOLOGIES CO., LTD. AND SHALL NOT BE DUPLICATED USED RELEASED OR DISCLOSED WITHOUT EXPRESSING WRITTEN PERMISSION.

JTAG & HDT

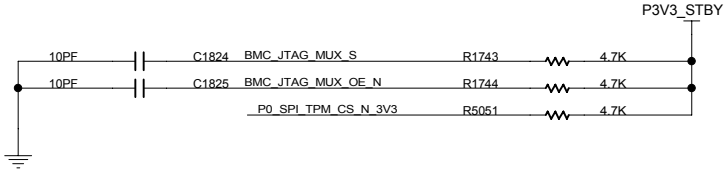

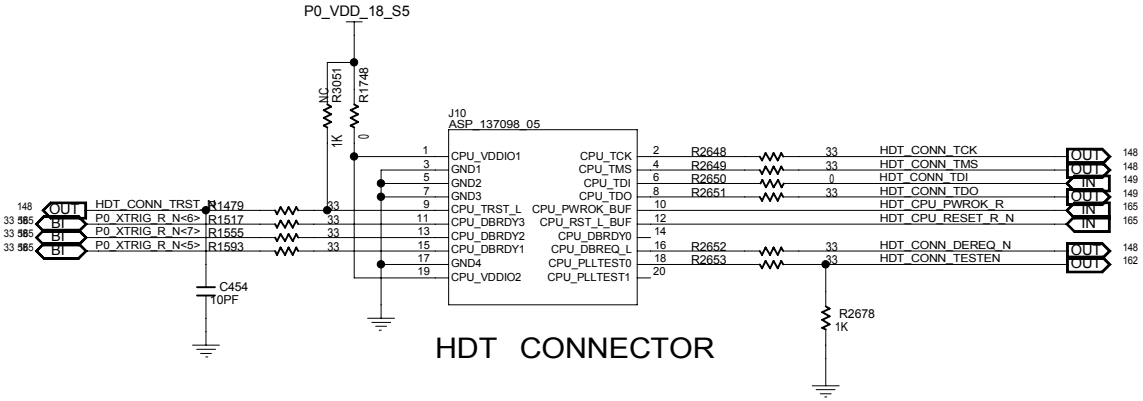

HDT CONNECTOR

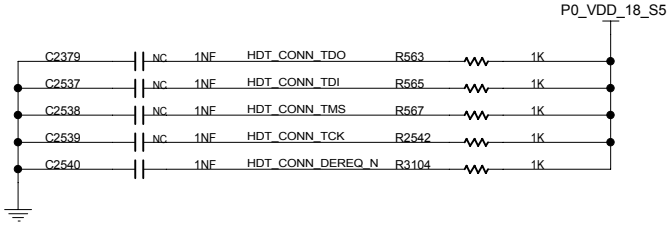

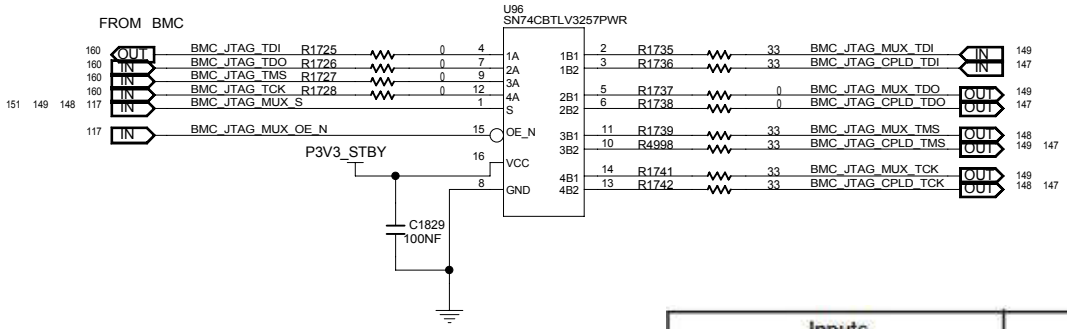

Inputs		Function
$\overline{OE}$	S	
L	L	A Port = B1 Port
L	H	A Port = B2 Port
H	X	Disconnect

MODULE=---

FUNCTION=---

CNIT TECHNOLOGIES CO.,LTD.				
BOARD NAME BM-H14DSP_VERA			DRAWINGNO CNIT0302K1D0DL	
DESIGNED	ZHUHUI 00746	DATE 2024/10/22	SHEET 147 OF 276	REV
REVIEWED	GUBIN 00260	DATE 2024/11/22	Thu Jan 02 20:34:33 2025	

THIS DOCUMENT AND THE TECHNICAL DATA DISCLOSED ARE PROPRIETARY TO CNIT TECHNOLOGIES CO., LTD. AND SHALL NOT BE DUPLICATED USED RELEASED OR DISCLOSED WITHOUT EXPRESSING WRITTEN PERMISSION.

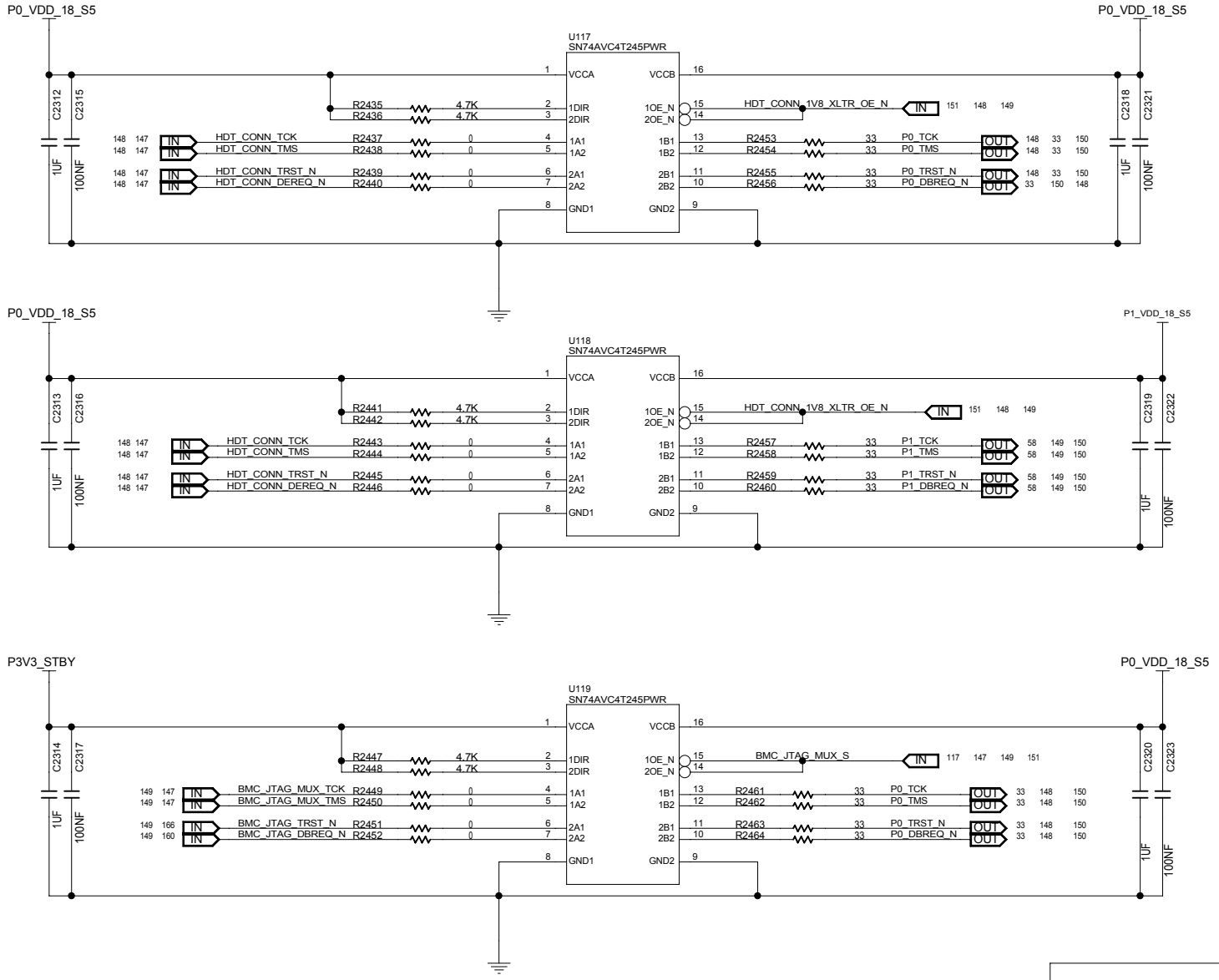

MODULE=---

FUNCTION=---

CNIT TECHNOLOGIES CO.,LTD.				
BOARD NAME BM-H14DSP_VERA			DRAWINGNO CNIT0302K1D0DL	
DESIGNED	ZHUHUI 00746	DATE 2024/10/22	SHEET 148 OF 276	REV
REVIEWED	GUBIN 00260	DATE 2024/11/22	Thu Jan 02 20:34:38 2025	

THIS DOCUMENT AND THE TECHNICAL DATA DISCLOSED ARE PROPRIETARY TO CNIT TECHNOLOGIES CO., LTD. AND SHALL NOT BE DUPLICATED USED RELEASED OR DISCLOSED WITHOUT EXPRESSING WRITTEN PERMISSION.

JTAG

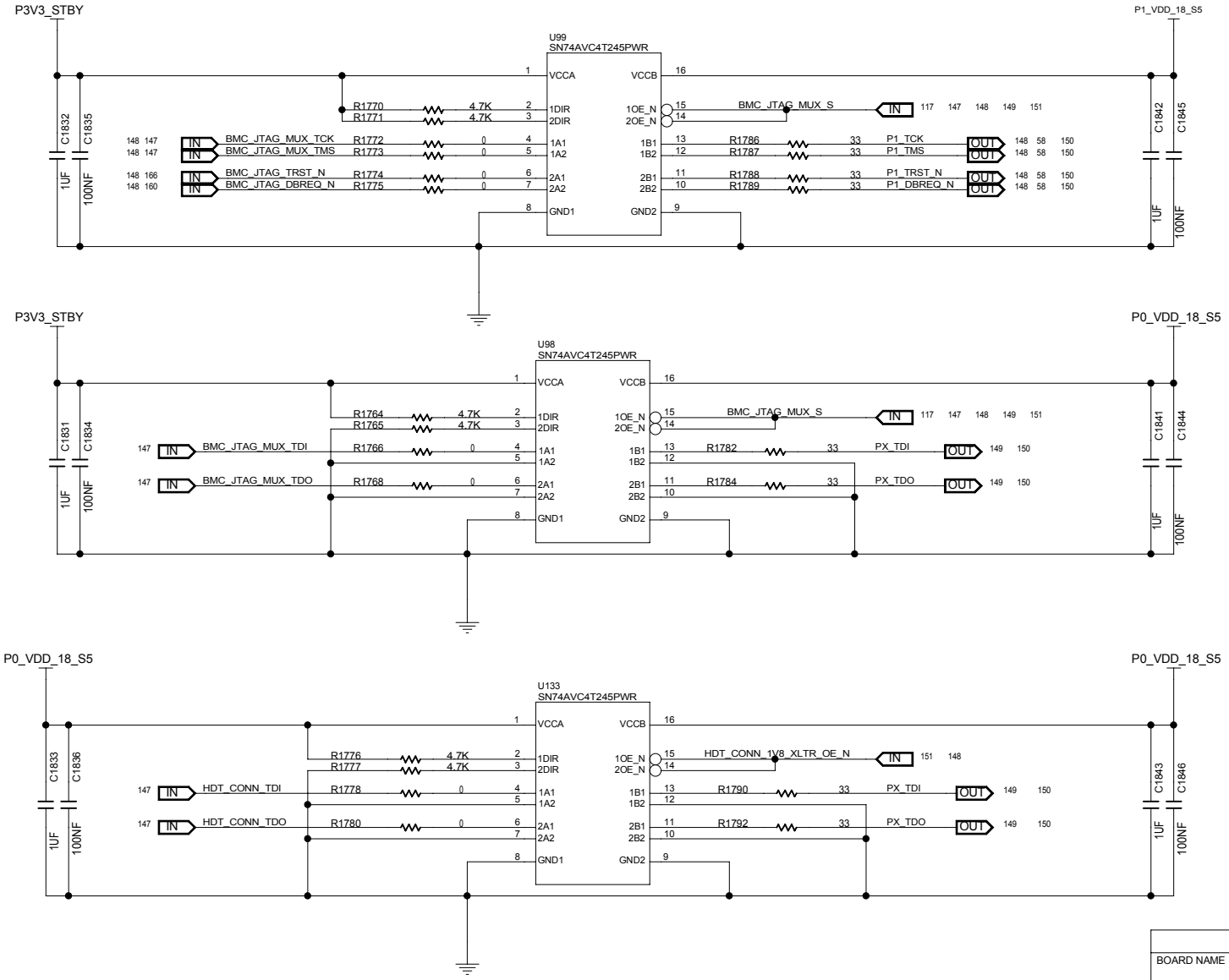

CONTROL INPUTS		OUTPUT CIRCUITS		OPERATION
$\overline{OE}$	DIR	A PORT	B PORT	
L	L	Enabled	Hi-Z	B data to A bus
L	H	Hi-Z	Enabled	A data to B bus
H	X	Hi-Z	Hi-Z	Isolation

MODULE=---

FUNCTION=---

CNIT TECHNOLOGIES CO.,LTD.				
BOARD NAME BM-H14DSP_VERA			DRAWINGNO CNIT0302K1D0DL	
DESIGNED	ZHUHUI 00746	DATE 2024/10/22	SHEET 149 OF 276	REV
REVIEWED	GUBIN 00260	DATE 2024/11/22	Thu Jan 02 20:34:43 2025	

THIS DOCUMENT AND THE TECHNICAL DATA DISCLOSED ARE PROPRIETARY TO CNIT TECHNOLOGIES CO., LTD. AND SHALL NOT BE DUPLICATED USED RELEASED OR DISCLOSED WITHOUT EXPRESSING WRITTEN PERMISSION.

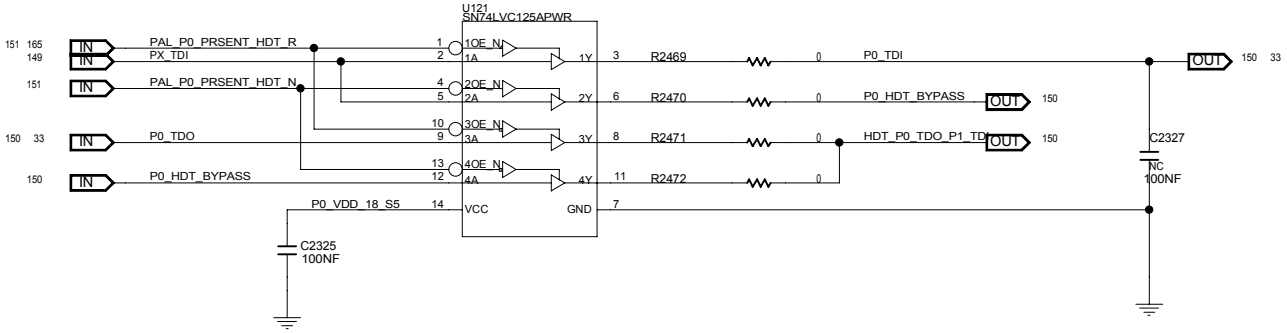

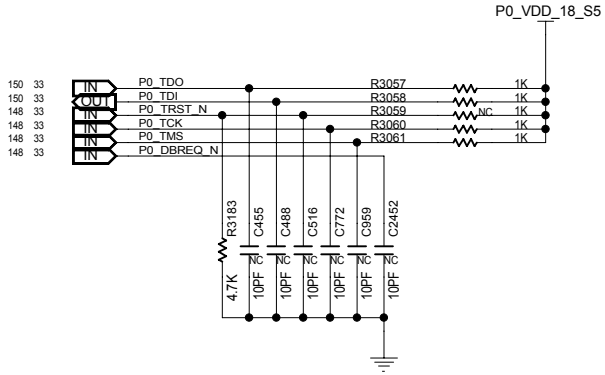

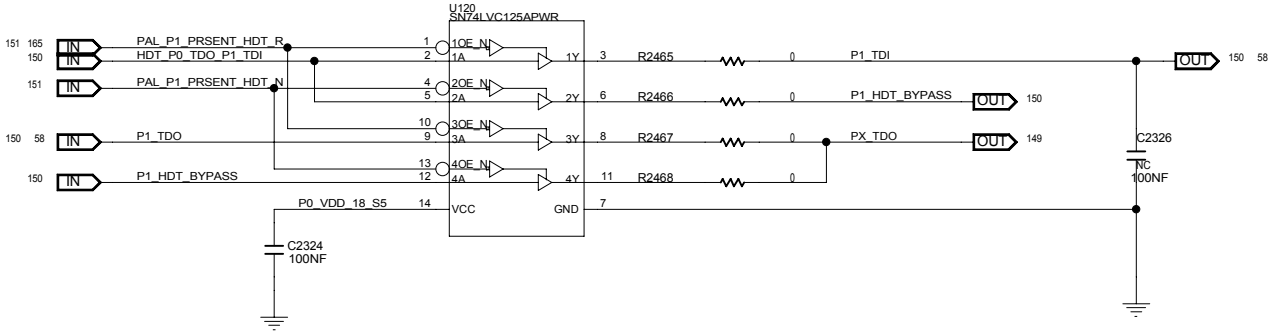

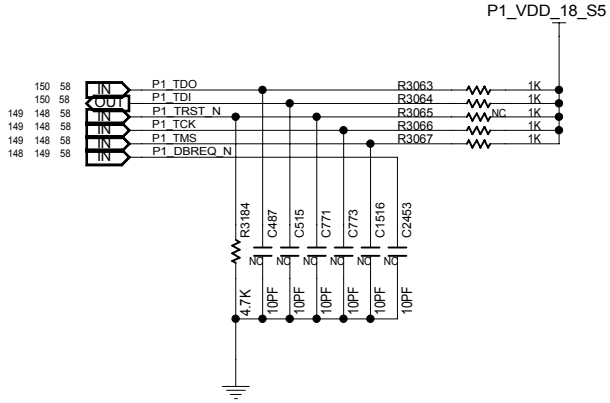

PAL_P0_PRSENT_HDT	PAL_P1_PRSENT_HDT	描述
0	1	PX_TDI -> P0_TDI PX_TDO <- P0_TDO
1	0	PX_TDI -> P1_TDI PX_TDO <- P1_TDO
0	0	PX_TDI -> P0_TDI P0_TDO -> P1_TDI PX_TDO <- P1_TDO

MODULE=---
FUNCTION=---

CNIT TECHNOLOGIES CO.,LTD.				
BOARD NAME BM-H14DSP_VERA			DRAWINGNO CNIT0302K1D0DL	
DESIGNED	ZHUHUI 00746	DATE 2024/10/22	SHEET 150 OF 276	REV
REVIEWED	GUBIN 00260	DATE 2024/11/22	Thu Jan 02 20:34:48 2025	

THIS DOCUMENT AND THE TECHNICAL DATA DISCLOSED ARE PROPRIETARY TO CNIT TECHNOLOGIES CO., LTD. AND SHALL NOT BE DUPLICATED USED RELEASED OR DISCLOSED WITHOUT EXPRESSING WRITTEN PERMISSION.

JTAG

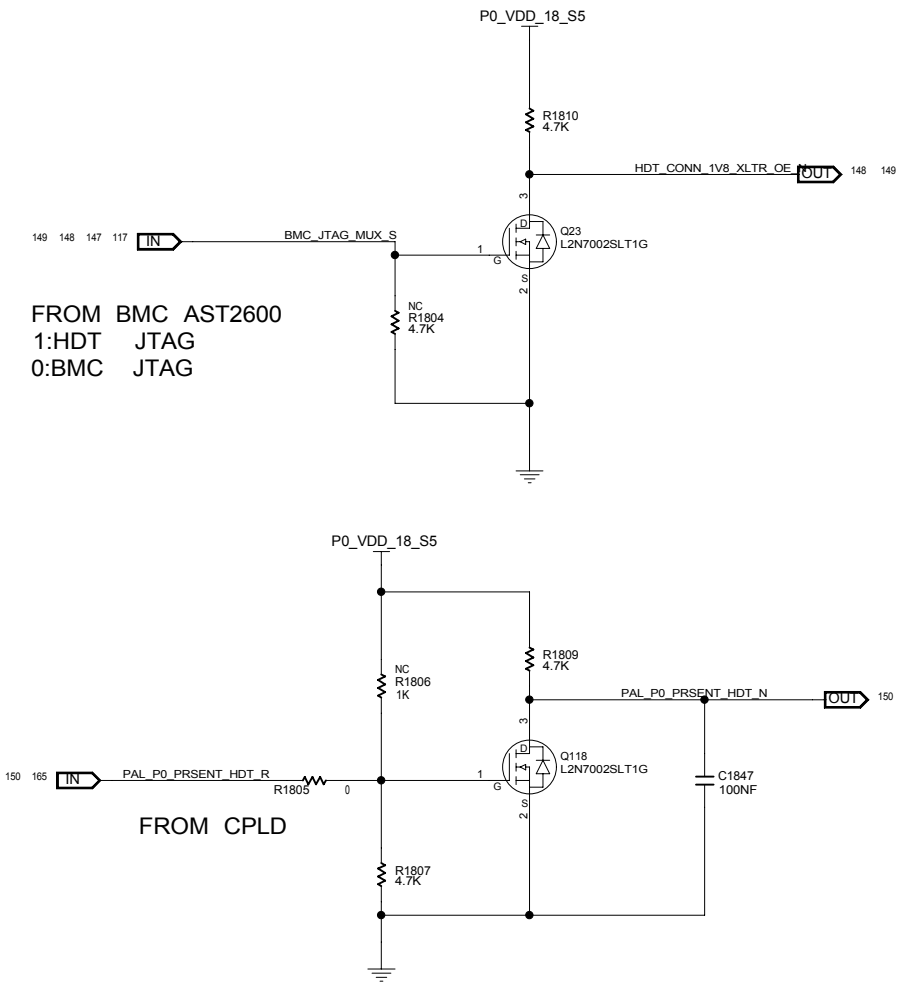

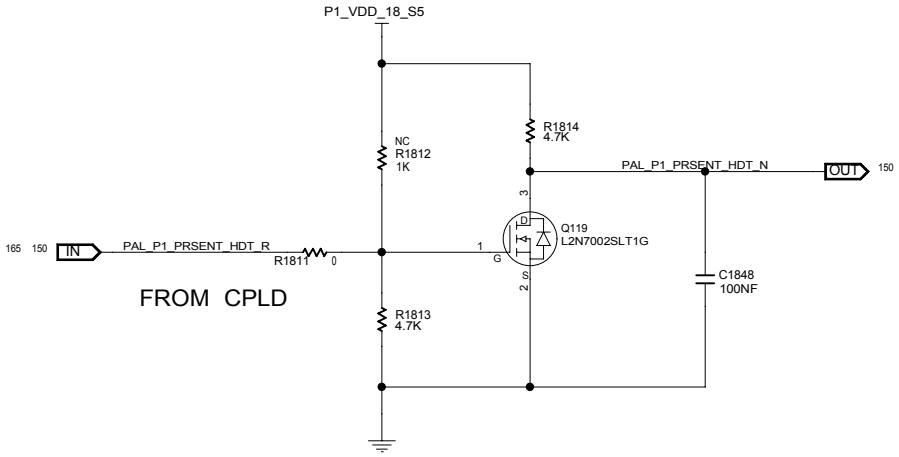

MODULE=---

FUNCTION=---

CNIT TECHNOLOGIES CO.,LTD.				
BOARD NAME BM-H14DSP_VERA			DRAWINGNO CNIT0302K1D0DL	
DESIGNED	ZHUHUI 00746	DATE 2024/10/22	SHEET 151 OF 276	REV
REVIEWED	GUBIN 00260	DATE 2024/11/22	Thu Jan 02 20:34:54 2025	

THIS DOCUMENT AND THE TECHNICAL DATA DISCLOSED ARE PROPRIETARY TO CNIT TECHNOLOGIES CO., LTD. AND SHALL NOT BE DUPLICATED USED RELEASED OR DISCLOSED WITHOUT EXPRESSING WRITTEN PERMISSION.

BOARD CONNECTOR

MODULE=---
FUNCTION=---

CNIT TECHNOLOGIES CO.,LTD.				
BOARD NAME BM-H14DSP_VERA			DRAWINGNO CNIT0302K1D0DL	
DESIGNED	ZHUHUI 00746	DATE 2024/10/22	SHEET 152 OF 276	REV
REVIEWED	GUBIN 00260	DATE 2024/11/22	Wed Oct 23 10:49:13 2024	

THIS DOCUMENT AND THE TECHNICAL DATA DISCLOSED ARE PROPRIETARY TO CNIT TECHNOLOGIES CO., LTD. AND SHALL NOT BE DUPLICATED USED RELEASED OR DISCLOSED WITHOUT EXPRESSING WRITTEN PERMISSION.

BOARD CONNECTOR

MODULE=---
FUNCTION=---

CNIT TECHNOLOGIES CO.,LTD.				
BOARD NAME BM-H14DSP_VERA			DRAWINGNO CNIT0302K1D0DL	
DESIGNED	ZHUHUI 00746	DATE 2024/10/22	SHEET 153 OF 276	REV
REVIEWED	GUBIN 00260	DATE 2024/11/22	Wed Oct 23 10:57:41 2024	

THIS DOCUMENT AND THE TECHNICAL DATA DISCLOSED ARE PROPRIETARY TO CNIT TECHNOLOGIES CO., LTD. AND SHALL NOT BE DUPLICATED USED RELEASED OR DISCLOSED WITHOUT EXPRESSING WRITTEN PERMISSION.

MODULE=---
FUNCTION=---

CNIT TECHNOLOGIES CO.,LTD.				
BOARD NAME BM-H14DSP_VERA			DRAWINGNO CNIT0302K1D0DL	
DESIGNED	ZHUHUI 00746	DATE 2024/10/22	SHEET 154 OF 276	REV
REVIEWED	GUBIN 00260	DATE 2024/11/22	Thu Oct 17 22:04:44 2024	

THIS DOCUMENT AND THE TECHNICAL DATA DISCLOSED ARE PROPRIETARY TO CNIT TECHNOLOGIES CO., LTD. AND SHALL NOT BE DUPLICATED USED RELEASED OR DISCLOSED WITHOUT EXPRESSING WRITTEN PERMISSION.

MODULE=---
FUNCTION=---

CNIT TECHNOLOGIES CO.,LTD.				
BOARD NAME BM-H14DSP_VERA			DRAWINGNO CNIT0302K1D0DL	
DESIGNED	ZHUHUI 00746	DATE 2024/10/22	SHEET 155 OF 276	REV
REVIEWED	GUBIN 00260	DATE 2024/11/22	Thu Oct 17 21:50:56 2024	

THIS DOCUMENT AND THE TECHNICAL DATA DISCLOSED ARE PROPRIETARY TO CNIT TECHNOLOGIES CO., LTD. AND SHALL NOT BE DUPLICATED USED RELEASED OR DISCLOSED WITHOUT EXPRESSING WRITTEN PERMISSION.

BOARD CONNECTOR

MODULE=---
FUNCTION=---

CNIT TECHNOLOGIES CO.,LTD.				
BOARD NAME BM-H14DSP_VERA			DRAWINGNO CNIT0302K1D0DL	
DESIGNED	ZHUHUI 00746	DATE 2024/10/22	SHEET 156 OF 276	REV
REVIEWED	GUBIN 00260	DATE 2024/11/22	Tue Oct 29 16:25:53 2024	

THIS DOCUMENT AND THE TECHNICAL DATA DISCLOSED ARE PROPRIETARY TO CNIT TECHNOLOGIES CO., LTD. AND SHALL NOT BE DUPLICATED USED RELEASED OR DISCLOSED WITHOUT EXPRESSING WRITTEN PERMISSION.

MODULE=---
FUNCTION=---

CNIT TECHNOLOGIES CO.,LTD.				
BOARD NAME BM-H14DSP_VERA			DRAWINGNO CNIT0302K1D0DL	
DESIGNED	ZHUHUI 00746	DATE 2024/10/22	SHEET 157 OF 276	REV
REVIEWED	GUBIN 00260	DATE 2024/11/22	Wed Oct 23 21:29:43 2024	

THIS DOCUMENT AND THE TECHNICAL DATA DISCLOSED ARE PROPRIETARY TO CNIT TECHNOLOGIES CO., LTD. AND SHALL NOT BE DUPLICATED USED RELEASED OR DISCLOSED WITHOUT EXPRESSING WRITTEN PERMISSION.

BOARD CONNECTOR

MODULE=---
FUNCTION=---

CNIT TECHNOLOGIES CO.,LTD.				
BOARD NAME BM-H14DSP_VERA			DRAWINGNO CNIT0302K1D0DL	
DESIGNED	ZHUHUI 00746	DATE 2024/10/22	SHEET 158 OF 276	REV
REVIEWED	GUBIN 00260	DATE 2024/11/22	Wed Oct 23 21:14:15 2024	

THIS DOCUMENT AND THE TECHNICAL DATA DISCLOSED ARE PROPRIETARY TO CNIT TECHNOLOGIES CO., LTD. AND SHALL NOT BE DUPLICATED USED RELEASED OR DISCLOSED WITHOUT EXPRESSING WRITTEN PERMISSION.

USB20_SW

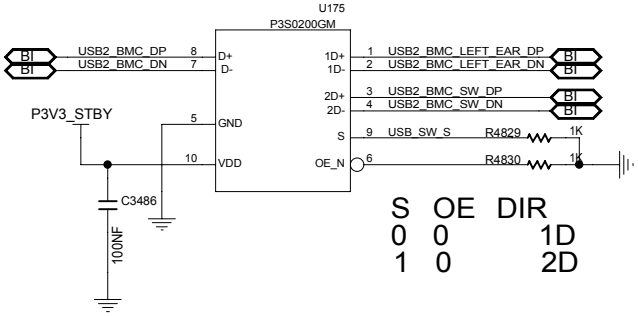

S	OE	DIR
0	0	1D
1	0	2D

MODULE=---

FUNCTION=---

CNIT TECHNOLOGIES CO.,LTD.				
BOARD NAME BM-H14DSP_VERA			DRAWINGNO CNIT0302K1D0DL	
DESIGNED	ZHUHUI 00746	DATE 2024/10/22	SHEET 159 OF 276	REV
REVIEWED	GUBIN 00260	DATE 2024/11/22	Thu Jan 02 20:34:58 2025	

THIS DOCUMENT AND THE TECHNICAL DATA DISCLOSED ARE PROPRIETARY TO CNIT TECHNOLOGIES CO., LTD. AND SHALL NOT BE DUPLICATED USED RELEASED OR DISCLOSED WITHOUT EXPRESSING WRITTEN PERMISSION.

CMU_GENZ-4C+

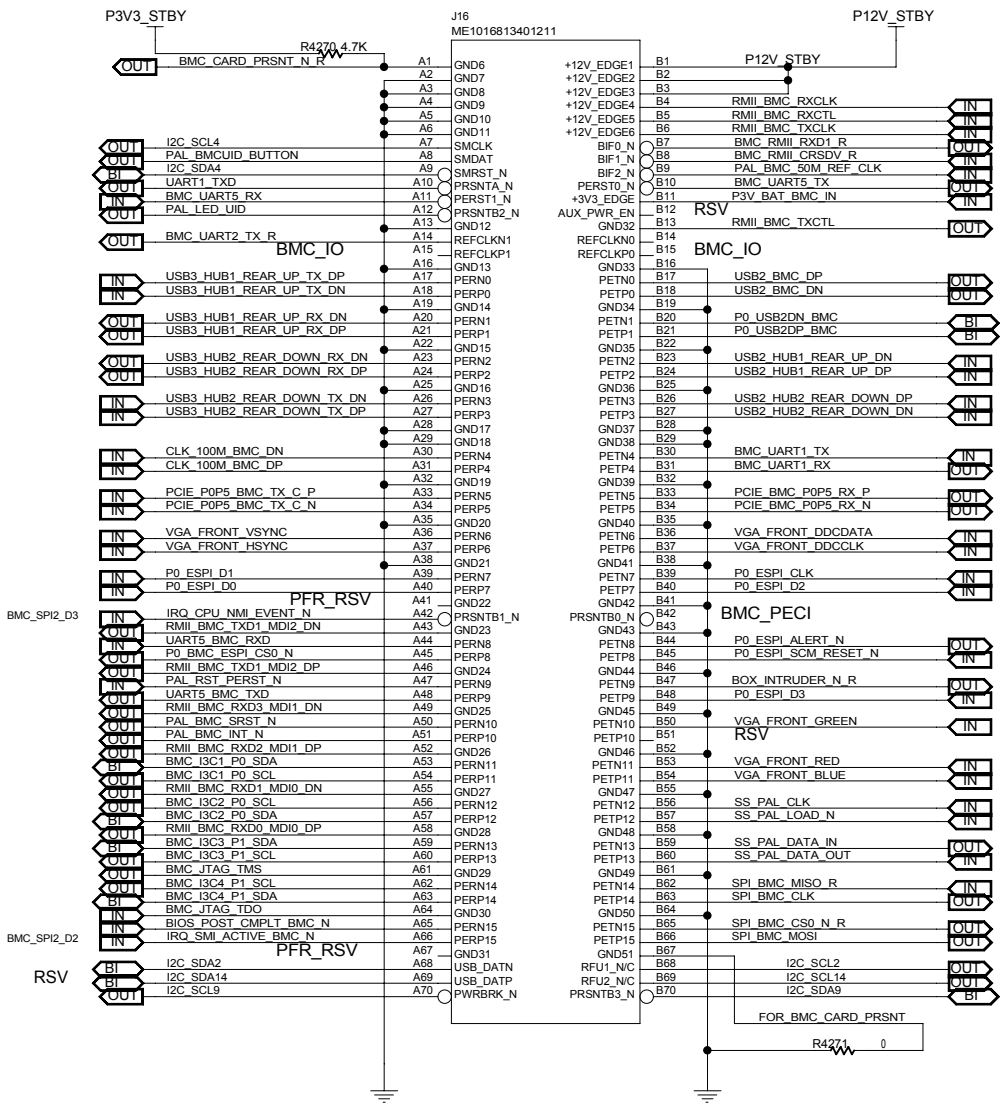

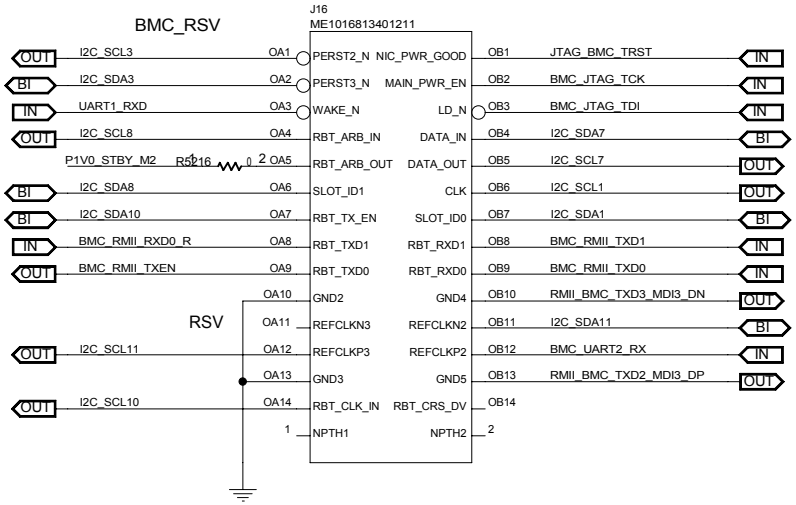

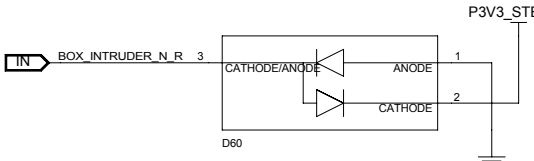

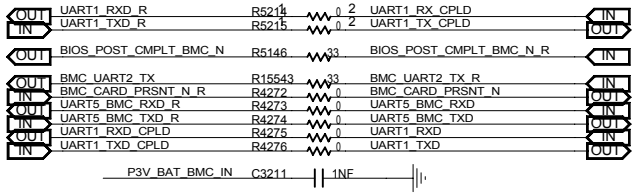

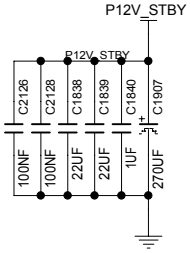

MODULE=---

FUNCTION=---

CNIT TECHNOLOGIES CO.,LTD.				
BOARD NAME BM-H14DSP_VERA			DRAWINGNO CNIT0302K1D0DL	
DESIGNED	ZHUHUI 00746	DATE 2024/10/22	SHEET 160 OF 276	REV
REVIEWED	GUBIN 00260	DATE 2024/11/22	Wed Jan 08 21:06:52 2025	

THIS DOCUMENT AND THE TECHNICAL DATA DISCLOSED ARE PROPRIETARY TO CNIT TECHNOLOGIES CO., LTD. AND SHALL NOT BE DUPLICATED USED RELEASED OR DISCLOSED WITHOUT EXPRESSING WRITTEN PERMISSION.

SHAREPAD

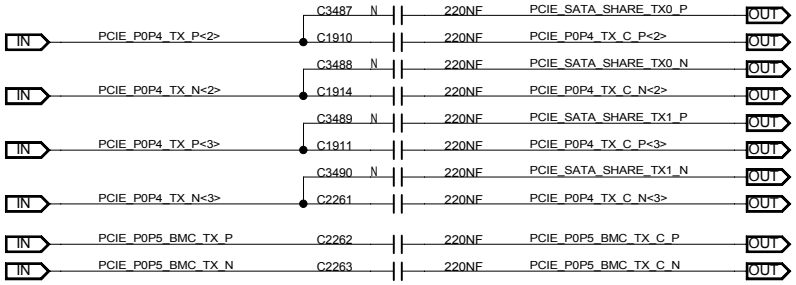

MODULE=---
FUNCTION=---

CNIT TECHNOLOGIES CO.,LTD.				
BOARD NAME BM-H14DSP_VERA			DRAWINGNO CNIT0302K1D0DL	
DESIGNED	ZHUHUI 00746	DATE 2024/10/22	SHEET 161 OF 276	REV
REVIEWED	GUBIN 00260	DATE 2024/11/22	Sun Dec 22 16:07:58 2024	

THIS DOCUMENT AND THE TECHNICAL DATA DISCLOSED ARE PROPRIETARY TO CNIT TECHNOLOGIES CO., LTD. AND SHALL NOT BE DUPLICATED USED RELEASED OR DISCLOSED WITHOUT EXPRESSING WRITTEN PERMISSION.

CPLD_1

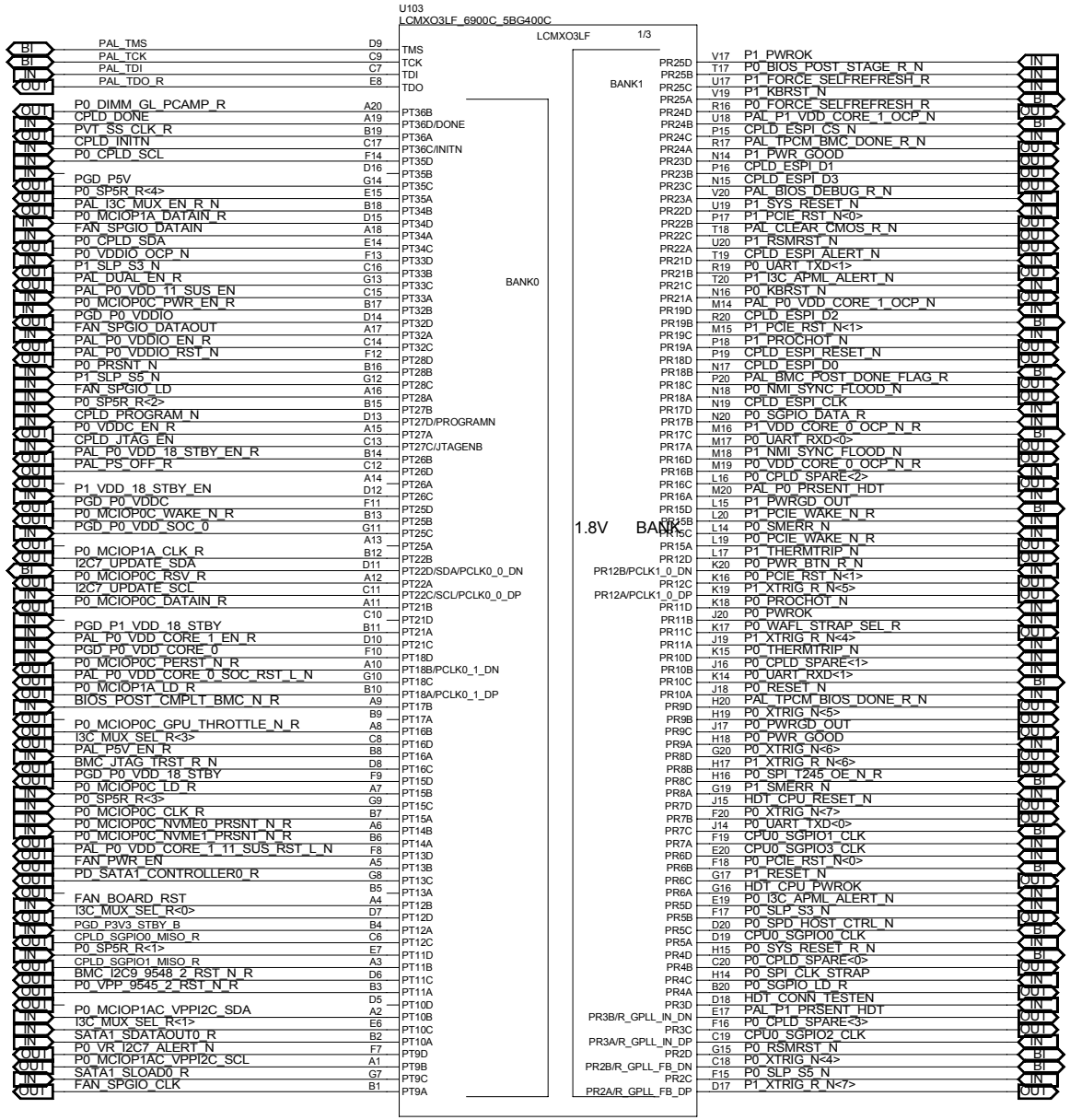

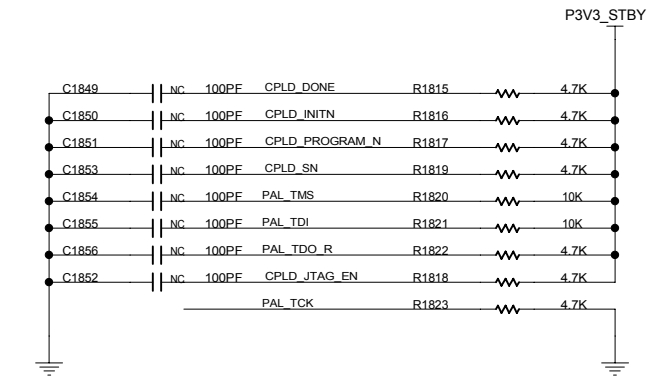

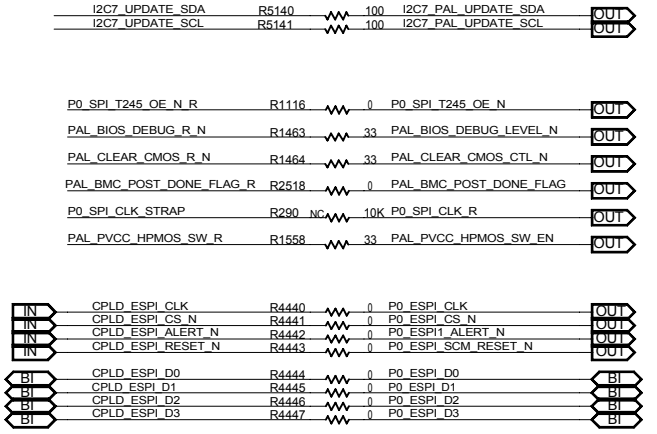

MODULE=---

FUNCTION=---

CNIT TECHNOLOGIES CO.,LTD.				
BOARD NAME BM-H14DSP_VERA			DRAWINGNO CNIT0302K1D0DL	
DESIGNED	ZHUHUI 00746	DATE 2024/10/22	SHEET 162 OF 276	REV
REVIEWED	GUBIN 00260	DATE 2024/11/22	Sat Dec 28 11:55:10 2024	

THIS DOCUMENT AND THE TECHNICAL DATA DISCLOSED ARE PROPRIETARY TO CNIT TECHNOLOGIES CO., LTD. AND SHALL NOT BE DUPLICATED USED RELEASED OR DISCLOSED WITHOUT EXPRESSING WRITTEN PERMISSION.

CPLD_2

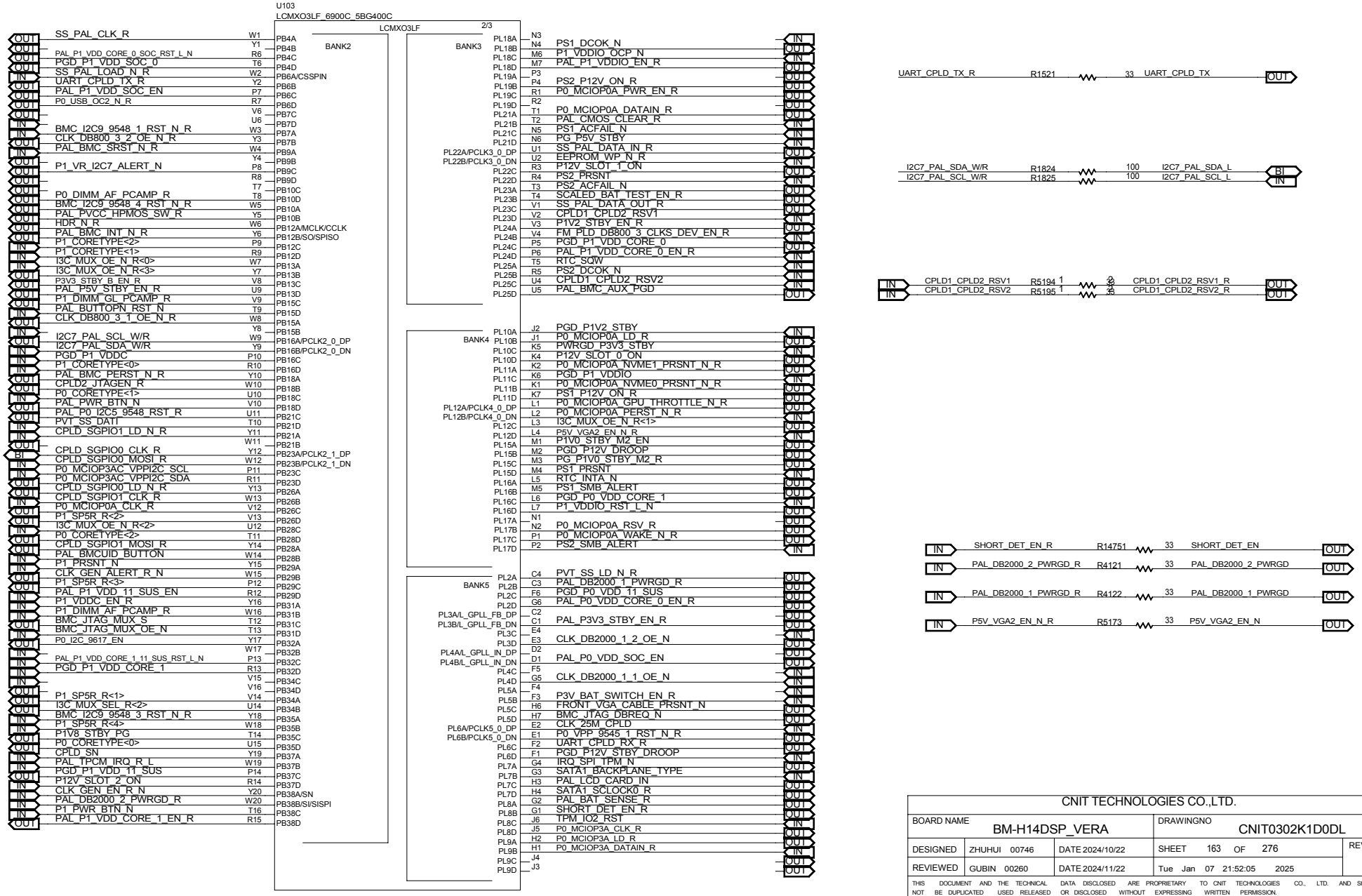

MODULE=---

FUNCTION=---

CNIT TECHNOLOGIES CO.,LTD.				
BOARD NAME BM-H14DSP_VERA			DRAWINGNO CNIT0302K1D0DL	
DESIGNED	ZHUHUI 00746	DATE 2024/10/22	SHEET 163 OF 276	REV
REVIEWED	GUBIN 00260	DATE 2024/11/22	Tue Jan 07 21:52:05 2025	

THIS DOCUMENT AND THE TECHNICAL DATA DISCLOSED ARE PROPRIETARY TO CNIT TECHNOLOGIES CO., LTD. AND SHALL NOT BE DUPLICATED USED RELEASED OR DISCLOSED WITHOUT EXPRESSING WRITTEN PERMISSION.

CPLD_3

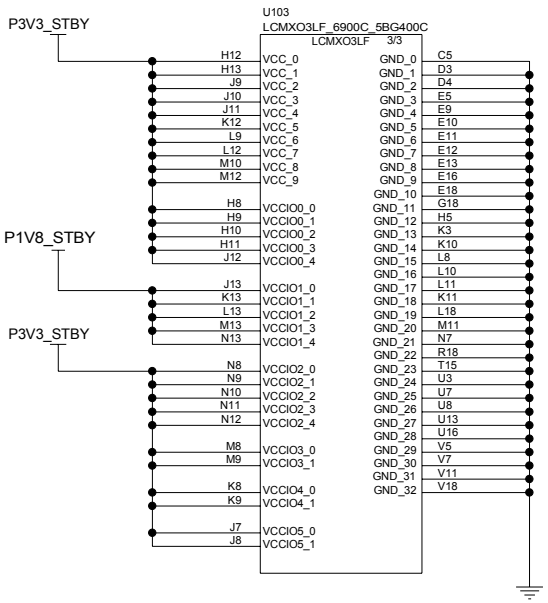

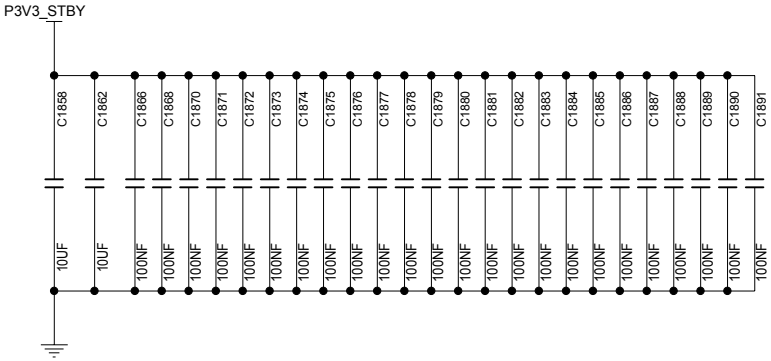

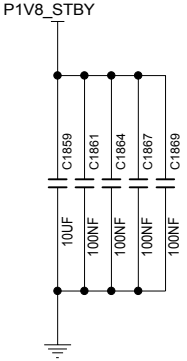

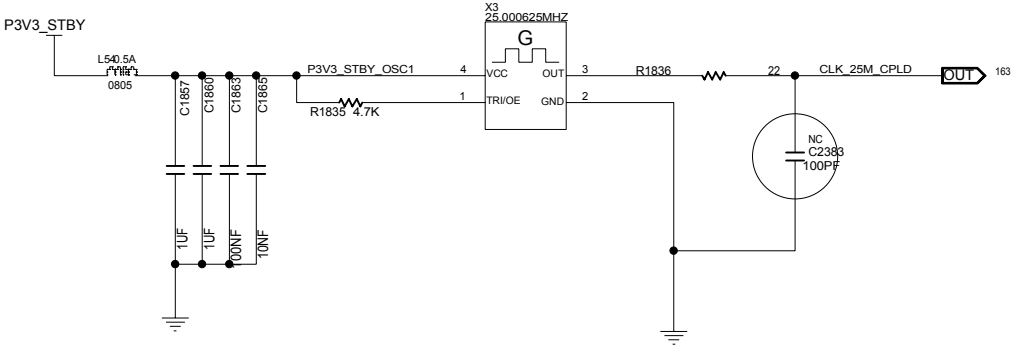

MODULE=---

FUNCTION=---

CNIT TECHNOLOGIES CO.,LTD.				
BOARD NAME BM-H14DSP_VERA			DRAWINGNO CNIT0302K1D0DL	
DESIGNED	ZHUHUI 00746	DATE 2024/10/22	SHEET 164 OF 276	REV
REVIEWED	GUBIN 00260	DATE 2024/11/22	Thu Jan 02 20:35:13 2025	

THIS DOCUMENT AND THE TECHNICAL DATA DISCLOSED ARE PROPRIETARY TO CNIT TECHNOLOGIES CO., LTD. AND SHALL NOT BE DUPLICATED USED RELEASED OR DISCLOSED WITHOUT EXPRESSING WRITTEN PERMISSION.

162	IN	PAL_P0_PRSENT_HDT	R2507	33	PAL_P0_PRSENT_HDT_R	OUT	150	151			
162	IN	PAL_P1_PRSENT_HDT	R2508	33	PAL_P1_PRSENT_HDT_R	OUT	150	151			
162	IN	P0_KBRST_N	R2473	33	P0_KBRST_R_N	OUT	31				
162	OUT	P0_SLP_S5_N	R2474	33	P0_SLP_S5_R_N	IN	32				
162	OUT	P0_SLP_S3_N	R2475	33	P0_SLP_S3_R_N	IN	32				
32 162	IN	P0_PWR_BTN_R_N	R2476	33	P0_PWR_BTN_N	OUT	32				
162	IN	P0_SYS_RESET_R_N	R2477	33	P0_SYS_RESET_N	OUT	34	32			
162	IN	P0_RSMRST_N	R3223	33	P0_RSMRST_R_N	OUT	32				
162	IN	P0_PWR_GOOD	R3224	33	P0_PWR_GOOD_R	OUT	32				
162	IN	P0_NMI_SYNC_FLOOD_N	R3225	33	P0_NMI_SYNC_FLOOD_R_N	OUT	32	33			
162	OUT	P0_SMERR_N	R3226	33	P0_SMERR_R_N	IN	32				
162	OUT	P0_RESET_N	R3227	33	P0_RESET_R_N	IN	32				
162	OUT	P0_PWROK	R3228	33	P0_PWROK_R	IN	32				
32 162	OUT	P0_PWRGD_OUT	R3229	33	P0_PWRGD_OUT_R	IN	32				
162	OUT	P0_PCIE_RST_N<0>	R2487	33	P0_PCIE_RST_R_N<0>	IN	32				
162	OUT	P0_PCIE_RST_N<1>	R2488	33	P0_PCIE_RST_R_N<1>	IN	32				
162	OUT	P0_PRSNT_N	R2489	33	P0_PRSNT_R_N	IN	33				
162	OUT	P0_SP5R_R<1>	R2490	33	P0_SP5R<1>	IN	33				
162	OUT	P0_SP5R_R<2>	R2491	33	P0_SP5R<2>	IN	33				
162	OUT	P0_SP5R_R<3>	R2492	33	P0_SP5R<3>	IN	33				
162	OUT	P0_SP5R_R<4>	R3230	33	P0_SP5R<4>	IN	33				
162	OUT	P0_I3C_APML_ALERT_N	R3231	33	P0_I3C_APML_ALERT_R_N	IN	33				
162	IN	P0_PROCHOT_N	R3232	33	P0_PROCHOT_R_N	OUT	33				
162	OUT	P0_THERMTRIP_N	R3233	33	P0_THERMTRIP_R_N	IN	33				
162	BI	P0_XTRIG_N<4>	R3234	33	P0_XTRIG_R_N<4>	BI	33	58			
162	BI	P0_XTRIG_N<5>	R3235	33	P0_XTRIG_R_N<5>	BI	33	58	147		
162	BI	P0_XTRIG_N<6>	R3236	33	P0_XTRIG_R_N<6>	BI	33	58	147		
162	BI	P0_XTRIG_N<7>	R3237	33	P0_XTRIG_R_N<7>	BI	33	58	147		
162	IN	PAL_TPCM_BIOS_DONE_R_N	R3238	33	PAL_TPCM_BIOS_DONE_N	OUT	33				
162	IN	PAL_TPCM_BMC_DONE_R_N	R2503	33	PAL_TPCM_BMC_DONE_N	OUT	33				
162	OUT	P0_UART_TXD<0>	R2504	33	P0_UART_R_TXD<0>	IN	33				
162	IN	P0_UART_RXD<0>	R2505	33	P0_UART_R_RXD<0>	OUT	33				
162	IN					OUT	160				
163	IN					OUT	160				
162	IN	P0_PCIE_WAKE_N_R	R2654	33	P0_PCIE_WAKE_N	OUT	32				
162	IN	P1_PCIE_WAKE_N_R	R3405	33	P1_PCIE_WAKE_N	OUT	32	57			
	IN	HDR_N	R4454	33	HDR_N_R	OUT					

162	IN	P1_KBRST_N	R3239	33	P1_KBRST_R_N	OUT	56				
162	IN	P1_SYS_RESET_N	R2513	33	P1_SYS_RESET_R_N	OUT	57				
162	IN	P1_RSMRST_N	R2514	33	P1_RSMRST_R_N	OUT	57				
162	IN	P1_PWR_GOOD	R2515	33	P1_PWR_GOOD_R	OUT	57				
162	IN	P1_NMI_SYNC_FLOOD_N	R3241	33	P1_NMI_SYNC_FLOOD_R_N	OUT	57	58			
162	OUT	P1_SMERR_N	R3242	33	P1_SMERR_R_N	IN	57				
162	OUT	P1_RESET_N	R3243	33	P1_RESET_R_N	IN	32	57			
162	OUT	P1_PWROK	R3244	33	P1_PWROK_R	IN	32	57			
57 162	OUT	P1_PWRGD_OUT	R3245	33	P1_PWRGD_OUT_R	IN	57				
162	OUT	P1_PCIE_RST_N<0>	R3246	33	P1_PCIE_RST_R_N<0>	IN	57				
162	OUT	P1_PCIE_RST_N<1>	R3247	33	P1_PCIE_RST_R_N<1>	IN	57				
163	OUT	P1_PRSNT_N	R3248	33	P1_PRSNT_R_N	IN	58				
163	OUT	P1_SP5R_R<1>	R5006	33	P1_SP5R<1>	IN	58				
163	OUT	P1_SP5R_R<2>	R5007	33	P1_SP5R<2>	IN	58				
163	OUT	P1_SP5R_R<3>	R5008	33	P1_SP5R<3>	IN	58				
163	OUT	P1_SP5R_R<4>	R3209	33	P1_SP5R<4>	IN	58				
162	OUT	P1_I3C_APML_ALERT_N	R3210	33	P1_I3C_APML_ALERT_R_N	IN	58				
162	IN	P1_PROCHOT_N	R3211	33	P1_PROCHOT_R_N	OUT	58				
162	OUT	P1_THERMTRIP_N	R3297	33	P1_THERMTRIP_R_N	IN	58				
162	OUT	P0_UART_TXD<1>	R2540	33	P0_UART_R_TXD<1>	IN	33	34			
162	IN	P0_UART_RXD<1>	R2541	33	P0_UART_R_RXD<1>	OUT	33				
162	IN	P0_WAFL_STRAP_SEL_R	R3249	33	P0_ESPI_CLK2_STRAP	OUT	34	31			
163	IN					OUT	107				
162	IN	HDT_CPU_PWROK	R3144	33	HDT_CPU_PWROK_R	OUT	147				
162	IN	HDT_CPU_RESET_N	R3145	33	HDT_CPU_RESET_R_N	OUT	147				
	IN	PAL_BMC_INT_N_R	R4277	22	PAL_BMC_INT_N	OUT					
	IN	PAL_BMC_PERST_N_R	R12082	33	PAL_RST_PERST_N	OUT					
	IN	PAL_BMC_SRST_N_R	R12080	33	PAL_BMC_SRST_N	OUT					
	OUT	SS_PAL_CLK_R	R3459	33	SS_PAL_CLK	IN					
	OUT	SS_PAL_LOAD_N_R	R3460	33	SS_PAL_LOAD_N	IN					
	IN	SS_PAL_DATA_IN_R	R3461	33	SS_PAL_DATA_IN	OUT					
	OUT	SS_PAL_DATA_OUT_R	R3462	33	SS_PAL_DATA_OUT	IN					

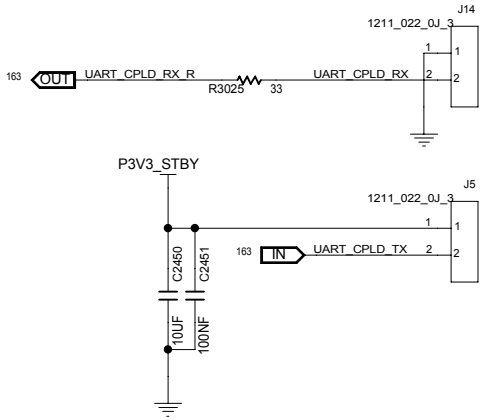

MODULE=---

FUNCTION=---

CNIT TECHNOLOGIES CO.,LTD.				
BOARD NAME BM-H14DSP_VERA			DRAWINGNO CNIT0302K1D0DL	
DESIGNED	ZHUHUI 00746	DATE 2024/10/22	SHEET 165 OF 276	REV
REVIEWED	GUBIN 00260	DATE 2024/11/22	Thu Jan 02 20:35:18 2025	

THIS DOCUMENT AND THE TECHNICAL DATA DISCLOSED ARE PROPRIETARY TO CNIT TECHNOLOGIES CO., LTD. AND SHALL NOT BE DUPLICATED USED RELEASED OR DISCLOSED WITHOUT EXPRESSING WRITTEN PERMISSION.

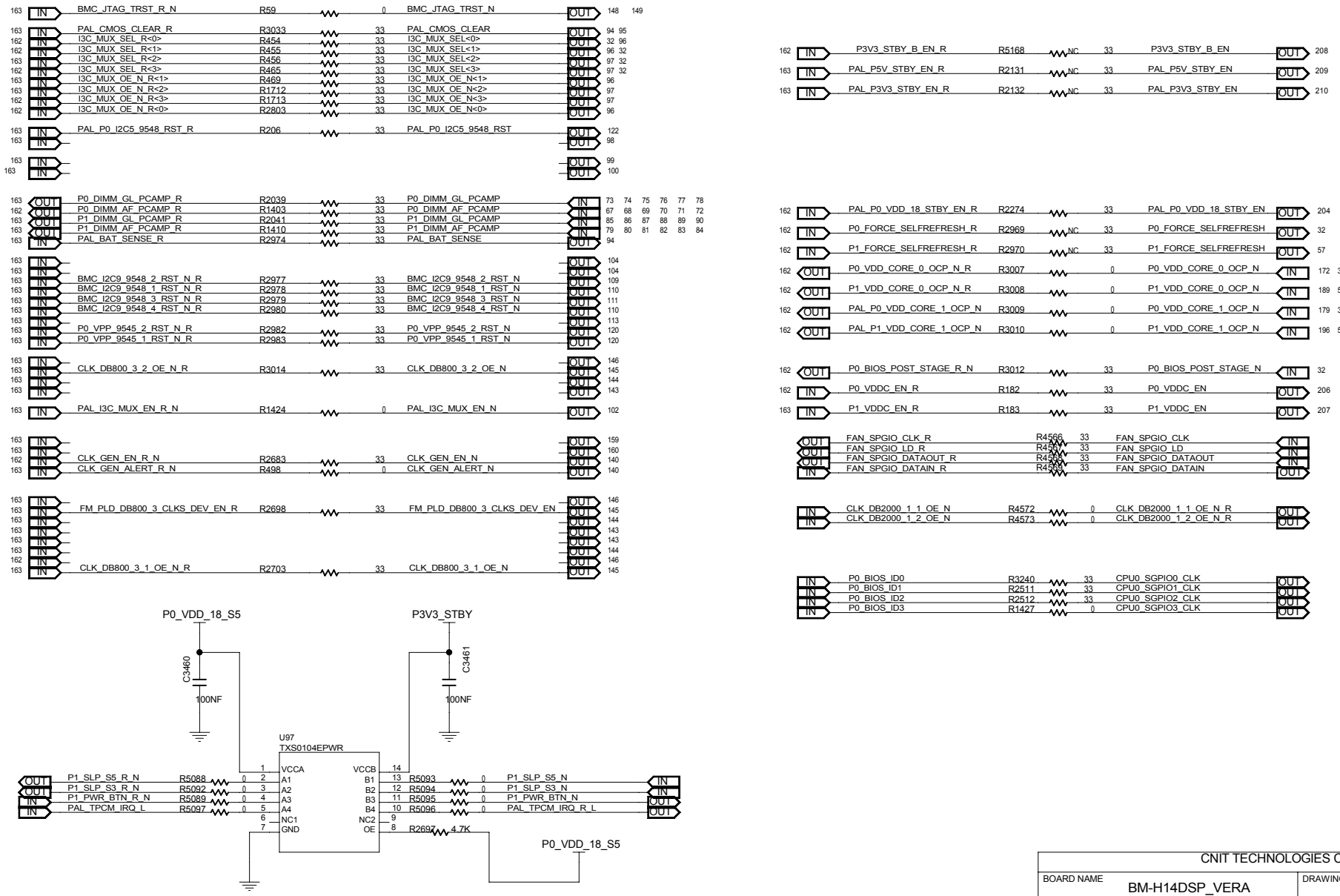

MODULE=---

FUNCTION=---

CNIT TECHNOLOGIES CO.,LTD.				
BOARD NAME BM-H14DSP_VERA			DRAWINGNO CNIT0302K1D0DL	
DESIGNED	ZHUHUI 00746	DATE 2024/10/22	SHEET 166 OF 276	REV
REVIEWED	GUBIN 00260	DATE 2024/11/22	Thu Jan 02 20:35:22 2025	

THIS DOCUMENT AND THE TECHNICAL DATA DISCLOSED ARE PROPRIETARY TO CNIT TECHNOLOGIES CO., LTD. AND SHALL NOT BE DUPLICATED USED RELEASED OR DISCLOSED WITHOUT EXPRESSING WRITTEN PERMISSION.

BOARD ID

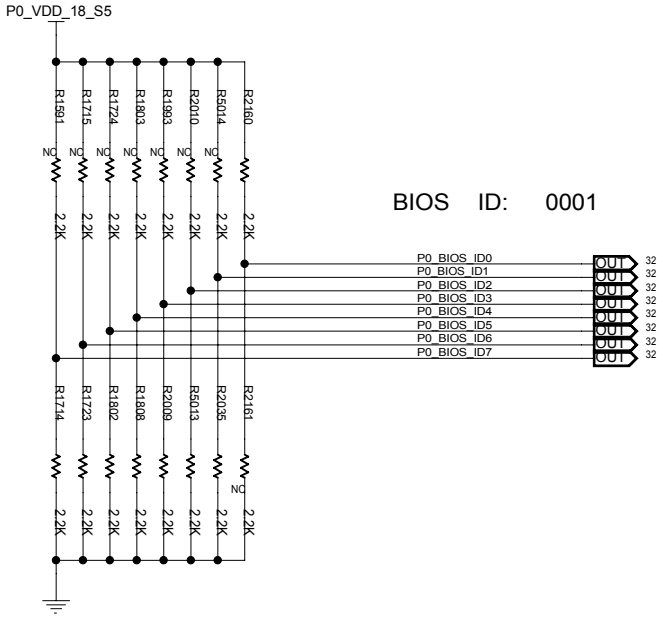

BIOS ID: 0001

VENDOR ID 0X08: 0000_1000
VENDOR ID[7:0]: FIXED BY CPLD CODE

PLATFORM ID 0X00: INTEL
PLATFORM ID 0X01: AMD
PLATFORM ID 0X02: M
PLATFORM ID 0X03: BOX
PLATFORM ID[7:0]: FIXED BY CPLD CODE

MODULE=---
FUNCTION=---

CNIT TECHNOLOGIES CO.,LTD.				
BOARD NAME BM-H14DSP_VERA			DRAWINGNO CNIT0302K1D0DL	
DESIGNED	ZHUHUI 00746	DATE 2024/10/22	SHEET 167 OF 276	REV
REVIEWED	GUBIN 00260	DATE 2024/11/22	Fri Dec 27 11:49:34 2024	

THIS DOCUMENT AND THE TECHNICAL DATA DISCLOSED ARE PROPRIETARY TO CNIT TECHNOLOGIES CO., LTD. AND SHALL NOT BE DUPLICATED USED RELEASED OR DISCLOSED WITHOUT EXPRESSING WRITTEN PERMISSION.

ADC

EVT VC CHANGE BY W00209, CHANGE ADC FORM ADS7828 TO ADC128D818

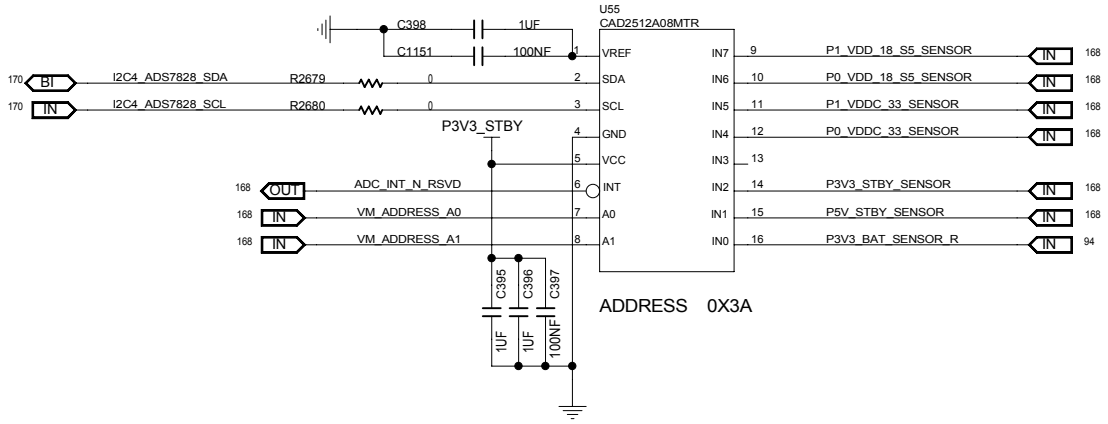

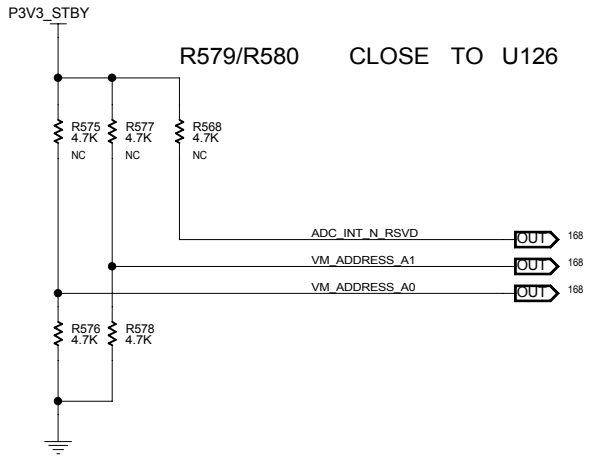

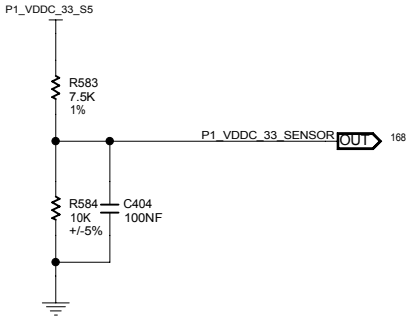

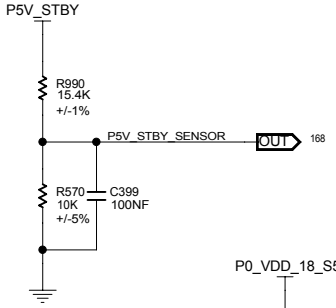

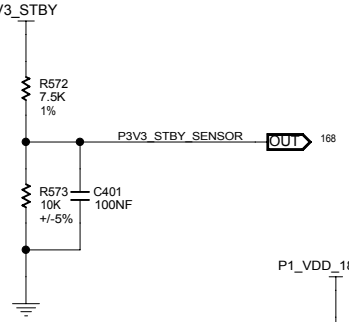

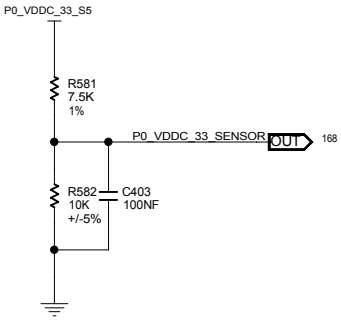

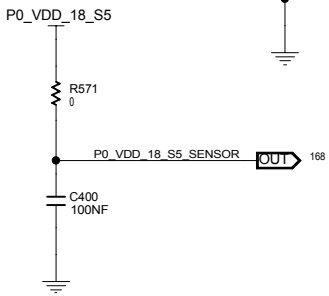

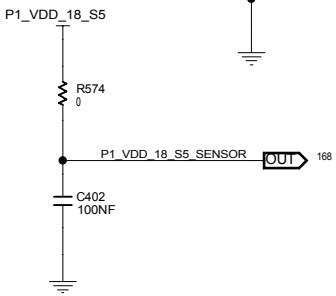

MODULE=---
FUNCTION=---

CNIT TECHNOLOGIES CO.,LTD.				
BOARD NAME BM-H14DSP_VERA			DRAWINGNO CNIT0302K1D0DL	
DESIGNED	ZHUHUI 00746	DATE 2024/10/22	SHEET 168 OF 276	REV
REVIEWED	GUBIN 00260	DATE 2024/11/22	Thu Jan 02 20:35:27 2025	

THIS DOCUMENT AND THE TECHNICAL DATA DISCLOSED ARE PROPRIETARY TO CNIT TECHNOLOGIES CO., LTD. AND SHALL NOT BE DUPLICATED USED RELEASED OR DISCLOSED WITHOUT EXPRESSING WRITTEN PERMISSION.

TEMP SENSORS

MODULE=---
FUNCTION=---

CNIT TECHNOLOGIES CO.,LTD.				
BOARD NAME BM-H14DSP_VERA			DRAWINGNO CNIT0302K1D0DL	
DESIGNED	ZHUHUI 00746	DATE 2024/10/22	SHEET 169 OF 276	REV
REVIEWED	GUBIN 00260	DATE 2024/11/22	Tue Oct 29 11:11:40 2024	

THIS DOCUMENT AND THE TECHNICAL DATA DISCLOSED ARE PROPRIETARY TO CNIT TECHNOLOGIES CO., LTD. AND SHALL NOT BE DUPLICATED USED RELEASED OR DISCLOSED WITHOUT EXPRESSING WRITTEN PERMISSION.

EEPROM

MODULE=---
FUNCTION=---

CNIT TECHNOLOGIES CO.,LTD.				
BOARD NAME BM-H14DSP_VERA			DRAWINGNO CNIT0302K1D0DL	
DESIGNED	ZHUHUI 00746	DATE 2024/10/22	SHEET 170 OF 276	REV
REVIEWED	GUBIN 00260	DATE 2024/11/22	Tue Oct 29 11:22:31 2024	

THIS DOCUMENT AND THE TECHNICAL DATA DISCLOSED ARE PROPRIETARY TO CNIT TECHNOLOGIES CO., LTD. AND SHALL NOT BE DUPLICATED USED RELEASED OR DISCLOSED WITHOUT EXPRESSING WRITTEN PERMISSION.

EVT VC CHANGE BY W00209,ADD R1358/R1360 , DELETE INA3221

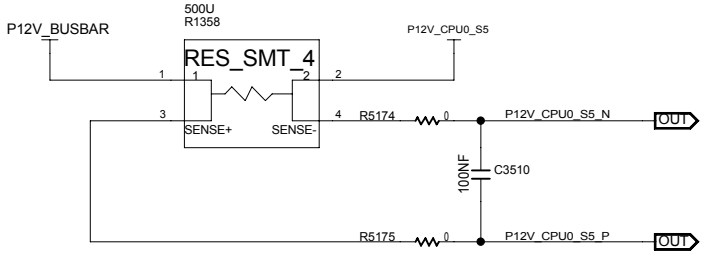

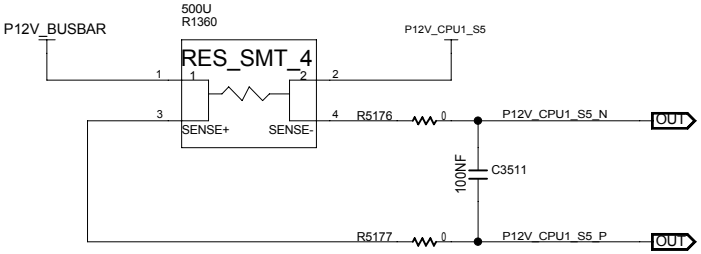

MODULE=---
FUNCTION=---

CNIT TECHNOLOGIES CO.,LTD.				
BOARD NAME BM-H14DSP_VERA			DRAWINGNO CNIT0302K1D0DL	
DESIGNED	ZHUHUI 00746	DATE 2024/10/22	SHEET 171 OF 276	REV
REVIEWED	GUBIN 00260	DATE 2024/11/22	Thu Jan 02 20:35:33 2025	

THIS DOCUMENT AND THE TECHNICAL DATA DISCLOSED ARE PROPRIETARY TO CNIT TECHNOLOGIES CO., LTD. AND SHALL NOT BE DUPLICATED USED RELEASED OR DISCLOSED WITHOUT EXPRESSING WRITTEN PERMISSION.

CPU0 CORE0

ADDR:0X84
COMPATIBLE IC:
VBOOT=0.9V
IEDC=230A
ITDC=175A
LL=0.4MR
INFINEON: XDPE192C3
MPS: MP2857GQKT-0000-Z
RENESAS: RAA229620

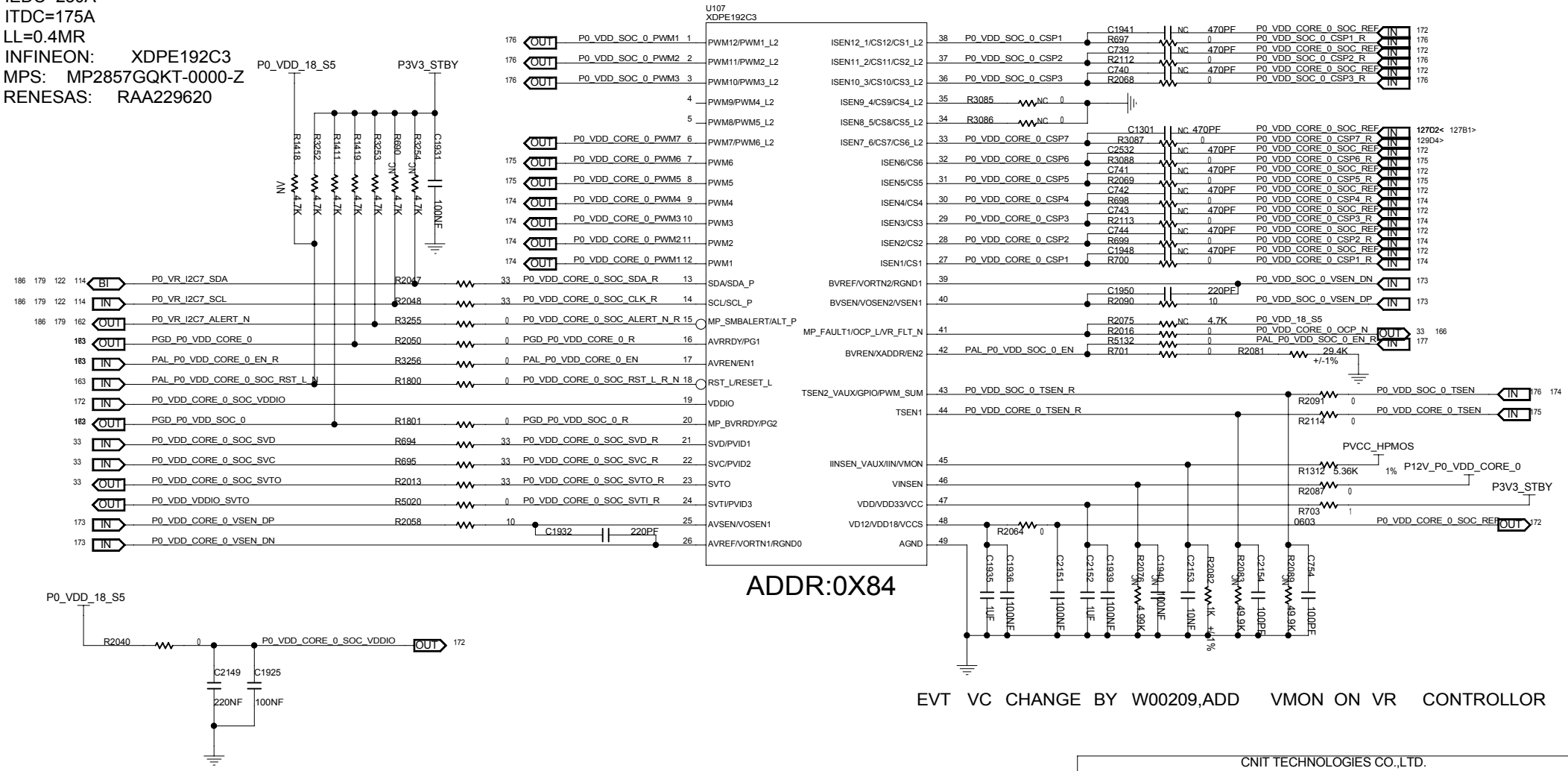

EVT VC CHANGE BY W00209,ADD VMON ON VR CONTROLLOR

MODULE=---
FUNCTION=---

CNIT TECHNOLOGIES CO.,LTD.				
BOARD NAME BM-H14DSP_VERA			DRAWINGNO CNIT0302K1D0DL	
DESIGNED	ZHUHUI 00746	DATE 2024/10/22	SHEET 172 OF 276	REV
REVIEWED	GUBIN 00260	DATE 2024/11/22	Wed Jan 08 21:06:56 2025	

THIS DOCUMENT AND THE TECHNICAL DATA DISCLOSED ARE PROPRIETARY TO CNIT TECHNOLOGIES CO., LTD. AND SHALL NOT BE DUPLICATED USED RELEASED OR DISCLOSED WITHOUT EXPRESSING WRITTEN PERMISSION.

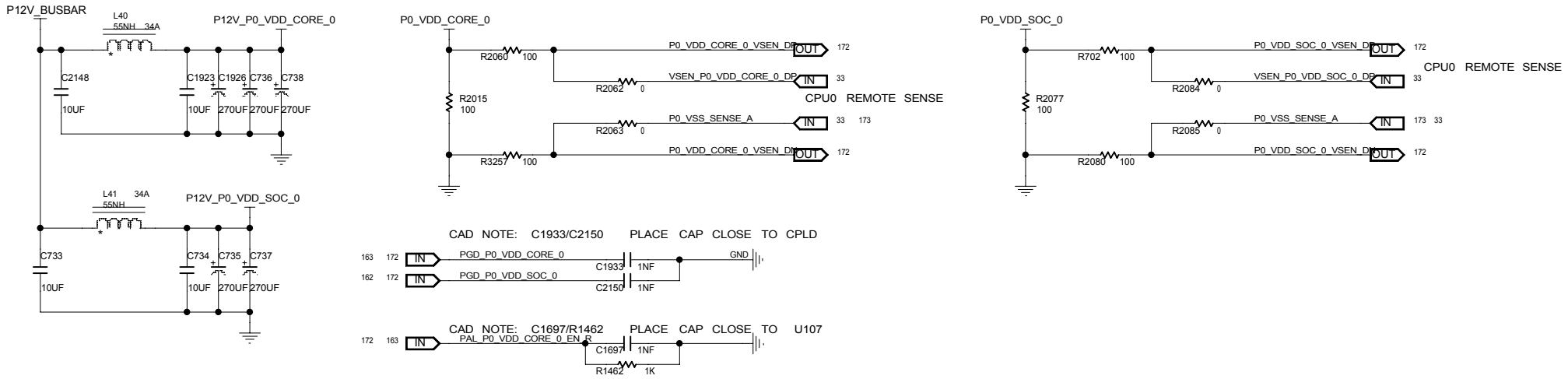

PIN	TSEN1/2	VINSEN	AVSEN	VCCS	CS	VINSEN	VINSEN	TSEN1	VCCS	CSX UNUSED	CSX	VMON		
PART	C754 C2154	C1940	C1932 C1950	C1935	C739 - C744 C1941,C1948 C2532	R2087	R2076	R2083	R2064	R3085 R3086 R3087	R697 - R700 R2068,R2069 R2112,R2113,R3088	R1312	R2082	C2153
INFINEON	100PF	NC	220PF	1UF	NC	0R	NC	NC	0R	NC	0R	5.36K	1K	10NF
MPS	10NF	1NF	NC	1UF	NC	75K	4.99K	49.9K	NC	NC	0R	15K	1K	NC
RENESAS	470PF	0.1UF	3.3NF	4.7UF	470PF	0R	NC	NC	0R	0R	100R	40.2K	10K	10NF

	LOCATE	VCC	EN	VREF	VO	SNUBBER		BOOT
	U60	R201	R671	C573	R910	C1997	R2299	R1402
	U62	R626	R628	C499	R630	C509	R625	R632
	U61	R617	R619	C467	R621	C480	R634	R624
	U63	R627	R629	C500	R631	C510	R635	R633
INFINEON		1	0	NC	NC	NC	NC	0
MPS		2.2	2K	NC	NC	NC	NC	0
RENESAS		1	0	100NF	0	1NF	2	3.3

		VCC	EN	VREF	VO	SNUBBER		BOOT
	U124	R616	R618	C466	R620	C476	R623	R622
INFINEON		1	0	NC	NC	NC	NC	0
MPS		2.2	2K	NC	NC	NC	NC	0
RENESAS		1	0	100NF	0	1NF	2	3.3

	HPMOS		LOCATE	VCC	EN	VREF	VO	SNUBBER		BOOT
	L2	L3	U3	R790	R599	C408	R598	C415	R602	R604
			U58	R606	R608	C437	R610	C447	R614	R612
			U57	R597	R601	C409	R600	C417	R603	R605
			U59	R607	R609	C438	R611	C448	R615	R613
INFINEON	/	NC		1	0	NC	NC	NC	NC	0
MPS	NC	/		2.2	2K	NC	NC	NC	NC	0
RENESAS	/	NC		1	0	100NF	0	1NF	2	3.3

PART	R701	R2081	ADDR
INFINEON	0R	29.4K	0X84
MPS	3.92K	0.3K	0X23
RENESAS	0R	1.65K	0X62

MODULE=---

FUNCTION=---

CNIT TECHNOLOGIES CO.,LTD.

BOARD NAME BM-H14DSP_VERA		DRAWINGNO CNIT0302K1D0DL	
DESIGNED	ZHUHUI 00746	DATE 2024/10/22	SHEET 173 OF 276
REVIEWED	GUBIN 00260	DATE 2024/11/22	Fri Dec 27 11:49:56 2024

REV

THIS DOCUMENT AND THE TECHNICAL DATA DISCLOSED ARE PROPRIETARY TO CNIT TECHNOLOGIES CO., LTD. AND SHALL NOT BE DUPLICATED USED RELEASED OR DISCLOSED WITHOUT EXPRESSING WRITTEN PERMISSION.

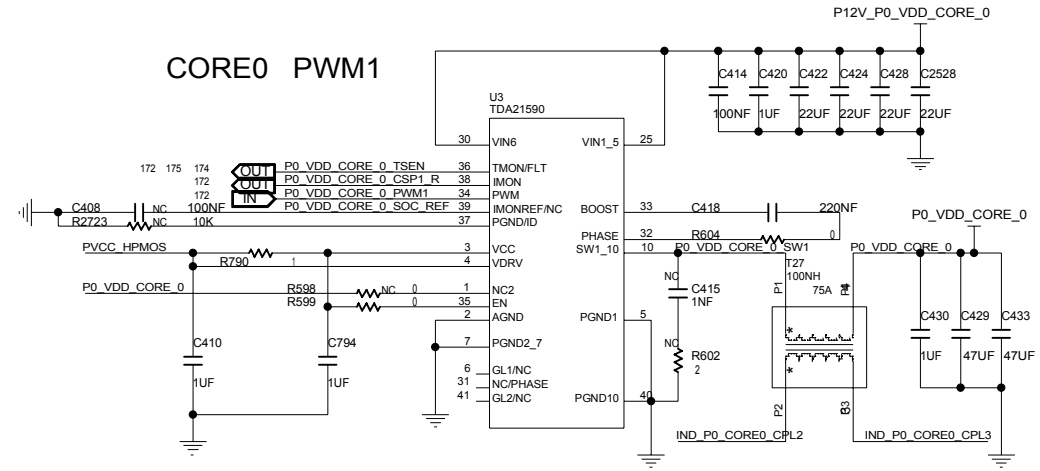

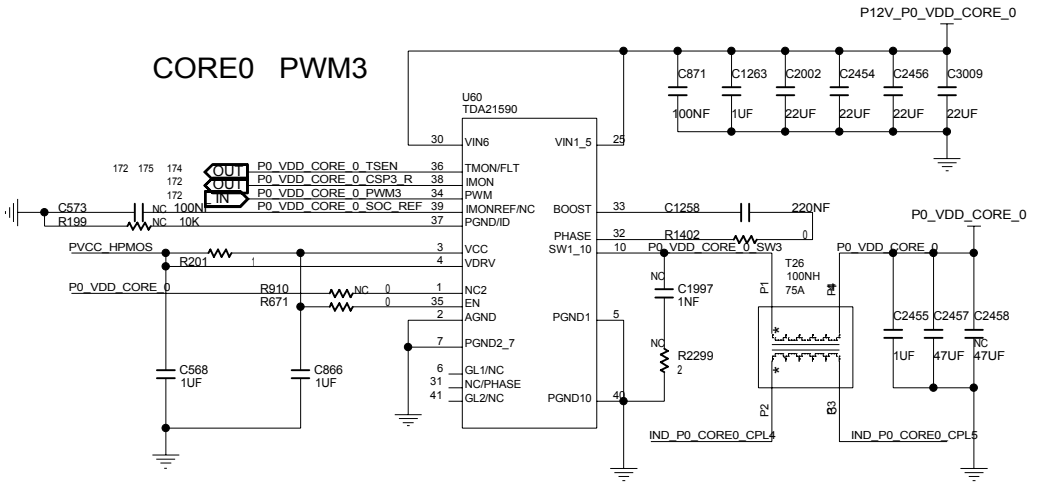

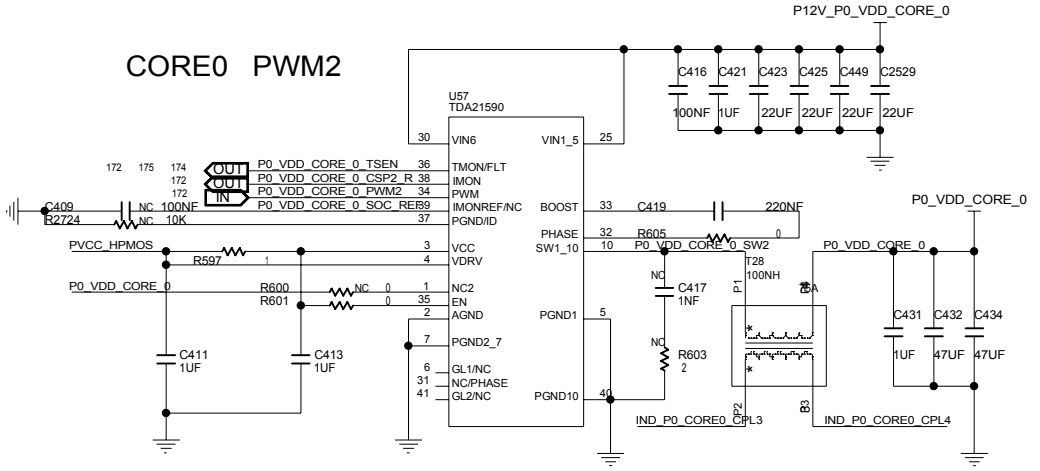

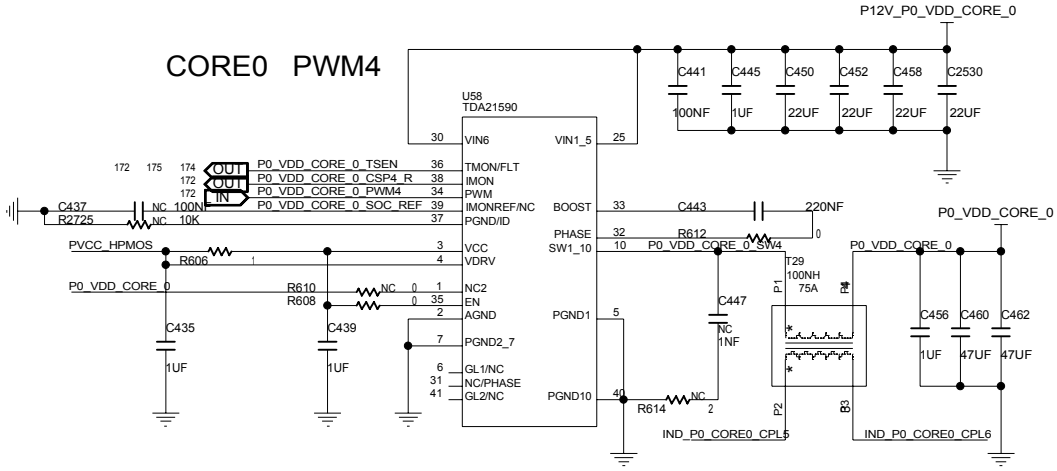

MODULE=---

FUNCTION=---

CNIT TECHNOLOGIES CO.,LTD.				
BOARD NAME BM-H14DSP_VERA			DRAWINGNO CNIT0302K1D0DL	
DESIGNED	ZHUHUI 00746	DATE 2024/10/22	SHEET 174 OF 276	REV
REVIEWED	GUBIN 00260	DATE 2024/11/22	Thu Jan 02 20:53:01 2025	

THIS DOCUMENT AND THE TECHNICAL DATA DISCLOSED ARE PROPRIETARY TO CNIT TECHNOLOGIES CO., LTD. AND SHALL NOT BE DUPLICATED USED RELEASED OR DISCLOSED WITHOUT EXPRESSING WRITTEN PERMISSION.

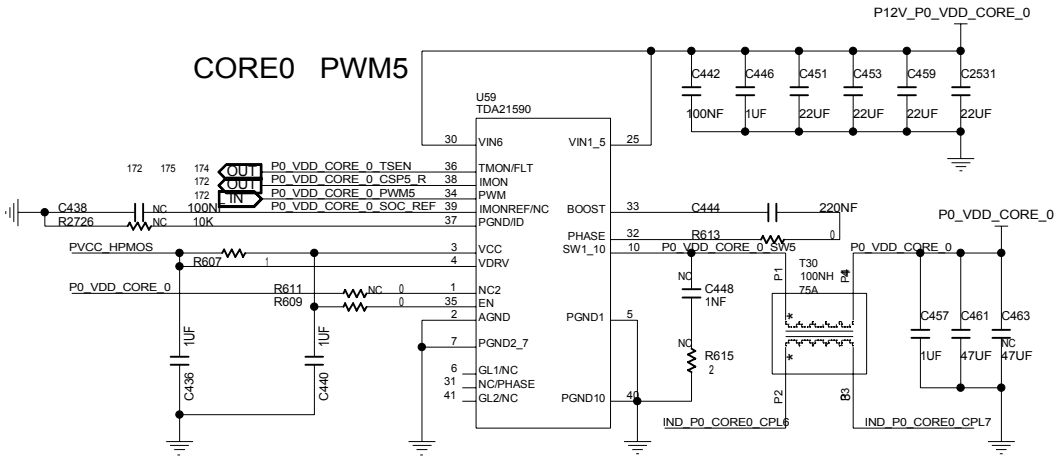

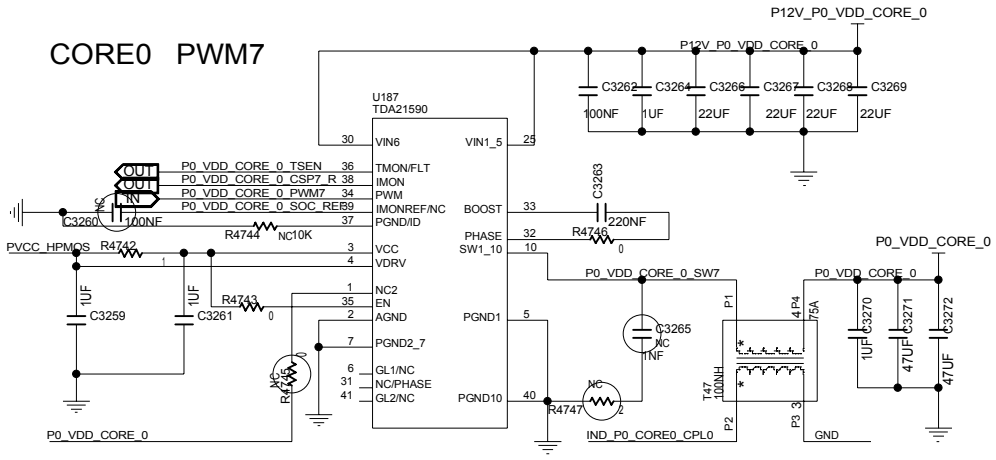

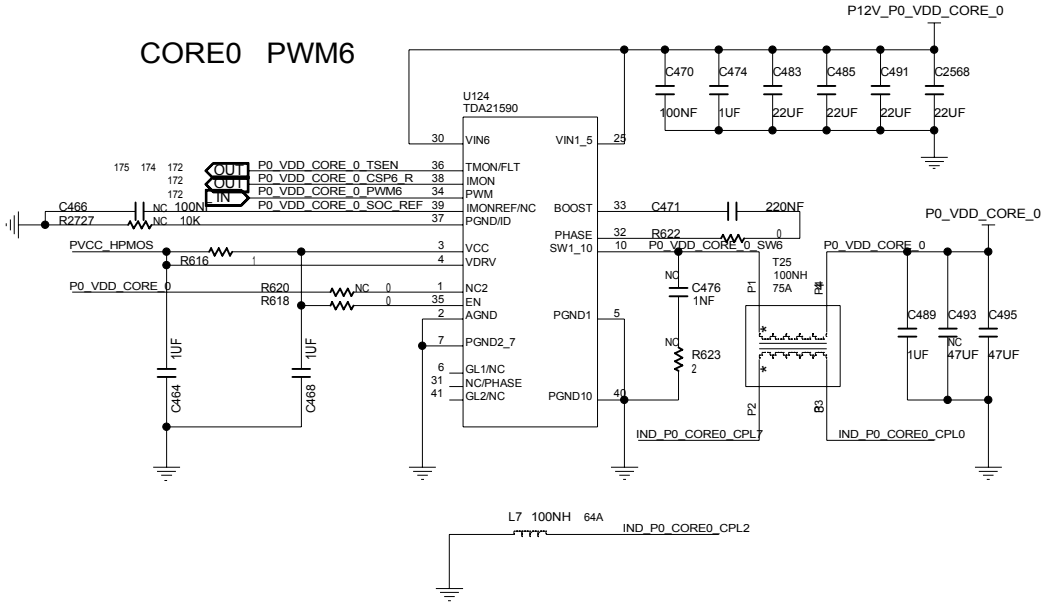

MODULE=---

FUNCTION=---

CNIT TECHNOLOGIES CO.,LTD.				
BOARD NAME BM-H14DSP_VERA			DRAWINGNO CNIT0302K1D0DL	
DESIGNED	ZHUHUI 00746	DATE 2024/10/22	SHEET 175 OF 276	REV
REVIEWED	GUBIN 00260	DATE 2024/11/22	Thu Jan 02 20:50:58 2025	

THIS DOCUMENT AND THE TECHNICAL DATA DISCLOSED ARE PROPRIETARY TO CNIT TECHNOLOGIES CO., LTD. AND SHALL NOT BE DUPLICATED USED RELEASED OR DISCLOSED WITHOUT EXPRESSING WRITTEN PERMISSION.

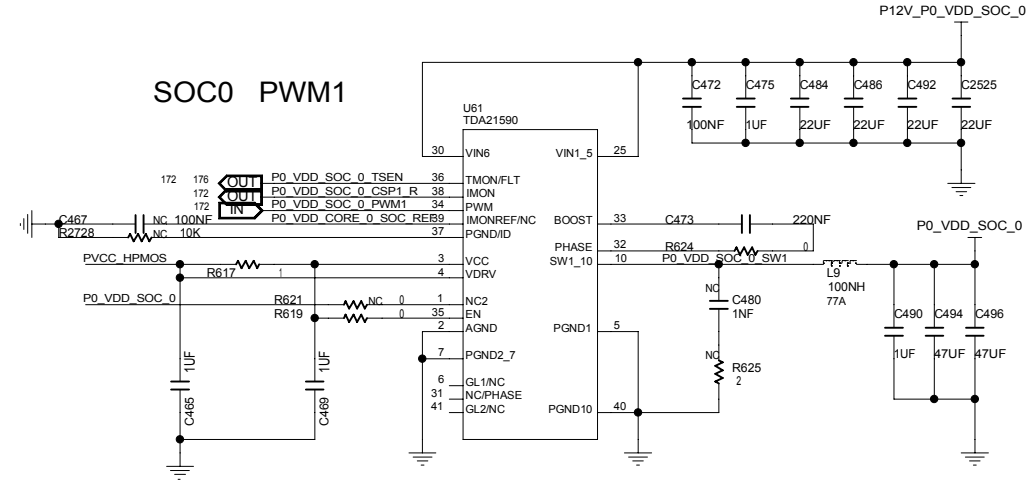

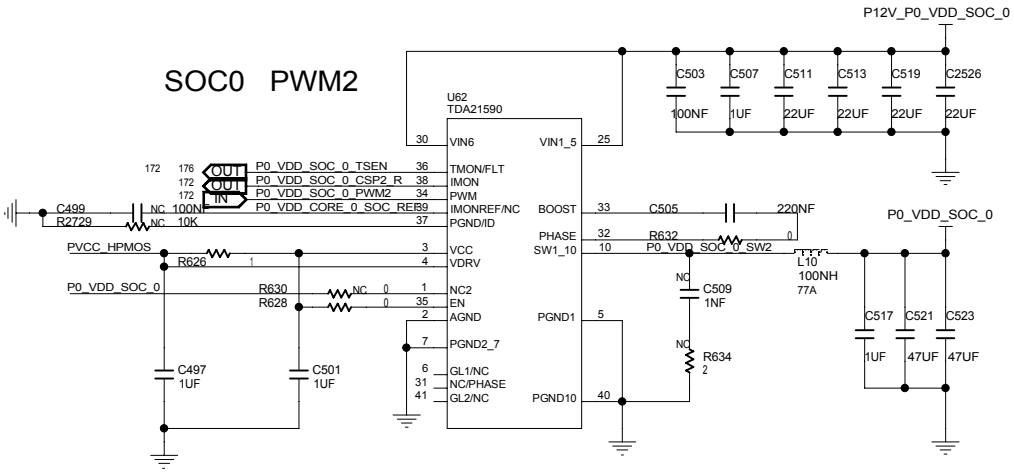

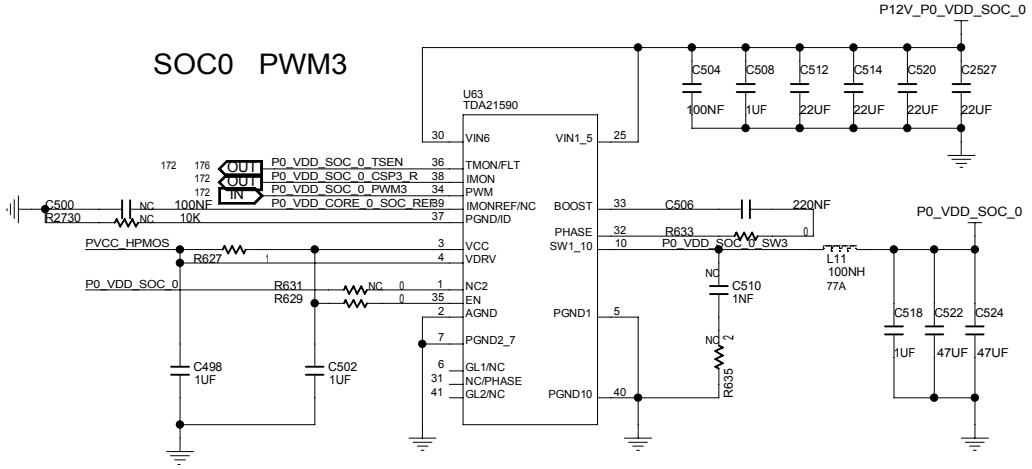

MODULE=---

FUNCTION=---

CNIT TECHNOLOGIES CO.,LTD.				
BOARD NAME BM-H14DSP_VERA			DRAWINGNO CNIT0302K1D0DL	
DESIGNED	ZHUHUI 00746	DATE 2024/10/22	SHEET 176 OF 276	REV
REVIEWED	GUBIN 00260	DATE 2024/11/22	Thu Jan 02 20:51:03 2025	

THIS DOCUMENT AND THE TECHNICAL DATA DISCLOSED ARE PROPRIETARY TO CNIT TECHNOLOGIES CO., LTD. AND SHALL NOT BE DUPLICATED USED RELEASED OR DISCLOSED WITHOUT EXPRESSING WRITTEN PERMISSION.

CPU0 CORE0

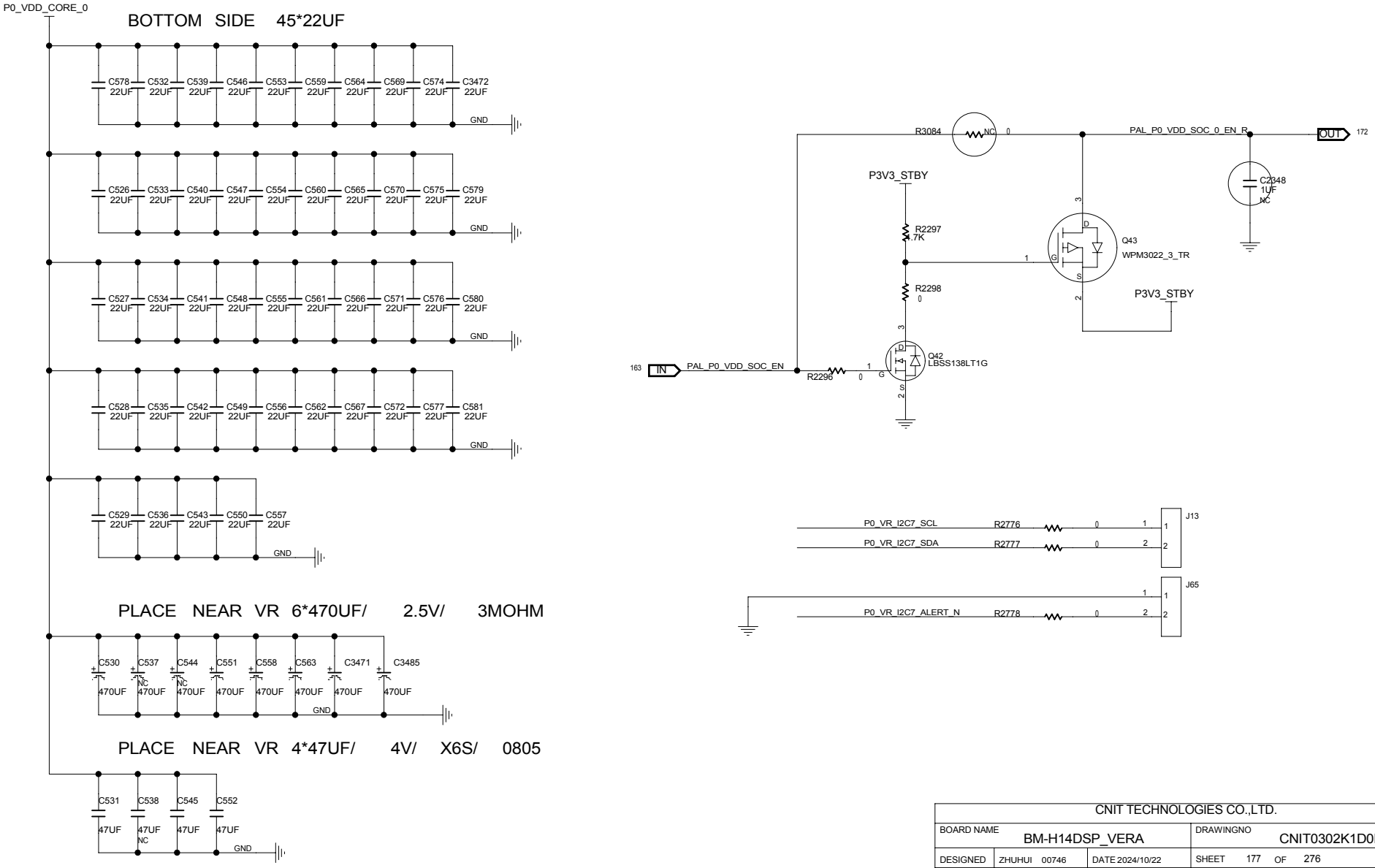

MODULE=---

FUNCTION=---

CNIT TECHNOLOGIES CO.,LTD.				
BOARD NAME BM-H14DSP_VERA			DRAWINGNO CNIT0302K1D0DL	
DESIGNED	ZHUHUI 00746	DATE 2024/10/22	SHEET 177 OF 276	REV
REVIEWED	GUBIN 00260	DATE 2024/11/22	Thu Jan 02 20:51:08 2025	

THIS DOCUMENT AND THE TECHNICAL DATA DISCLOSED ARE PROPRIETARY TO CNIT TECHNOLOGIES CO., LTD. AND SHALL NOT BE DUPLICATED USED RELEASED OR DISCLOSED WITHOUT EXPRESSING WRITTEN PERMISSION.

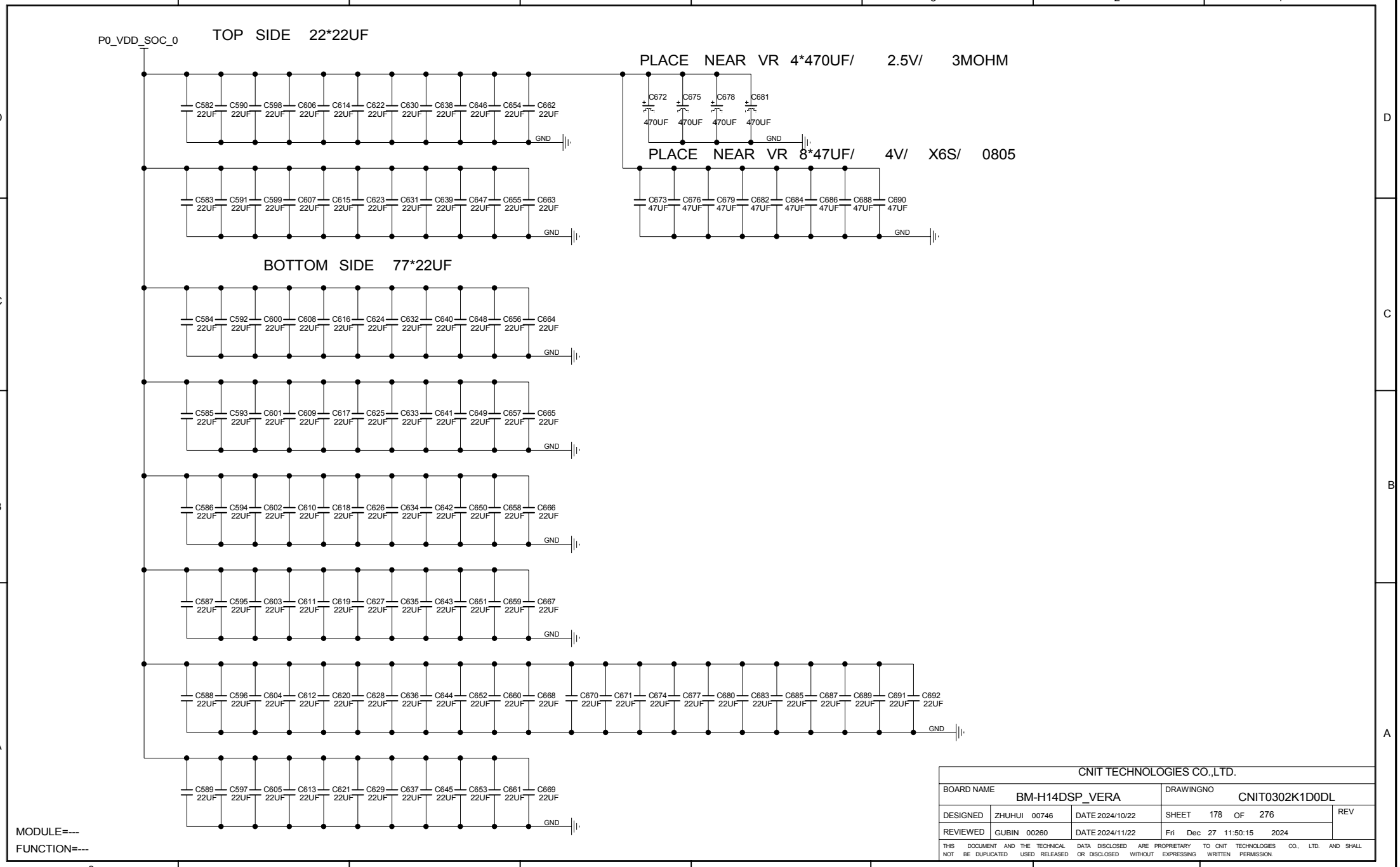

CNIT TECHNOLOGIES CO.,LTD.				
BOARD NAME BM-H14DSP_VERA			DRAWINGNO CNIT0302K1D0DL	
DESIGNED	ZHUHUI 00746	DATE 2024/10/22	SHEET 178 OF 276	REV
REVIEWED	GUBIN 00260	DATE 2024/11/22	Fri Dec 27 11:50:15 2024	

THIS DOCUMENT AND THE TECHNICAL DATA DISCLOSED ARE PROPRIETARY TO CNIT TECHNOLOGIES CO., LTD. AND SHALL NOT BE DUPLICATED USED RELEASED OR DISCLOSED WITHOUT EXPRESSING WRITTEN PERMISSION.

CPU0 CORE1

ADDR:0X94
COMPATIBLE IC:
INFINEON: XDPE192C3
MPS: MP2857GQKT-0000-Z
RENESAS: RAA229620
VBOOT=0.9V
ITDC=235A
IEDC=330A
LL=0.4MR

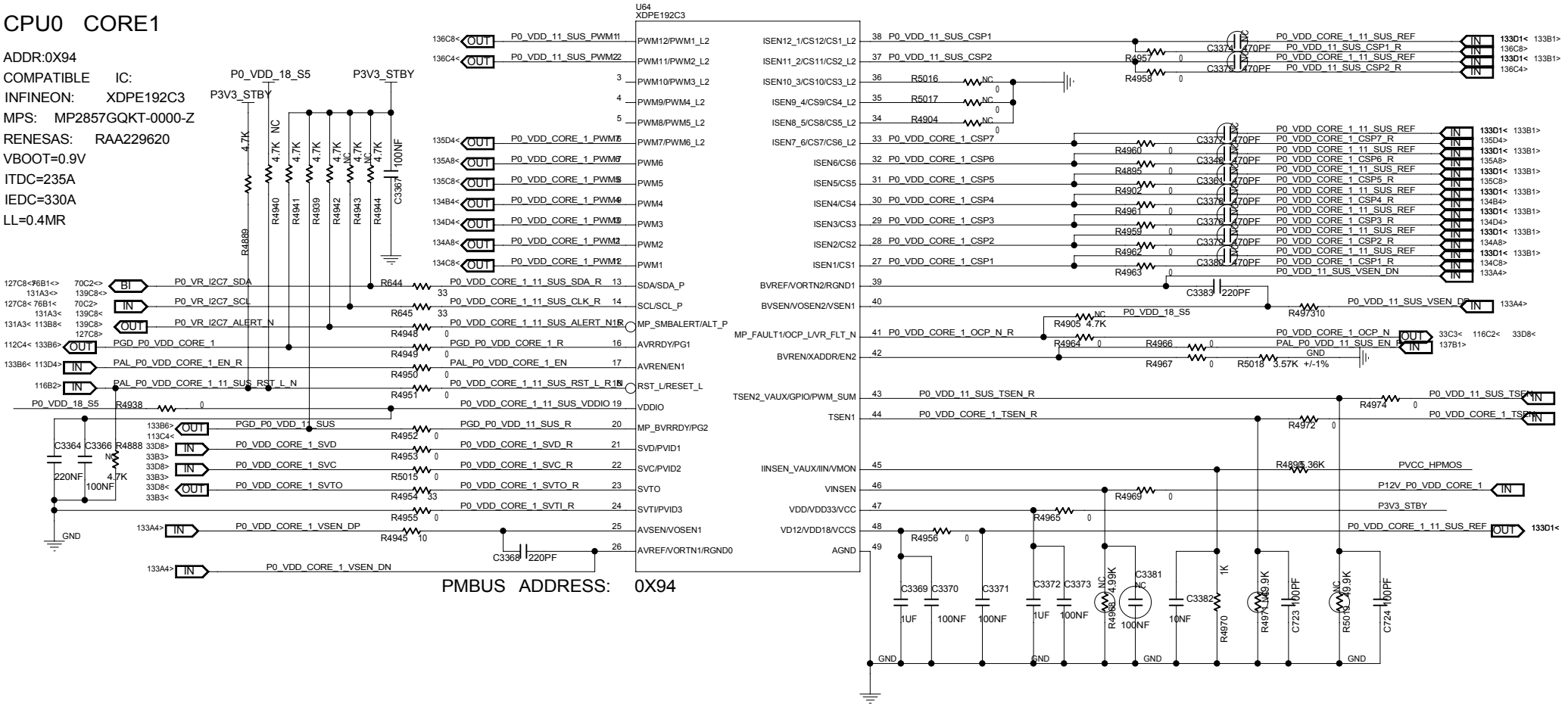

PMBUS ADDRESS: 0X94

MODULE=---
FUNCTION=---

CNIT TECHNOLOGIES CO.,LTD.				
BOARD NAME BM-H14DSP_VERA			DRAWINGNO CNIT0302K1D0DL	
DESIGNED	ZHUHUI 00746	DATE 2024/10/22	SHEET 179 OF 276	REV
REVIEWED	GUBIN 00260	DATE 2024/11/22	Tue Dec 31 14:35:43 2024	

THIS DOCUMENT AND THE TECHNICAL DATA DISCLOSED ARE PROPRIETARY TO CNIT TECHNOLOGIES CO., LTD. AND SHALL NOT BE DUPLICATED USED RELEASED OR DISCLOSED WITHOUT EXPRESSING WRITTEN PERMISSION.

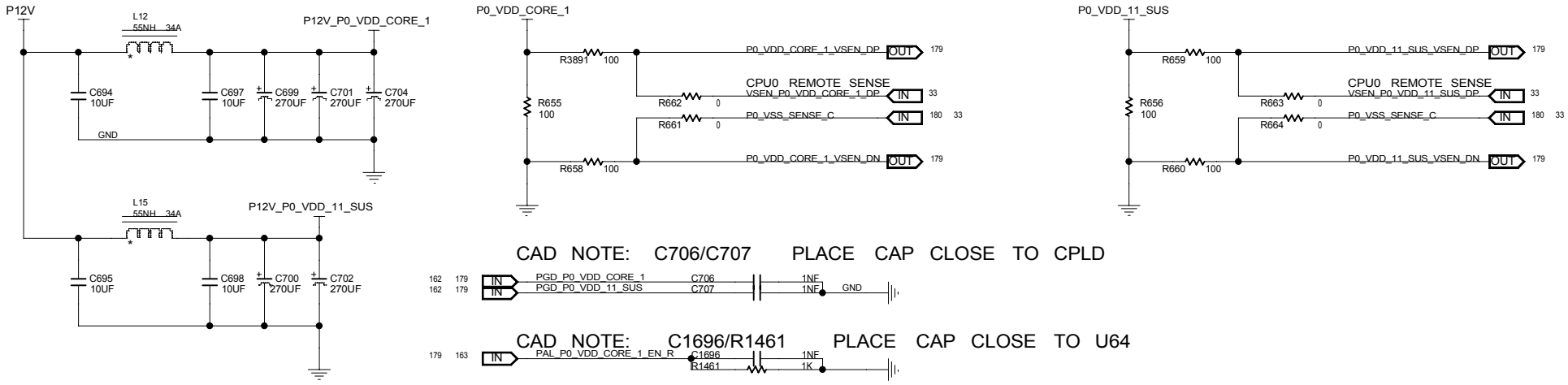

PART	R677	R680	ADDR
INFINEON	0R	3.57K	0X94
MPS	12K	1.3K	0X27
RENESAS	0R	3.57K	0X63

PIN	TSEN1/2	VINSEN	AVSEN	VD12	CS	VINSEN	VINSEN	TSEN1	VD12	CSX	VMON		
PART	C723 C724	C720	C705 C722	C708	C713 - C719 C2459	R679	R678	R682	R665	R666 - R670 R672 - R673,R2553	R1310	R681	C721
INFINEON	100PF	NC	220PF	1UF	NC	0R	NC	NC	0R	0R	5.36K	1K	10NF
MPS	10NF	1NF	NC	1UF	NC	75K	4.99K	49.9K	NC	0R	15K	1K	NC
RENESAS	470PF	0.1UF	3.3NF	4.7UF	470PF	0R	NC	NC	0R	100R	40.2K	10K	10NF

		VCC	EN	VREF	VO	SNUBBER		BOOT
	U8	R808	R809	C1085	R811	C1094	R815	R813
	U100	R2534	R2535	C3	R2536	C42	R2676	R2606
	U9	R715	R810	C1086	R812	C1095	R816	R814
	U10	R817	R818	C1385	R819	C1389	R821	R820
INFINEON		1	0	NC	NC	NC	NC	0
MPS		2.2	2K	NC	NC	NC	NC	0
RENESAS		1	0	100NF	0	1NF	2	3.3

		VCC	EN	VREF	VO	SNUBBER		BOOT
	U4	R596	R792	C797	R794	C804	R798	R796
	U6	R800	R801	C813	R803	C821	R806	R804
	U5	R791	R793	C798	R795	C805	R799	R797
	U7	R714	R802	C814	R717	C822	R807	R805
INFINEON		1	0	NC	NC	NC	NC	0
MPS		2.2	2K	NC	NC	NC	NC	0
RENESAS		1	0	100NF	0	1NF	2	3.3

		VCC	EN	VREF	VO	SNUBBER		BOOT
	U11	R761	R766	C976	R768	C986	R772	R770
	U13	R773	R775	C1003	R777	C1013	R780	R779
	U12	R760	R765	C975	R767	C985	R771	R769
	U14	R774	R776	C1004	R778	C1014	R782	R781
INFINEON		1	0	NC	NC	NC	NC	0
MPS		2.2	2K	NC	NC	NC	NC	0
RENESAS		1	0	100NF	0	1NF	2	3.3

MODULE=---

FUNCTION=---

CNIT TECHNOLOGIES CO.,LTD.

BOARD NAME	BM-H14DSP_VERA		DRAWINGNO	CNIT0302K1D0DL	
DESIGNED	ZHUHUI 00746	DATE 2024/10/22	SHEET 180 OF 276		REV
REVIEWED	GUBIN 00260	DATE 2024/11/22	Fri Dec 27 11:50:17 2024		

THIS DOCUMENT AND THE TECHNICAL DATA DISCLOSED ARE PROPRIETARY TO CNIT TECHNOLOGIES CO., LTD. AND SHALL NOT BE DUPLICATED USED RELEASED OR DISCLOSED WITHOUT EXPRESSING WRITTEN PERMISSION.

CPU0 CORE1

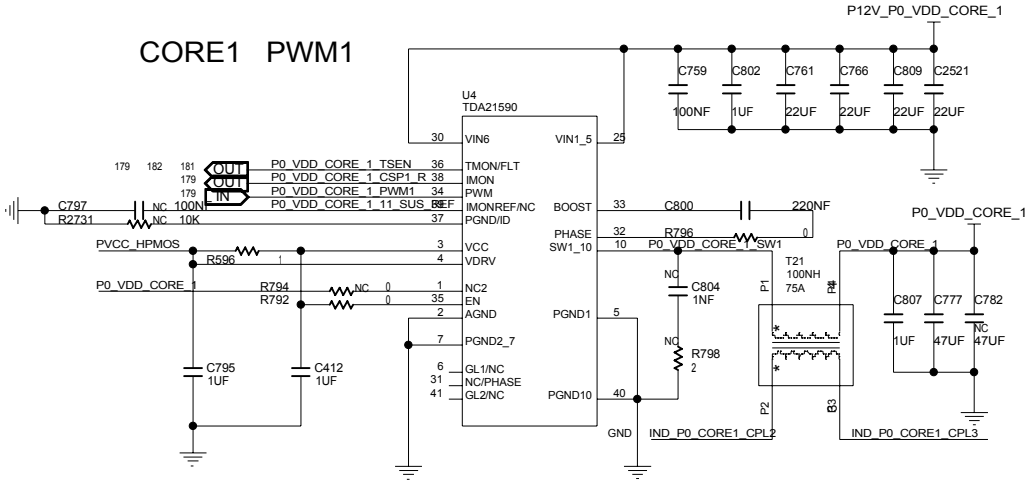

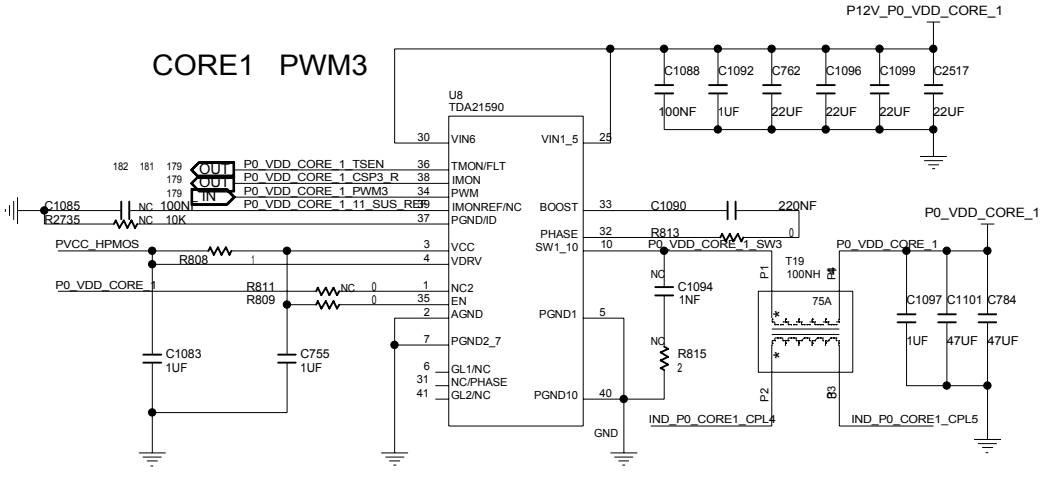

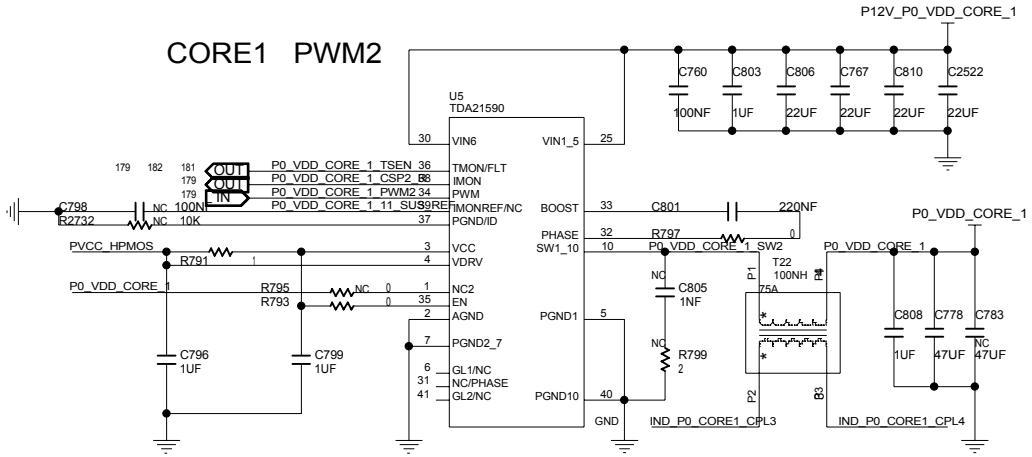

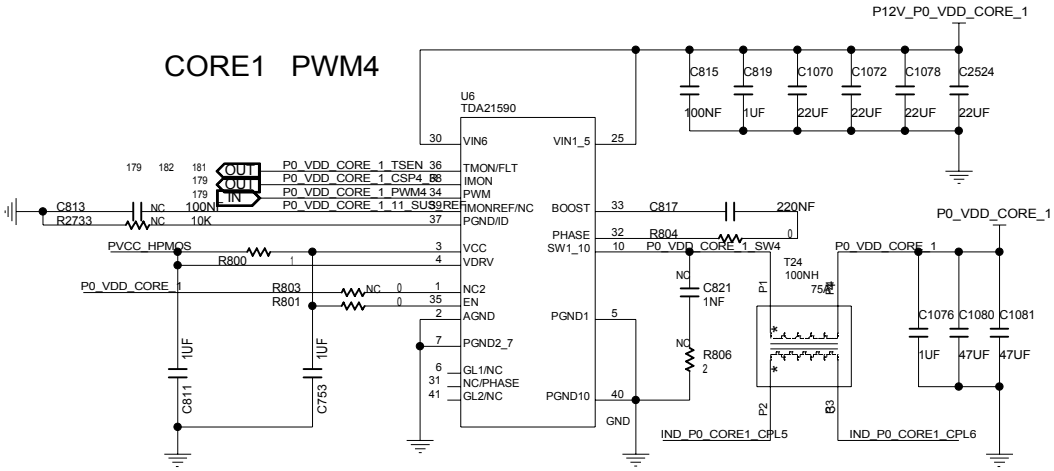

MODULE=---

FUNCTION=---

CNIT TECHNOLOGIES CO.,LTD.				
BOARD NAME BM-H14DSP_VERA			DRAWINGNO CNIT0302K1D0DL	
DESIGNED	ZHUHUI 00746	DATE 2024/10/22	SHEET 181 OF 276	REV
REVIEWED	GUBIN 00260	DATE 2024/11/22	Thu Jan 02 20:51:13 2025	

THIS DOCUMENT AND THE TECHNICAL DATA DISCLOSED ARE PROPRIETARY TO CNIT TECHNOLOGIES CO., LTD. AND SHALL NOT BE DUPLICATED USED RELEASED OR DISCLOSED WITHOUT EXPRESSING WRITTEN PERMISSION.

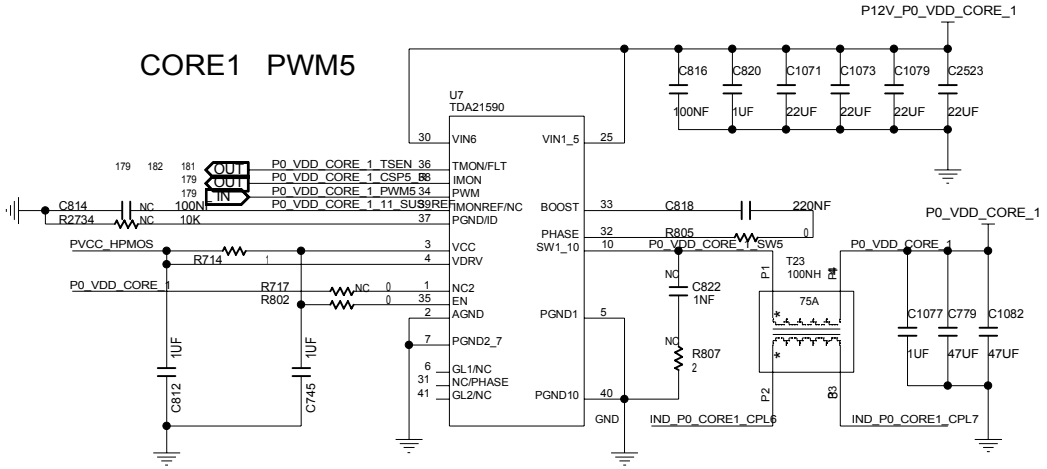

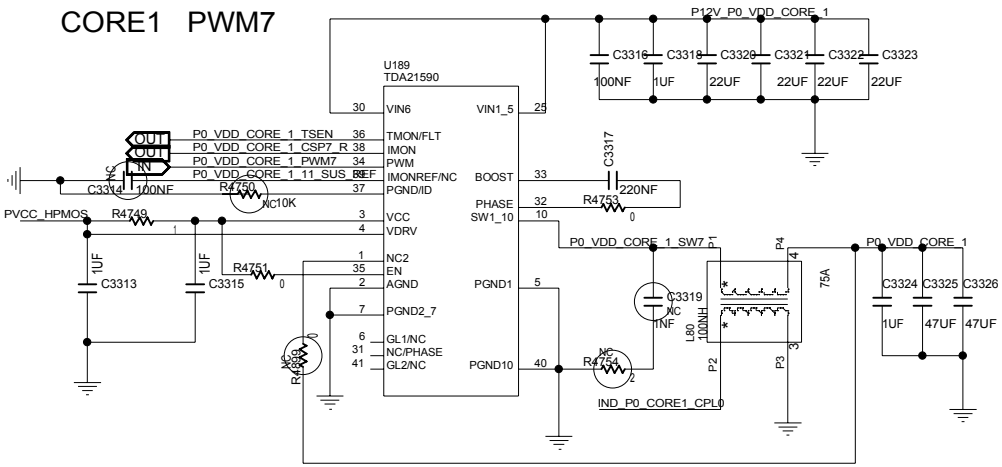

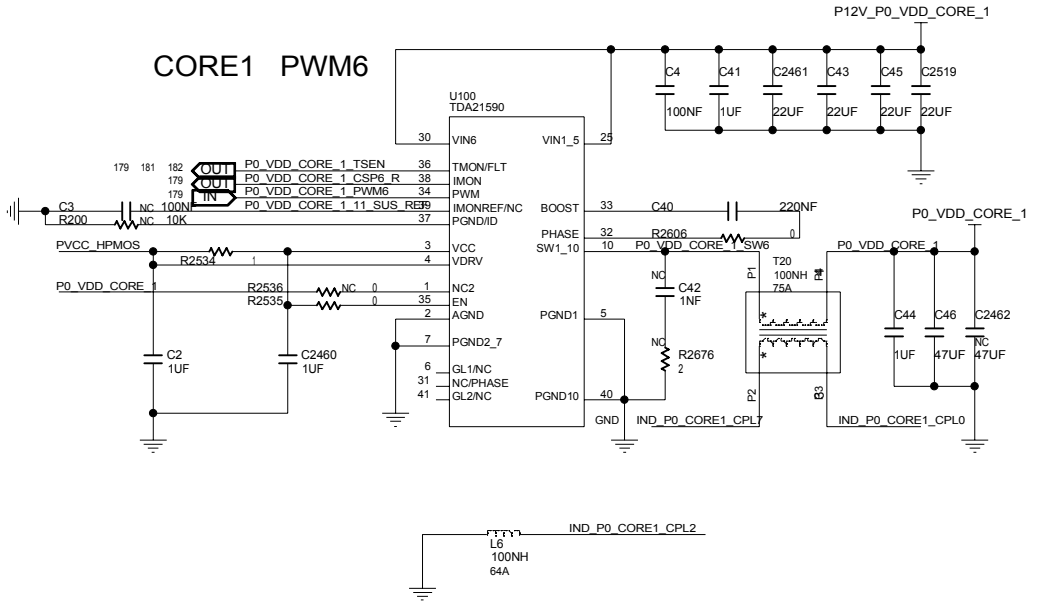

MODULE=---

FUNCTION=---

CNIT TECHNOLOGIES CO.,LTD.				
BOARD NAME BM-H14DSP_VERA			DRAWINGNO CNIT0302K1D0DL	
DESIGNED	ZHUHUI 00746	DATE 2024/10/22	SHEET 182 OF 276	REV
REVIEWED	GUBIN 00260	DATE 2024/11/22	Thu Jan 02 20:51:18 2025	

THIS DOCUMENT AND THE TECHNICAL DATA DISCLOSED ARE PROPRIETARY TO CNIT TECHNOLOGIES CO., LTD. AND SHALL NOT BE DUPLICATED USED RELEASED OR DISCLOSED WITHOUT EXPRESSING WRITTEN PERMISSION.

CPU0 CORE1

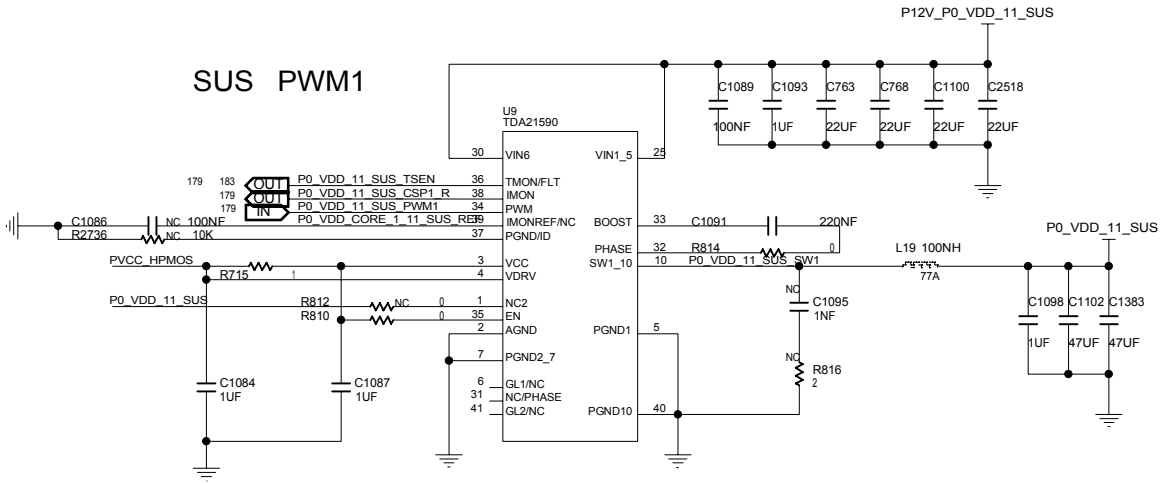

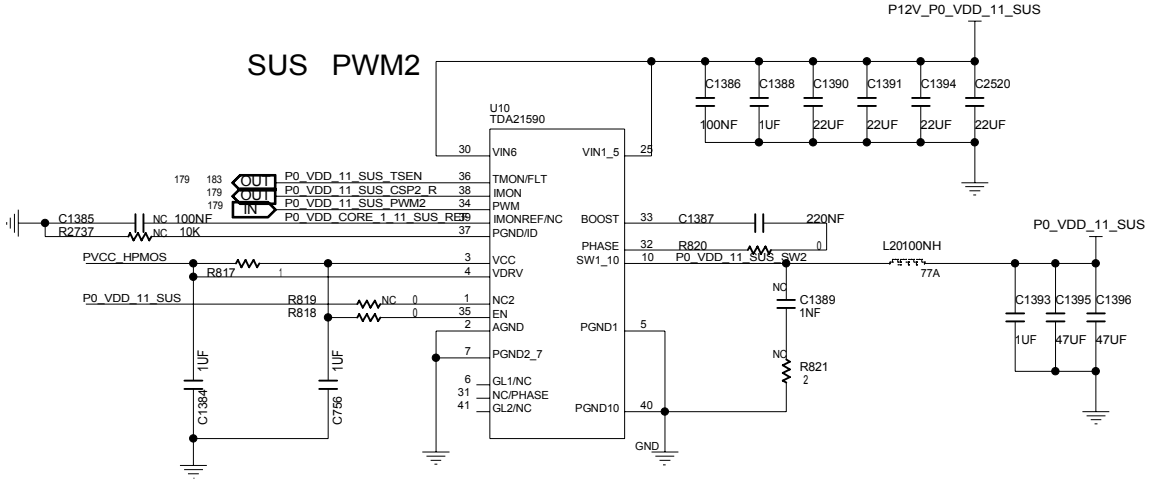

MODULE=---

FUNCTION=---

CNIT TECHNOLOGIES CO.,LTD.				
BOARD NAME BM-H14DSP_VERA			DRAWINGNO CNIT0302K1D0DL	
DESIGNED	ZHUHUI 00746	DATE 2024/10/22	SHEET 183 OF 276	REV
REVIEWED	GUBIN 00260	DATE 2024/11/22	Thu Jan 02 20:51:23 2025	

THIS DOCUMENT AND THE TECHNICAL DATA DISCLOSED ARE PROPRIETARY TO CNIT TECHNOLOGIES CO., LTD. AND SHALL NOT BE DUPLICATED USED RELEASED OR DISCLOSED WITHOUT EXPRESSING WRITTEN PERMISSION.

CPU0 CORE1

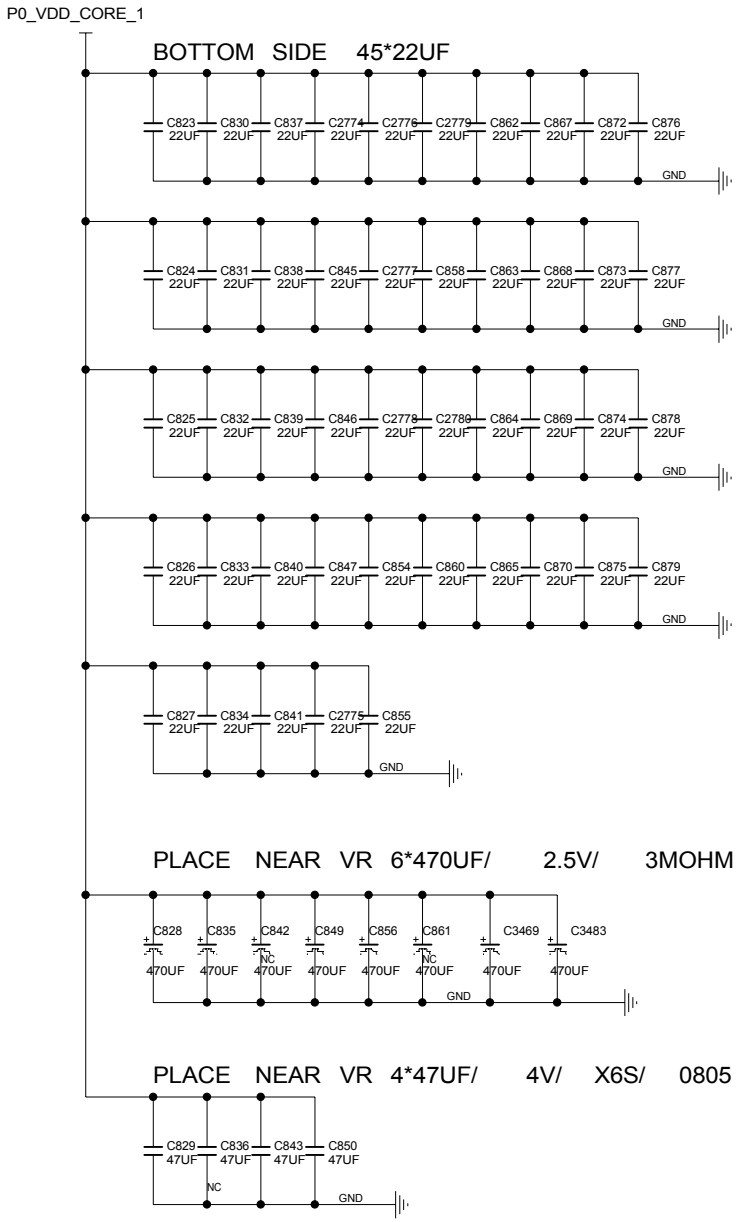

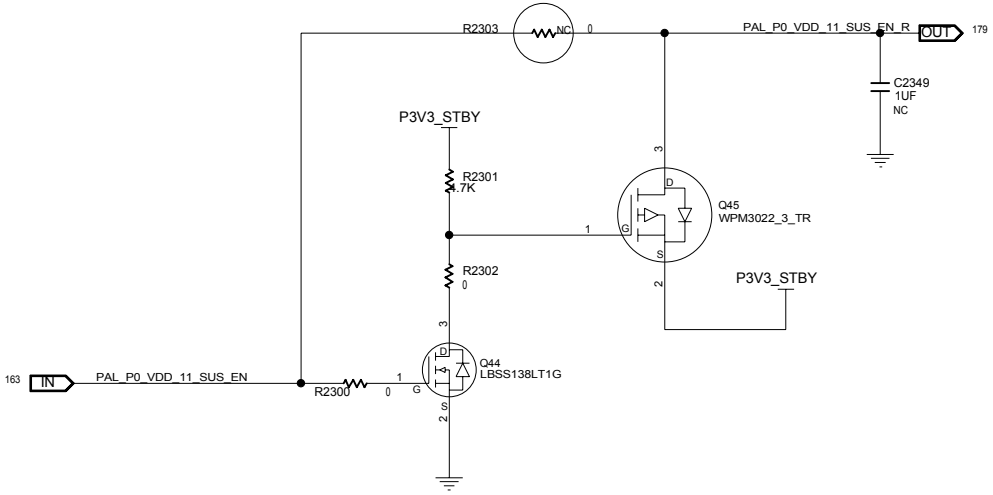

MODULE=---

FUNCTION=---

CNIT TECHNOLOGIES CO.,LTD.				
BOARD NAME BM-H14DSP_VERA			DRAWINGNO CNIT0302K1D0DL	
DESIGNED	ZHUHUI 00746	DATE 2024/10/22	SHEET 184 OF 276	REV
REVIEWED	GUBIN 00260	DATE 2024/11/22	Thu Jan 02 20:51:27 2025	

THIS DOCUMENT AND THE TECHNICAL DATA DISCLOSED ARE PROPRIETARY TO CNIT TECHNOLOGIES CO., LTD. AND SHALL NOT BE DUPLICATED USED RELEASED OR DISCLOSED WITHOUT EXPRESSING WRITTEN PERMISSION.

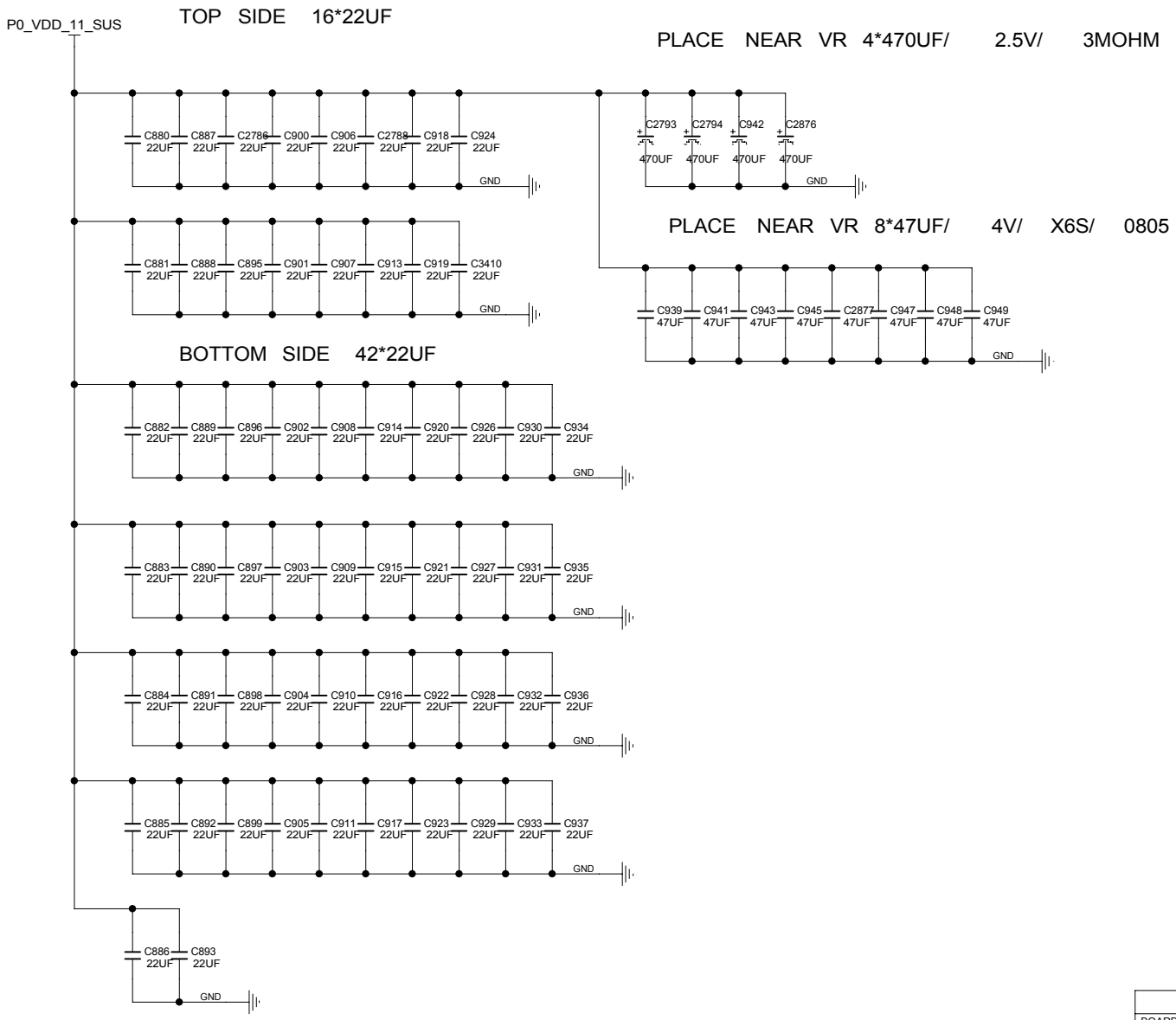

MODULE=---
FUNCTION=---

CNIT TECHNOLOGIES CO.,LTD.				
BOARD NAME BM-H14DSP_VERA			DRAWINGNO CNIT0302K1D0DL	
DESIGNED	ZHUHUI 00746	DATE 2024/10/22	SHEET 185 OF 276	REV
REVIEWED	GUBIN 00260	DATE 2024/11/22	Fri Dec 27 11:50:37 2024	

THIS DOCUMENT AND THE TECHNICAL DATA DISCLOSED ARE PROPRIETARY TO CNIT TECHNOLOGIES CO., LTD. AND SHALL NOT BE DUPLICATED USED RELEASED OR DISCLOSED WITHOUT EXPRESSING WRITTEN PERMISSION.

CPU0 VDDIO

ADDR:0X80
COMPATIBLE IC:
INFINEON: XDPE19283A
MPS: MP2856
RENESAS: RAA229621
VBOOT=0.9V
ITDC=120A
IEDC=140A
LL=0.4MR

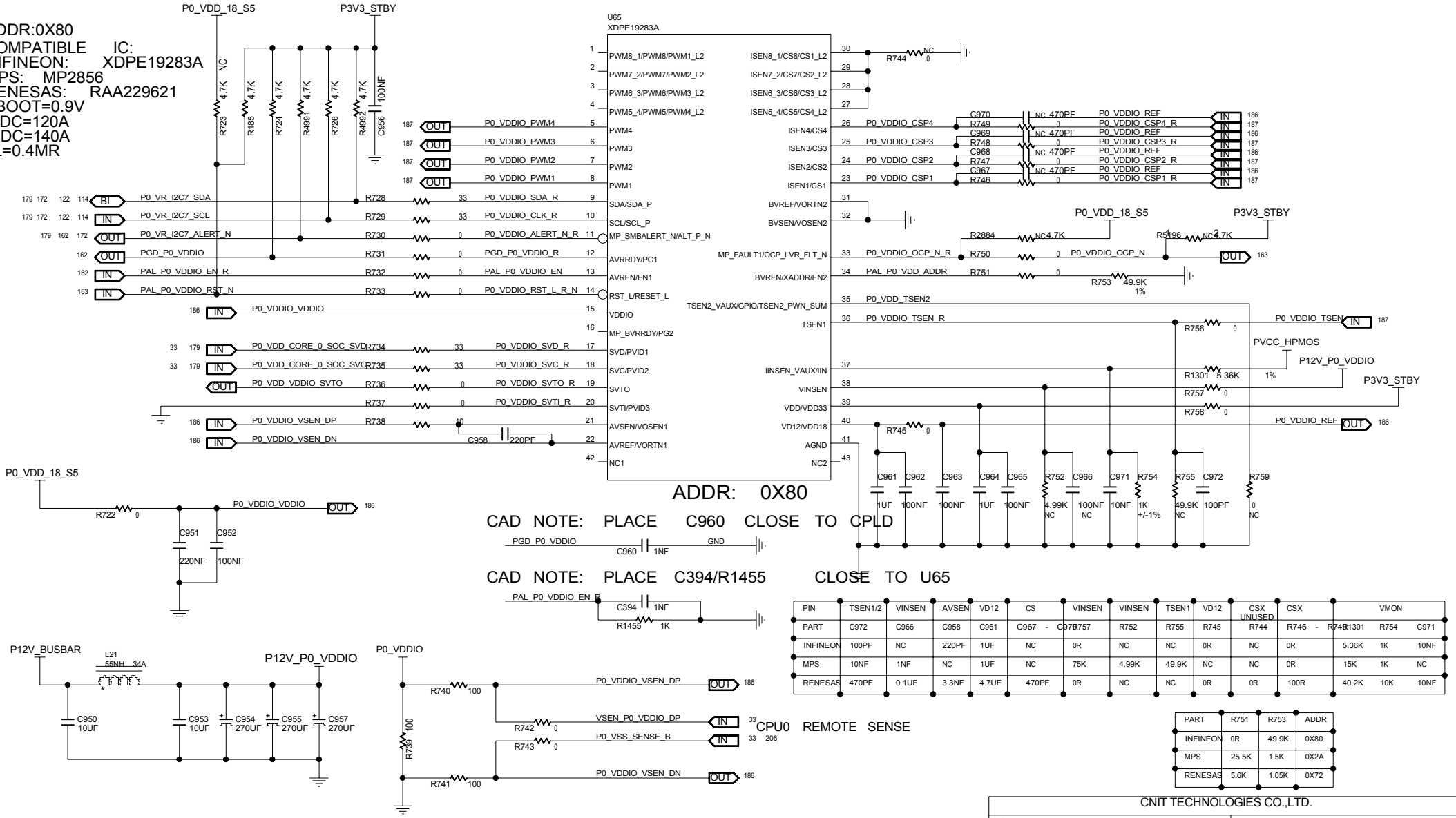

PIN	TSEN1/2	VINSEN	AVSEN	VD12	CS	VINSEN	VINSEN	TSEN1	VD12	CSX UNUSED	CSX	VMON		
PART	C972	C966	C958	C961	C967 - C970	R757	R752	R755	R745	R744	R746 - R749	R1301	R754	C971
INFINEON	100PF	NC	220PF	1UF	NC	0R	NC	NC	0R	NC	0R	5.36K	1K	10NF
MPS	10NF	1NF	NC	1UF	NC	75K	4.99K	49.9K	NC	NC	0R	15K	1K	NC
RENESAS	470PF	0.1UF	3.3NF	4.7UF	470PF	0R	NC	NC	0R	0R	100R	40.2K	10K	10NF

PART	R751	R753	ADDR
INFINEON	0R	49.9K	0X80
MPS	25.5K	1.5K	0X2A
RENESAS	5.6K	1.05K	0X72

MODULE=---
FUNCTION=---

CNIT TECHNOLOGIES CO.,LTD.

BOARD NAME	BM-H14DSP_VERA	DRAWINGNO	CNIT0302K1D0DL
DESIGNED	ZHUHUI 00746	DATE 2024/10/22	SHEET 186 OF 276
REVIEWED	GUBIN 00260	DATE 2024/11/22	Tue Dec 31 17:16:31 2024

REV

THIS DOCUMENT AND THE TECHNICAL DATA DISCLOSED ARE PROPRIETARY TO CNIT TECHNOLOGIES CO., LTD. AND SHALL NOT BE DUPLICATED USED RELEASED OR DISCLOSED WITHOUT EXPRESSING WRITTEN PERMISSION.

CPU0 VDDIO

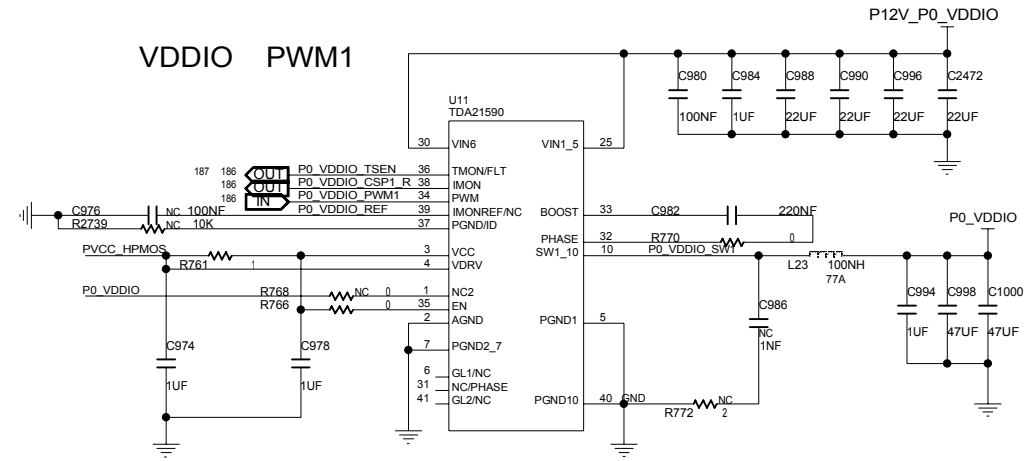

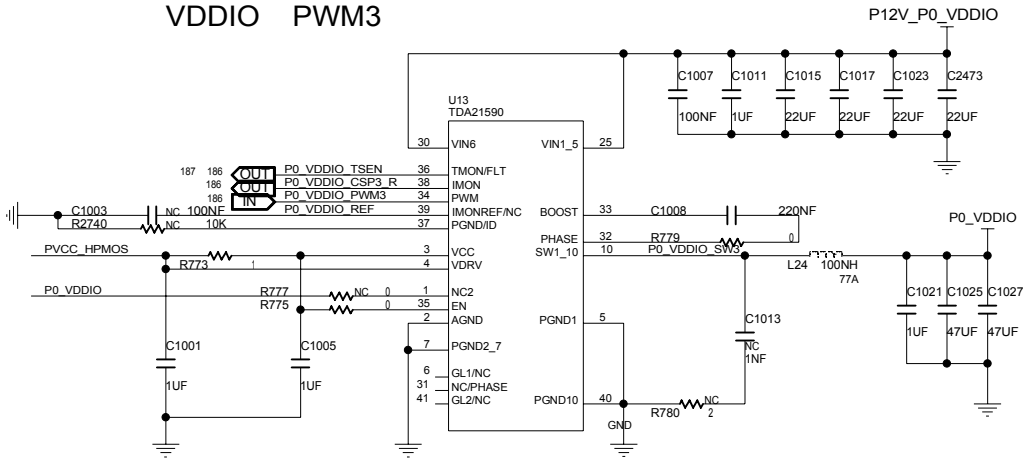

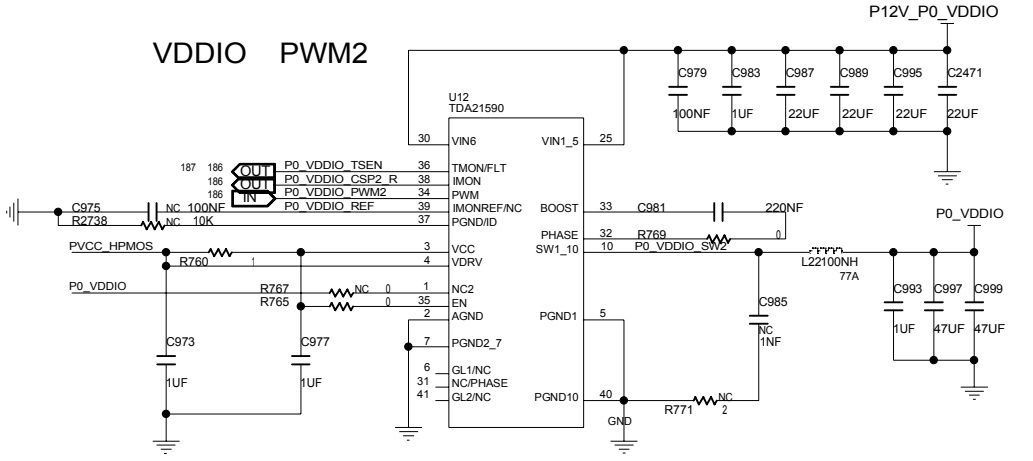

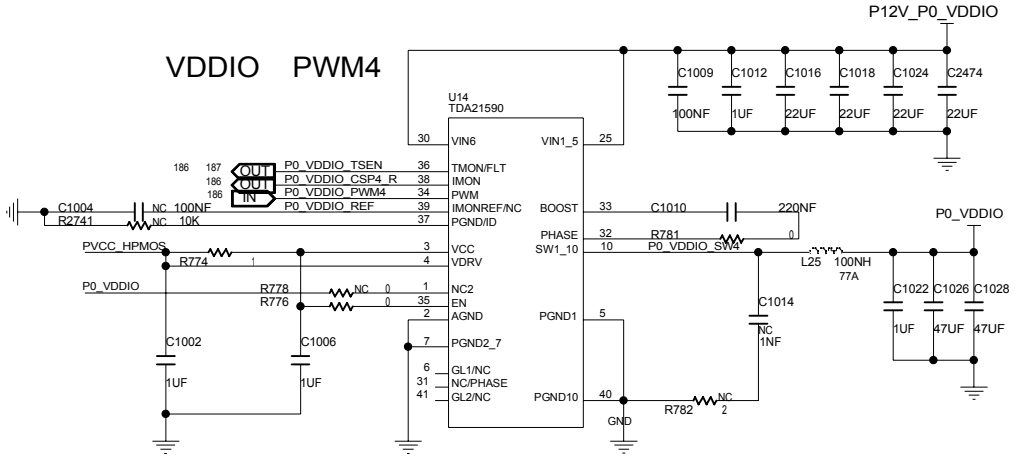

MODULE=---

FUNCTION=---

CNIT TECHNOLOGIES CO.,LTD.				
BOARD NAME BM-H14DSP_VERA			DRAWINGNO CNIT0302K1D0DL	
DESIGNED	ZHUHUI 00746	DATE 2024/10/22	SHEET 187 OF 276	REV
REVIEWED	GUBIN 00260	DATE 2024/11/22	Thu Jan 02 20:51:32 2025	

THIS DOCUMENT AND THE TECHNICAL DATA DISCLOSED ARE PROPRIETARY TO CNIT TECHNOLOGIES CO., LTD. AND SHALL NOT BE DUPLICATED USED RELEASED OR DISCLOSED WITHOUT EXPRESSING WRITTEN PERMISSION.

CPU0 VDDIO

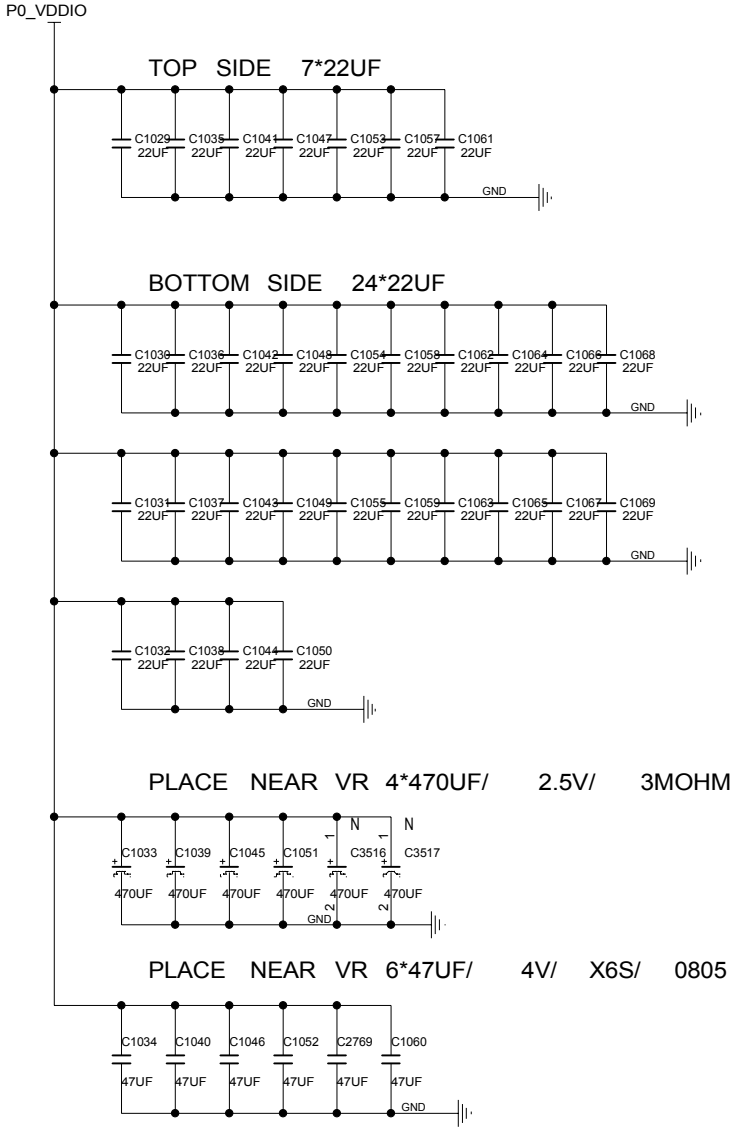

MODULE=---

FUNCTION=---

CNIT TECHNOLOGIES CO.,LTD.				
BOARD NAME BM-H14DSP_VERA			DRAWINGNO CNIT0302K1D0DL	
DESIGNED	ZHUHUI 00746	DATE 2024/10/22	SHEET 188 OF 276	REV
REVIEWED	GUBIN 00260	DATE 2024/11/22	Mon Apr 21 09:48:47 2025	

THIS DOCUMENT AND THE TECHNICAL DATA DISCLOSED ARE PROPRIETARY TO CNIT TECHNOLOGIES CO., LTD. AND SHALL NOT BE DUPLICATED USED RELEASED OR DISCLOSED WITHOUT EXPRESSING WRITTEN PERMISSION.

CPU1 CORE0

VBOOT=0.9V
ITDC=175A
IEDC=230A
LL=0.4MR

INFINEON: XDPE192C3
MPS: MP2857GQKT-0000-Z
RENESAS: RAA229620

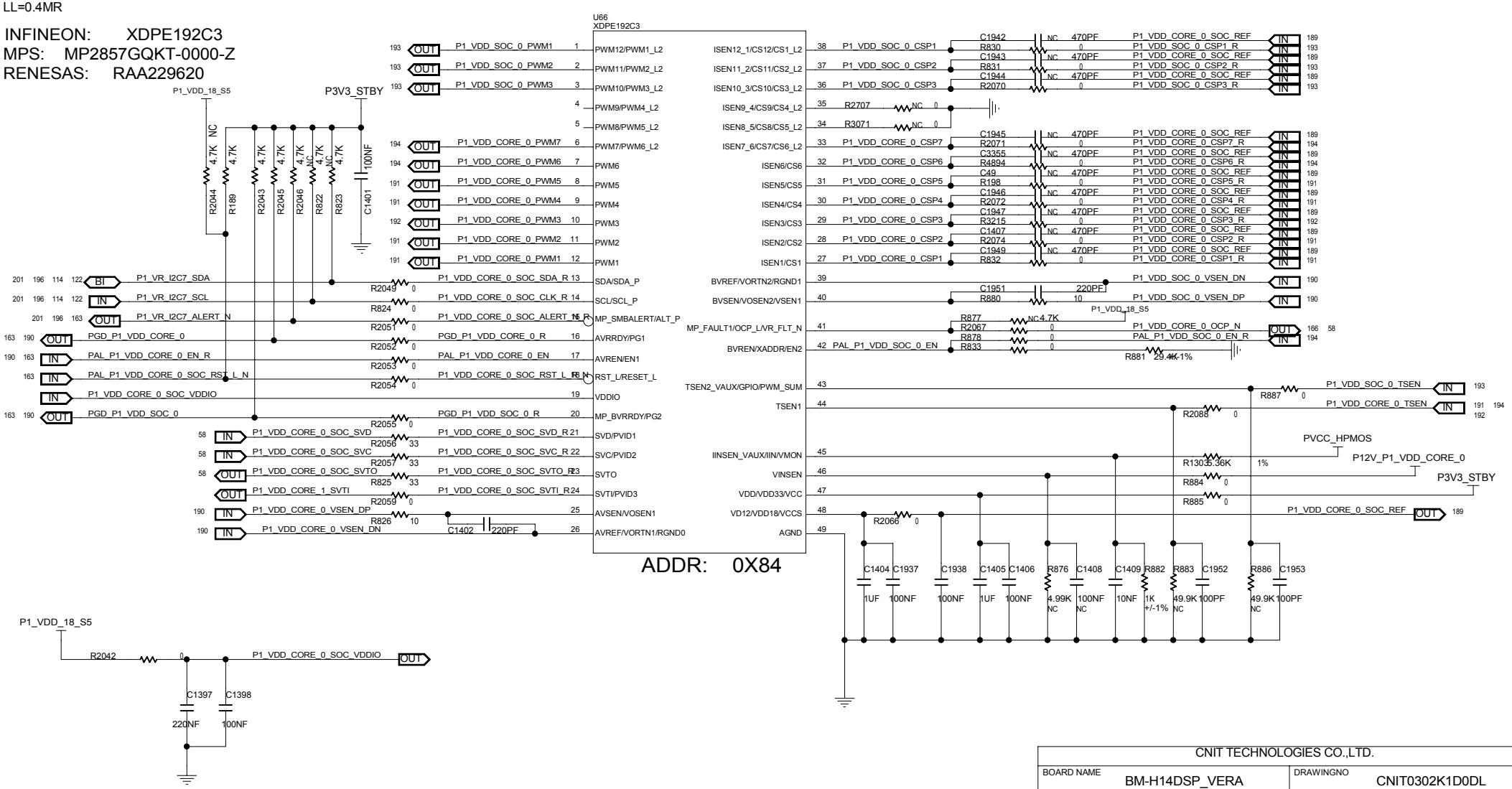

ADDR: 0X84

MODULE=---
FUNCTION=---

CNIT TECHNOLOGIES CO.,LTD.				
BOARD NAME BM-H14DSP_VERA			DRAWINGNO CNIT0302K1D0DL	
DESIGNED	ZHUHUI 00746	DATE 2024/10/22	SHEET 189 OF 276	REV
REVIEWED	GUBIN 00260	DATE 2024/11/22	Tue Dec 31 14:35:59 2024	

THIS DOCUMENT AND THE TECHNICAL DATA DISCLOSED ARE PROPRIETARY TO CNIT TECHNOLOGIES CO., LTD. AND SHALL NOT BE DUPLICATED USED RELEASED OR DISCLOSED WITHOUT EXPRESSING WRITTEN PERMISSION.

CPU1 CORE0

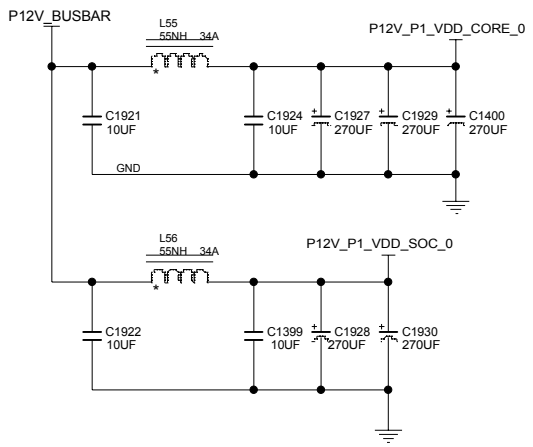

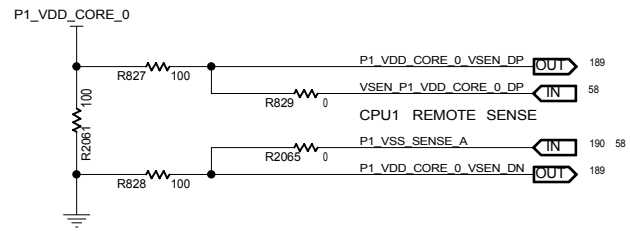

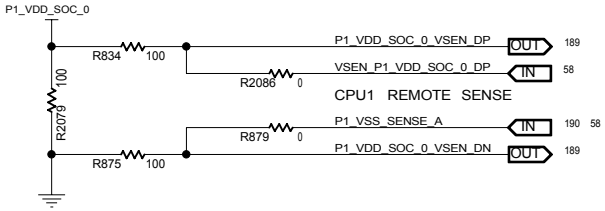

CAD NOTE: PLACE C1629/R1456 CLOSE TO U66

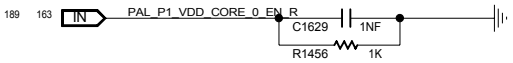

CAD NOTE: PLACE C1934/C1403 CLOSE TO CPLD

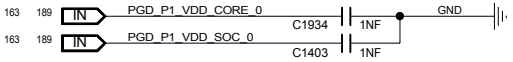

PART	R833	R881	ADDR
INFINEON	0R	29.4K	0X84
MPS	3.92K	0.3K	0X23
RENESAS	0R	1.65K	0X62

PIN	TSEN1/2	VINSEN	AVSEN	VCCS	CS	VINSEN	VINSEN	TSEN1	VCCS	CSX	CSX	VMON		
PART	C1952 C1953	C1408	C1402 C1951	C1404	C49, C1407 C1942 - C1947 C1949	R884	R876	R883	R2066	UNUSED R2707 R3071 R3072	R198 R830 - R832 R2070 - R2074	R1303	R882	C1409
INFINEON	100PF	NC	220PF	1UF	NC	0R	NC	NC	0R	NC	0R	5.36K	1K	10NF
MPS	10NF	1NF	NC	1UF	NC	75K	4.99K	49.9K	NC	NC	0R	15K	1K	NC
RENESAS	470PF	0.1UF	3.3NF	4.7UF	470PF	0R	NC	NC	0R	0R	100R	40.2K	10K	10NF

		VCC	EN	VREF	VO	SNUBBER		BOOT
	U19	R855	R857	C1161	R859	C1171	R863	R861
	U21	R865	R867	C1189	R869	C1199	R873	R871
	U20	R856	R858	C1162	R860	C1172	R864	R862
	U22	R866	R868	C1190	R870	C1200	R874	R872
INFINEON		1	0	NC	NC	NC	NC	0
MPS		2.2	2K	NC	NC	NC	NC	0
RENESAS		1	0	100NF	0	1NF	2	3.3

		VCC	EN	VREF	VO	SNUBBER		BOOT
	U15	R835	R837	C1105	R839	C1115	R843	R841
	U17	R845	R847	C1133	R849	C1142	R852	R851
	U16	R836	R838	C1106	R840	C1116	R844	R842
	U18	R846	R848	C1134	R850	C1145	R854	R853
INFINEON		1	0	NC	NC	NC	NC	0
MPS		2.2	2K	NC	NC	NC	NC	0
RENESAS		1	0	100NF	0	1NF	2	3.3

	VCC	EN	VREF	VO	SNUBBER		BOOT
U39	R3073	R3075	C2464	R3076	C2486	R3077	R3078
INFINEON	1	0	NC	NC	NC	NC	0
MPS	2.2	2K	NC	NC	NC	NC	0
RENESAS	1	0	100NF	0	1NF	2	3.3

MODULE=---

FUNCTION=---

CNIT TECHNOLOGIES CO.,LTD.

BOARD NAME	BM-H14DSP_VERA	DRAWINGNO	CNIT0302K1D0DL	
DESIGNED	ZHUHUI 00746	DATE 2024/10/22	SHEET 190 OF 276	REV
REVIEWED	GUBIN 00260	DATE 2024/11/22	Fri Dec 27 11:50:56 2024	

THIS DOCUMENT AND THE TECHNICAL DATA DISCLOSED ARE PROPRIETARY TO CNIT TECHNOLOGIES CO., LTD. AND SHALL NOT BE DUPLICATED USED RELEASED OR DISCLOSED WITHOUT EXPRESSING WRITTEN PERMISSION.

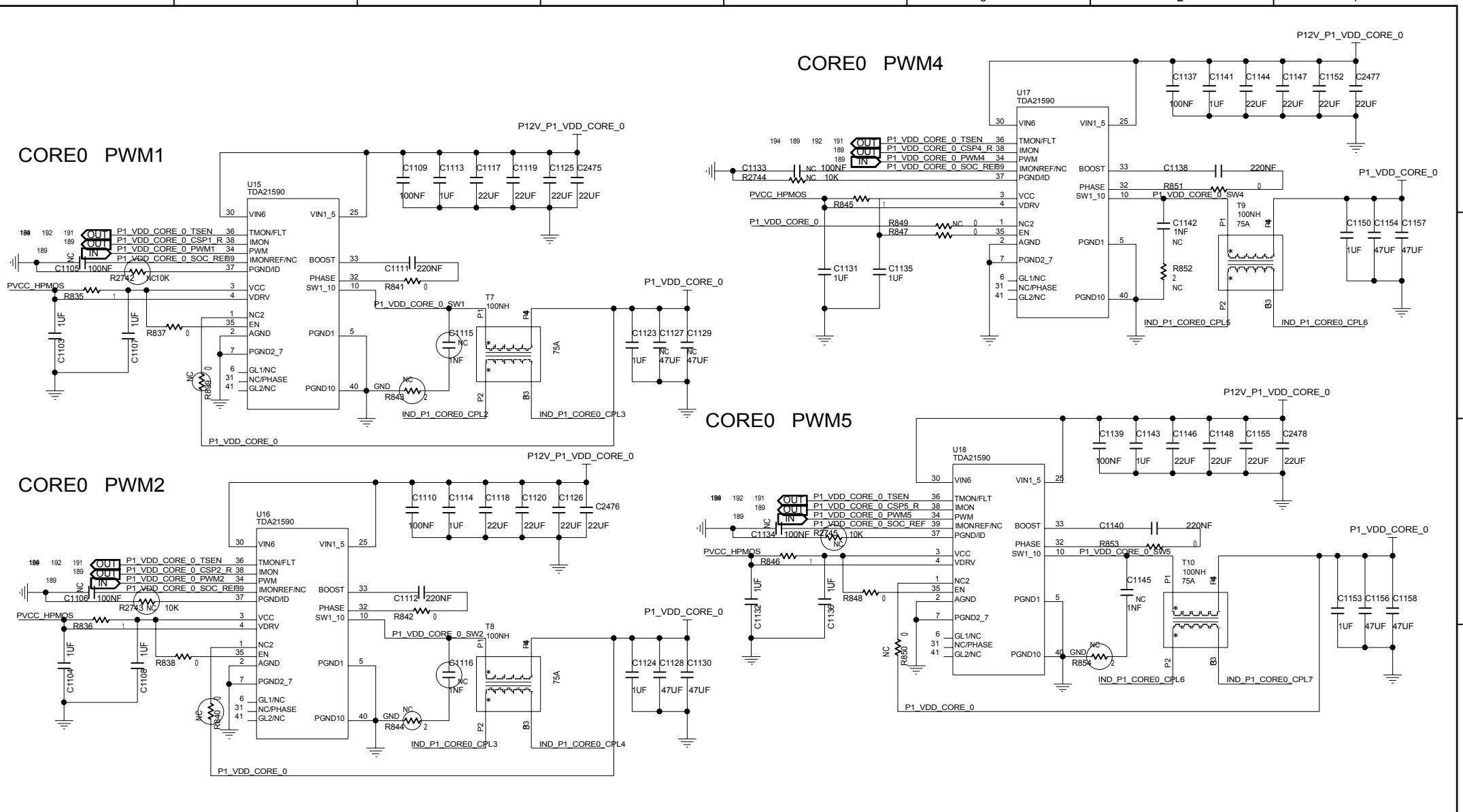

MODULE=---

FUNCTION=---

CNIT TECHNOLOGIES CO.,LTD.				
BOARD NAME BM-H14DSP_VERA			DRAWINGNO CNIT0302K1D0DL	
DESIGNED	ZHUHUI 00746	DATE 2024/10/22	SHEET 191 OF 276	REV
REVIEWED	GUBIN 00260	DATE 2024/11/22	Thu Jan 02 20:51:37 2025	

THIS DOCUMENT AND THE TECHNICAL DATA DISCLOSED ARE PROPRIETARY TO CNIT TECHNOLOGIES CO., LTD. AND SHALL NOT BE DUPLICATED USED RELEASED OR DISCLOSED WITHOUT EXPRESSING WRITTEN PERMISSION.

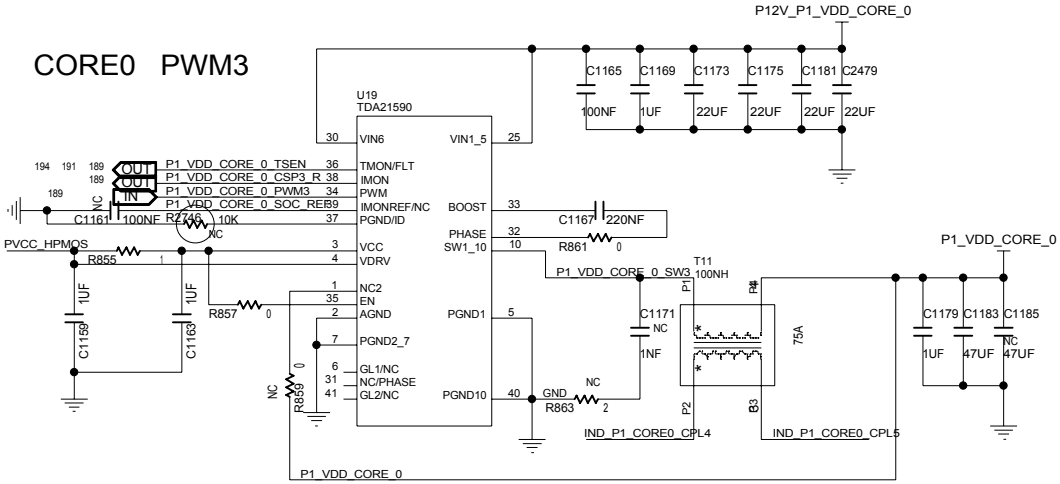

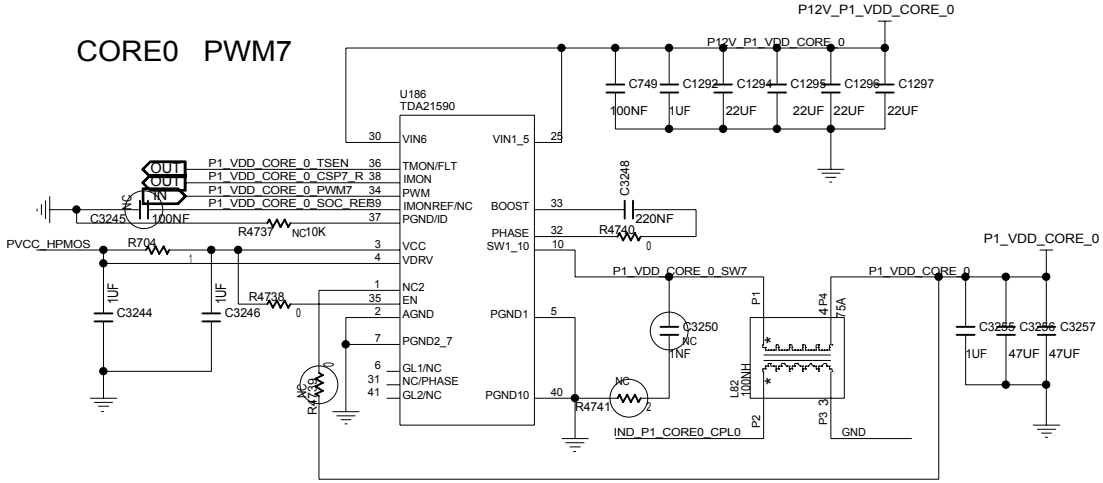

MODULE=---

FUNCTION=---

CNIT TECHNOLOGIES CO.,LTD.				
BOARD NAME BM-H14DSP_VERA			DRAWINGNO CNIT0302K1D0DL	
DESIGNED	ZHUHUI 00746	DATE 2024/10/22	SHEET 192 OF 276	REV
REVIEWED	GUBIN 00260	DATE 2024/11/22	Thu Jan 02 20:51:42 2025	

THIS DOCUMENT AND THE TECHNICAL DATA DISCLOSED ARE PROPRIETARY TO CNIT TECHNOLOGIES CO., LTD. AND SHALL NOT BE DUPLICATED USED RELEASED OR DISCLOSED WITHOUT EXPRESSING WRITTEN PERMISSION.

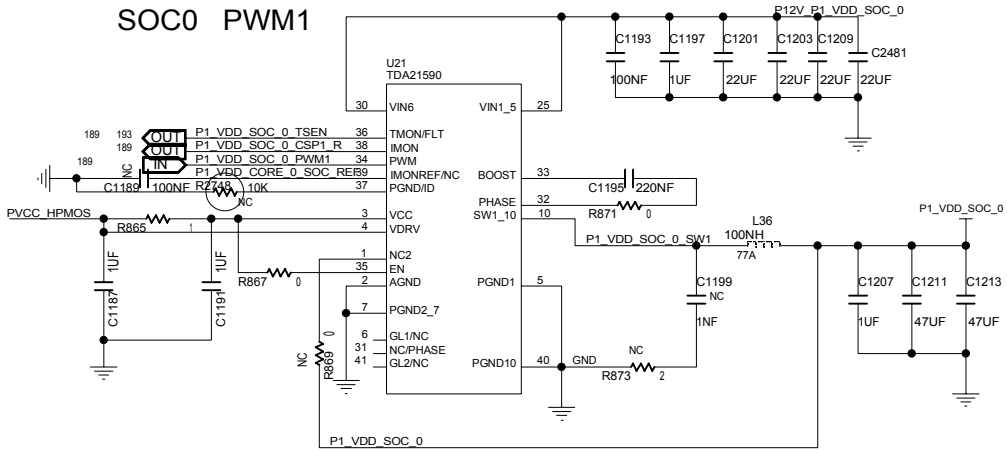

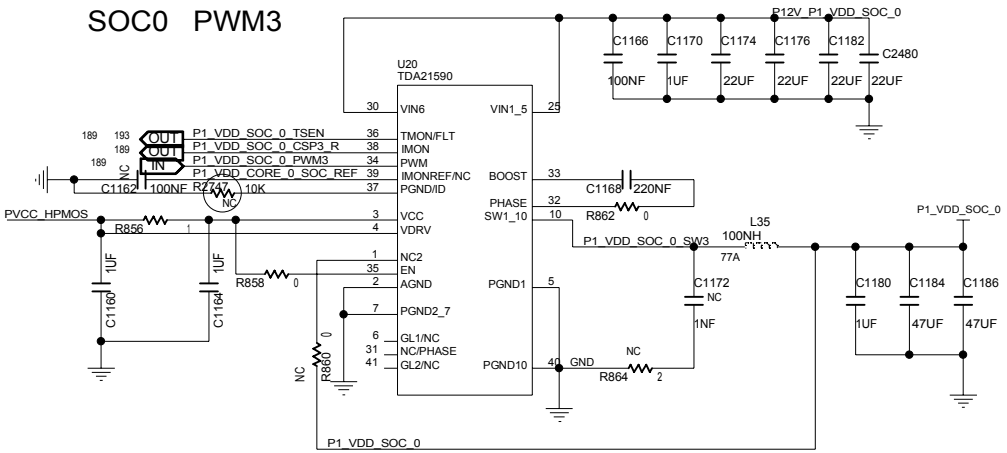

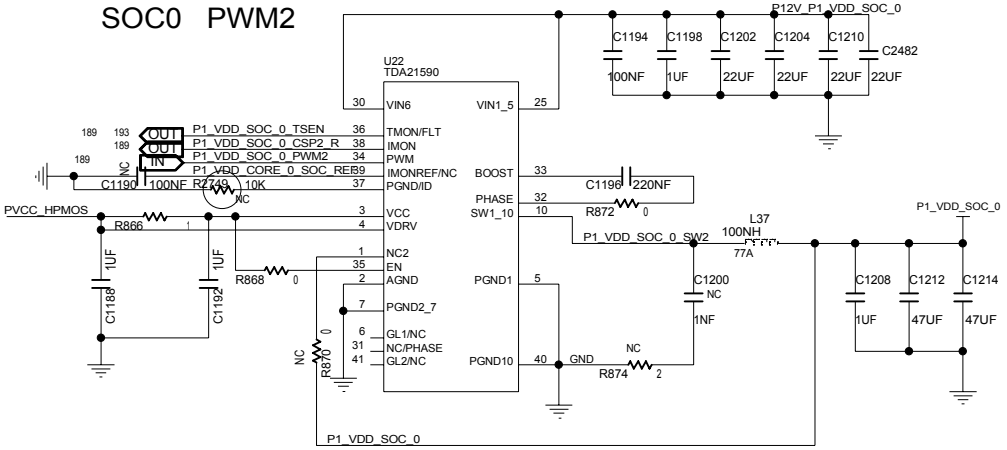

MODULE=---

FUNCTION=---

CNIT TECHNOLOGIES CO.,LTD.				
BOARD NAME BM-H14DSP_VERA			DRAWINGNO CNIT0302K1D0DL	
DESIGNED	ZHUHUI 00746	DATE 2024/10/22	SHEET 193 OF 276	REV
REVIEWED	GUBIN 00260	DATE 2024/11/22	Thu Jan 02 20:51:47 2025	

THIS DOCUMENT AND THE TECHNICAL DATA DISCLOSED ARE PROPRIETARY TO CNIT TECHNOLOGIES CO., LTD. AND SHALL NOT BE DUPLICATED USED RELEASED OR DISCLOSED WITHOUT EXPRESSING WRITTEN PERMISSION.

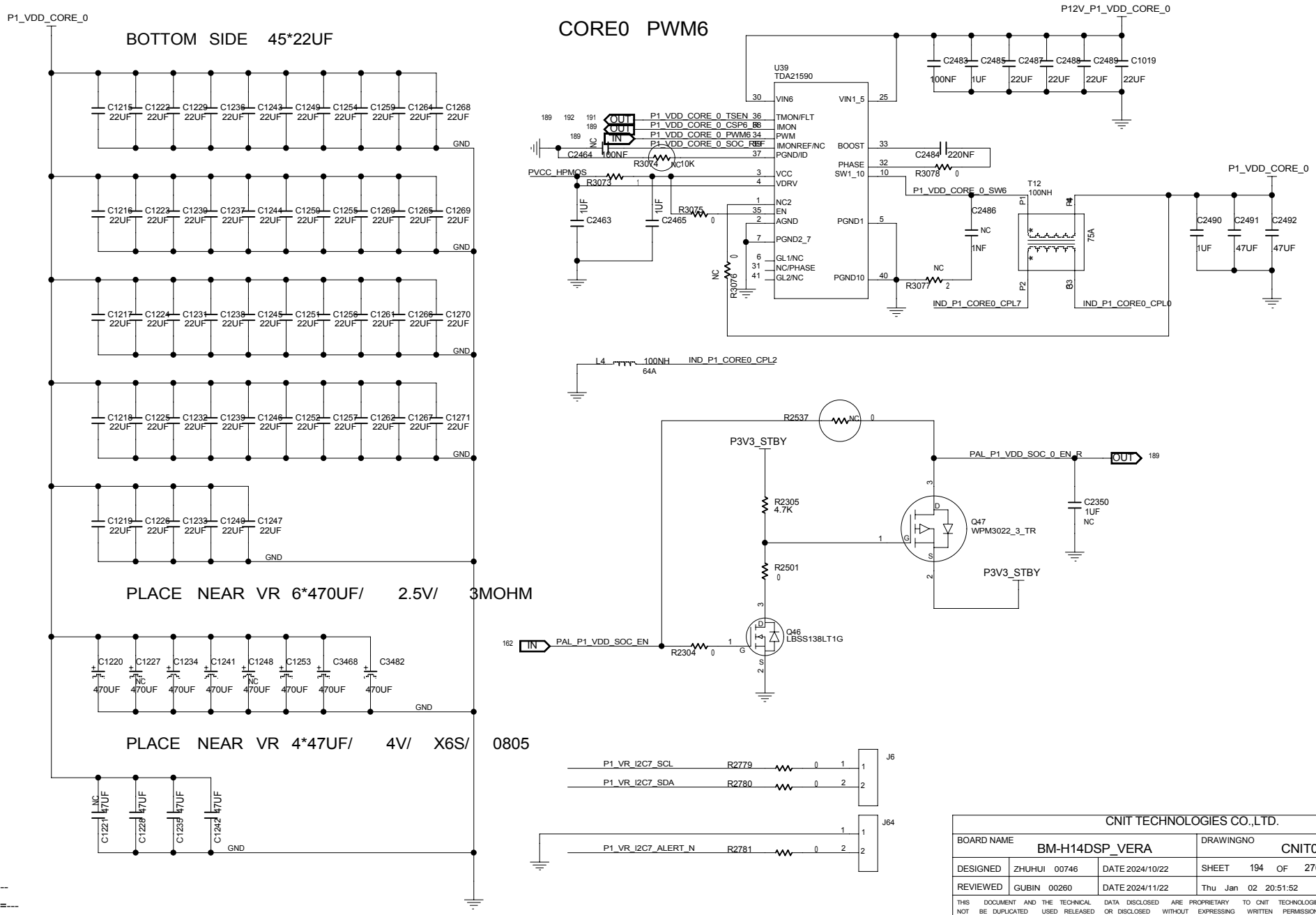

MODULE=---

FUNCTION=---

CNIT TECHNOLOGIES CO.,LTD.				
BOARD NAME BM-H14DSP_VERA			DRAWINGNO CNIT0302K1D0DL	
DESIGNED	ZHUHUI 00746	DATE 2024/10/22	SHEET 194 OF 276	REV
REVIEWED	GUBIN 00260	DATE 2024/11/22	Thu Jan 02 20:51:52 2025	

THIS DOCUMENT AND THE TECHNICAL DATA DISCLOSED ARE PROPRIETARY TO CNIT TECHNOLOGIES CO., LTD. AND SHALL NOT BE DUPLICATED USED RELEASED OR DISCLOSED WITHOUT EXPRESSING WRITTEN PERMISSION.

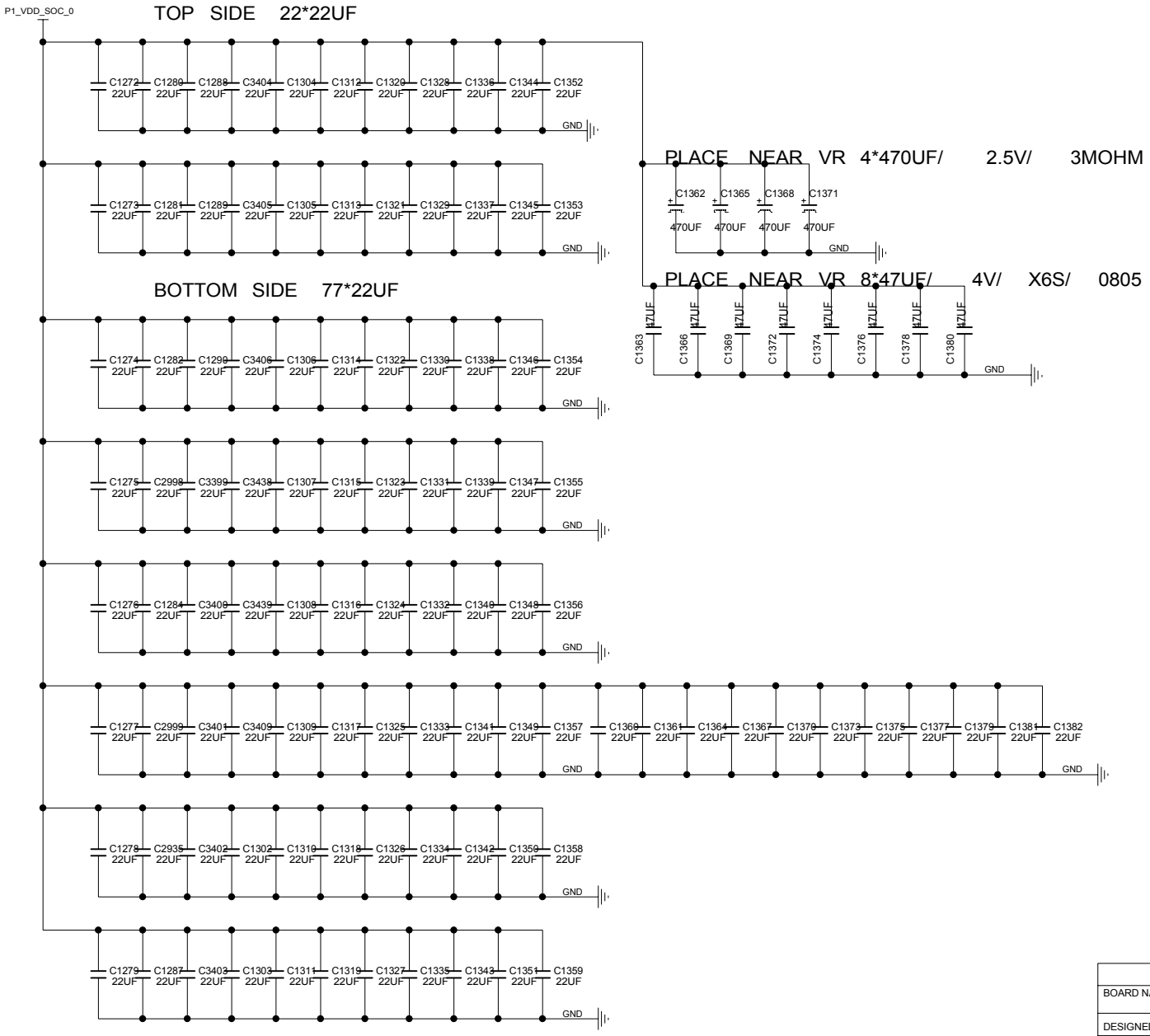

MODULE=---

FUNCTION=---

CNIT TECHNOLOGIES CO.,LTD.				
BOARD NAME BM-H14DSP_VERA			DRAWINGNO CNIT0302K1D0DL	
DESIGNED	ZHUHUI 00746	DATE 2024/10/22	SHEET 195 OF 276	REV
REVIEWED	GUBIN 00260	DATE 2024/11/22	Fri Dec 27 11:51:16 2024	

THIS DOCUMENT AND THE TECHNICAL DATA DISCLOSED ARE PROPRIETARY TO CNIT TECHNOLOGIES CO., LTD. AND SHALL NOT BE DUPLICATED USED RELEASED OR DISCLOSED WITHOUT EXPRESSING WRITTEN PERMISSION.

CPU1 CORE1

ADDR:0X94
COMPATIBLE IC:
INFINEON: XDPE192C3
MPS: MP2857GQKT-0000-Z
RENESAS: RAA229620
VBOOT=0.9V
ITDC=235A
IEDC=330A
LL=0.4MR

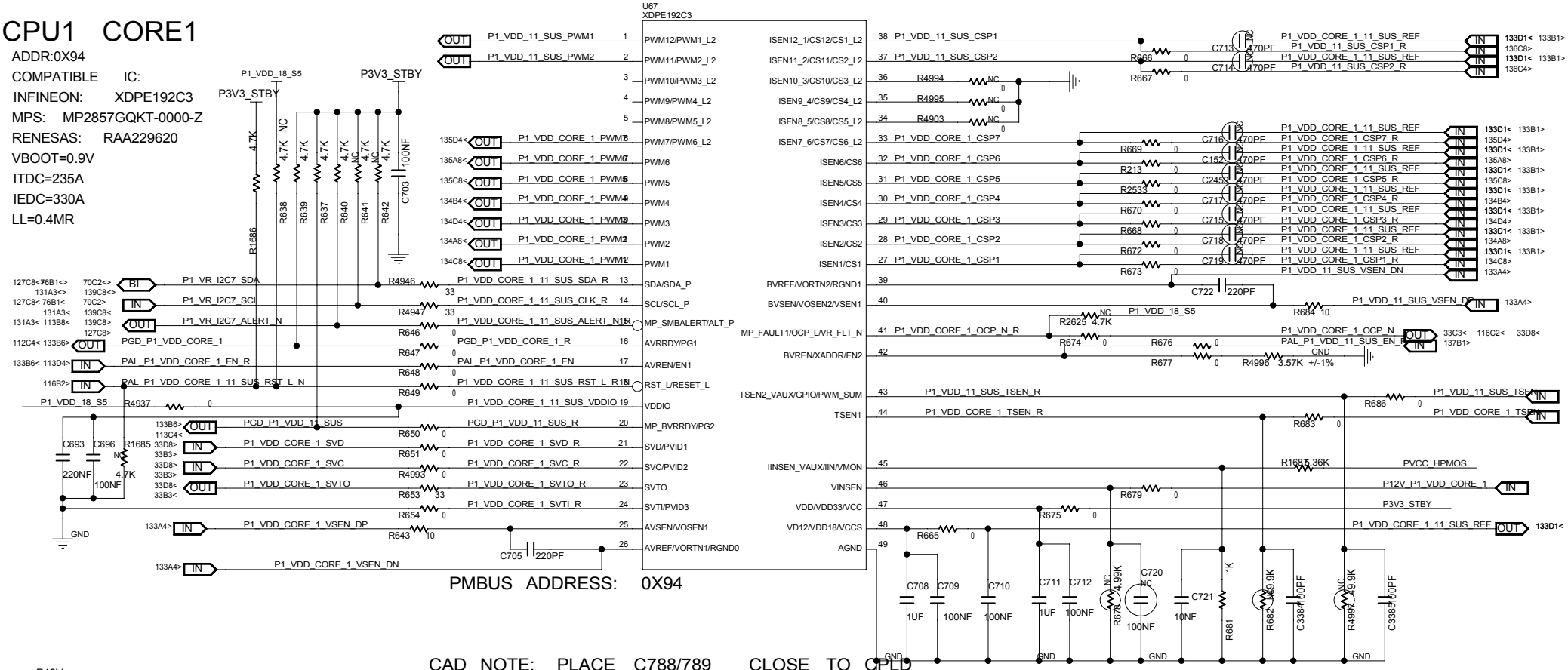

PMBUS ADDRESS: 0X94

CAD NOTE: PLACE C788/789 CLOSE TO CPLD

CAD NOTE: PLACE C1694/R1457 CLOSE TO U67

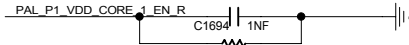

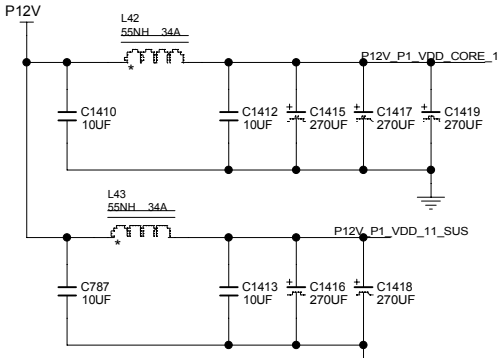

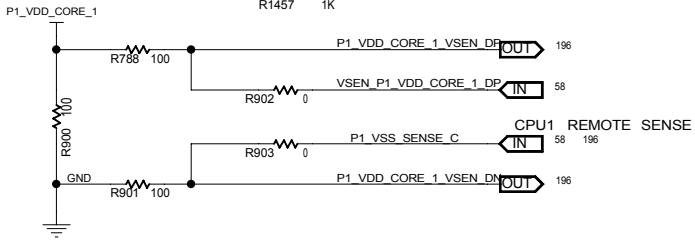

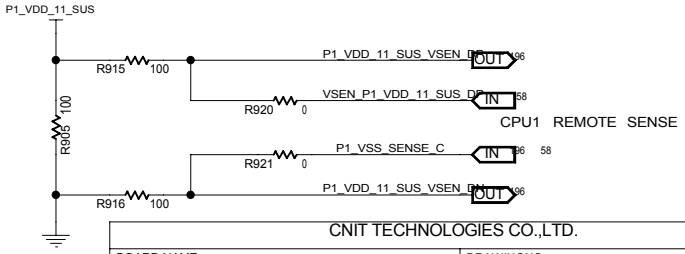

MODULE=---
FUNCTION=---

CNIT TECHNOLOGIES CO.,LTD.				
BOARD NAME BM-H14DSP_VERA			DRAWINGNO CNIT0302K1D0DL	
DESIGNED	ZHUHUI 00746	DATE 2024/10/22	SHEET 196 OF 276	REV
REVIEWED	GUBIN 00260	DATE 2024/11/22	Tue Dec 31 14:35:27 2024	

THIS DOCUMENT AND THE TECHNICAL DATA DISCLOSED ARE PROPRIETARY TO CNIT TECHNOLOGIES CO., LTD. AND SHALL NOT BE DUPLICATED USED RELEASED OR DISCLOSED WITHOUT EXPRESSING WRITTEN PERMISSION.

CPU1 CORE1

	VCC	EN	VREF	VO	SNUBBER		BOOT
U23	R929	R931	C1437	R933	C1446	R936	R934
U25	R716	R939	C1455	R719	C1464	R944	R942
U24	R930	R932	C1438	R718	C1447	R937	R935
U26	R938	R940	C1456	R941	C1530	R945	R943
INFINEON	1	0	NC	NC	NC	NC	0
MPS	2.2	2K	NC	NC	NC	NC	0
RENESAS	1	0	100NF	0	1NF	2	3.3

CORE1 PWM1

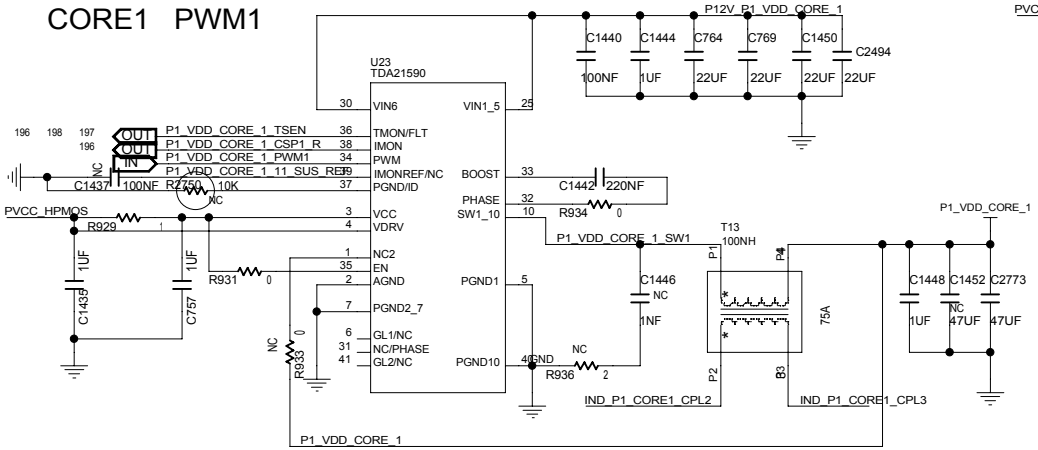

CORE1 PWM4

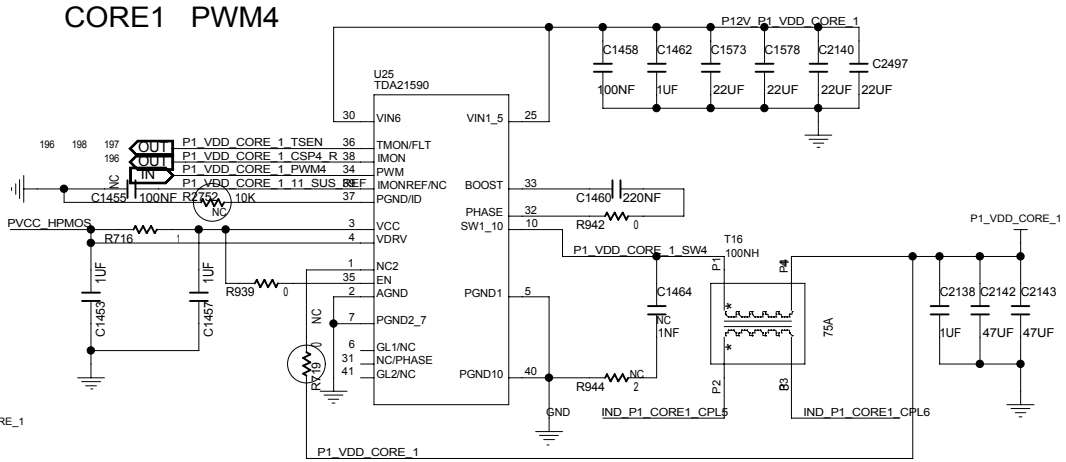

CORE1 PWM5

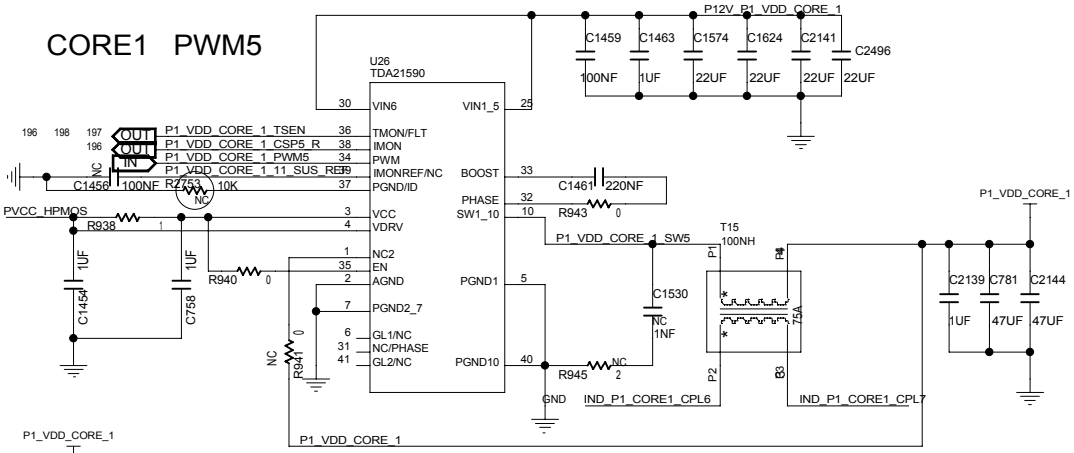

CORE1 PWM2

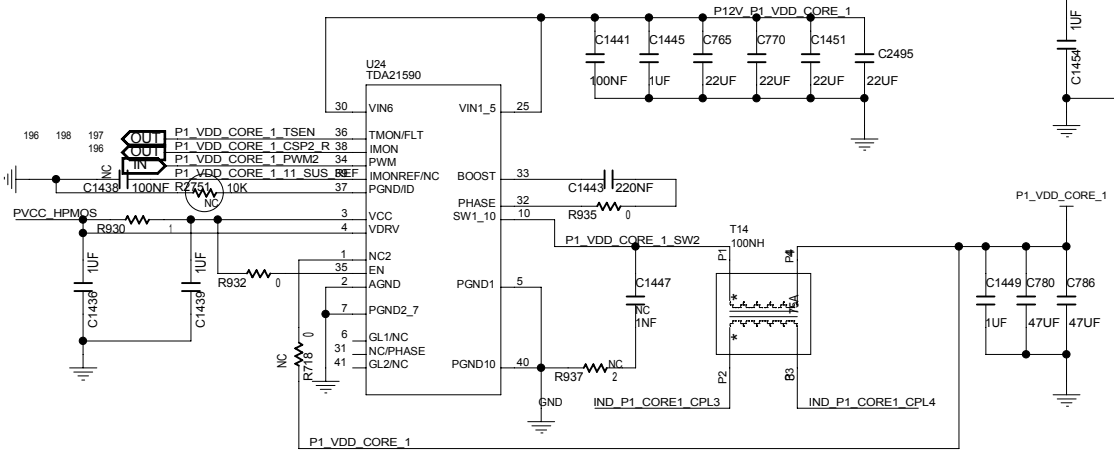

MODULE=---

FUNCTION=---

CNIT TECHNOLOGIES CO.,LTD.				
BOARD NAME	BM-H14DSP_VERA		DRAWINGNO	CNIT0302K1D0DL
DESIGNED	ZHUHUI 00746	DATE 2024/10/22	SHEET 197 OF 276	REV
REVIEWED	GUBIN 00260	DATE 2024/11/22	Thu Jan 02 20:51:57 2025	

THIS DOCUMENT AND THE TECHNICAL DATA DISCLOSED ARE PROPRIETARY TO CNIT TECHNOLOGIES CO., LTD. AND SHALL NOT BE DUPLICATED USED RELEASED OR DISCLOSED WITHOUT EXPRESSING WRITTEN PERMISSION.

	VCC	EN	VREF	VO	SNUBBER		BOOT
U27	R946	R948	C1467	R950	C1477	R954	R952
U40	R3079	R3081	C2467	R2706	C2504	R3082	R3083
U28	R947	R949	C1468	R951	C1478	R955	R953
U29	R956	R957	C1494	R958	C1499	R960	R959
INFINEON	1	0	NC	NC	NC	NC	0
MPS	2.2	2K	NC	NC	NC	NC	0
RENESAS	1	0	100NF	0	1NF	2	3.3

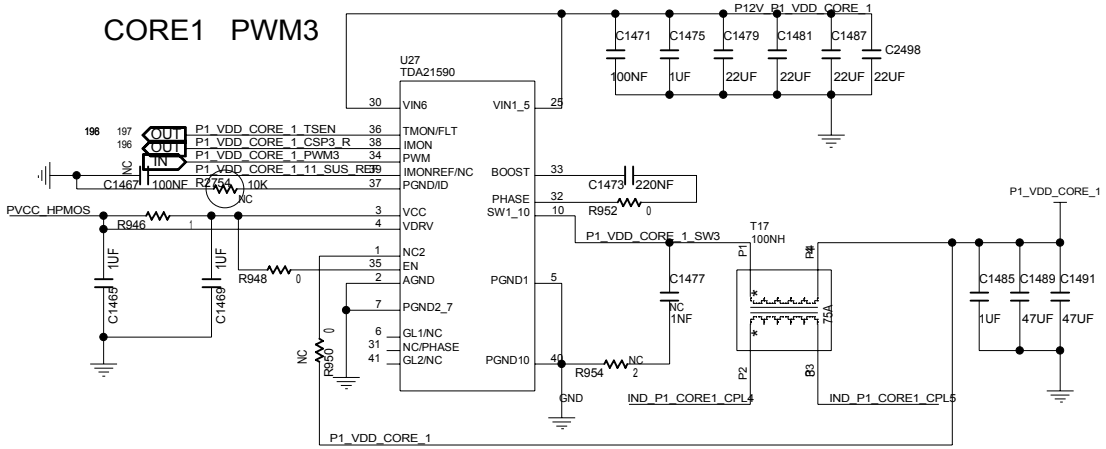

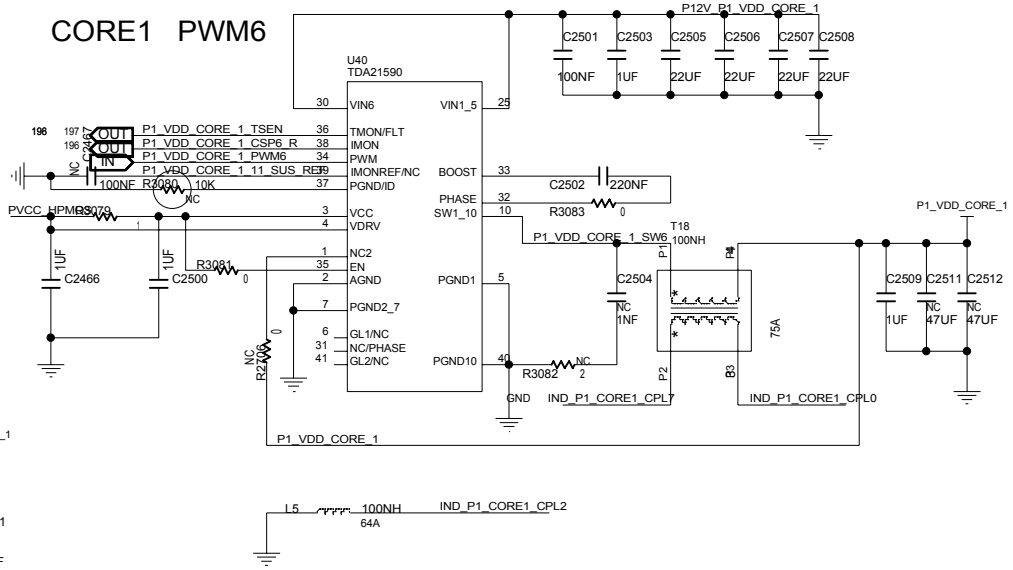

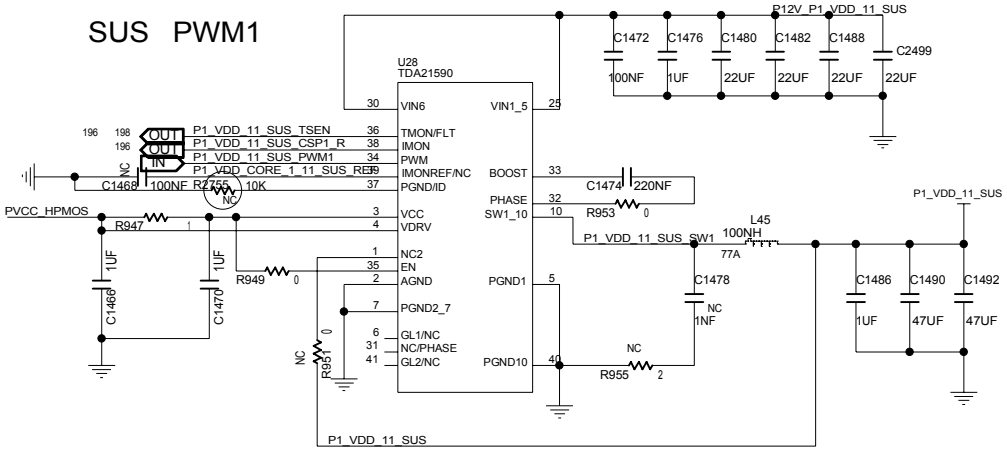

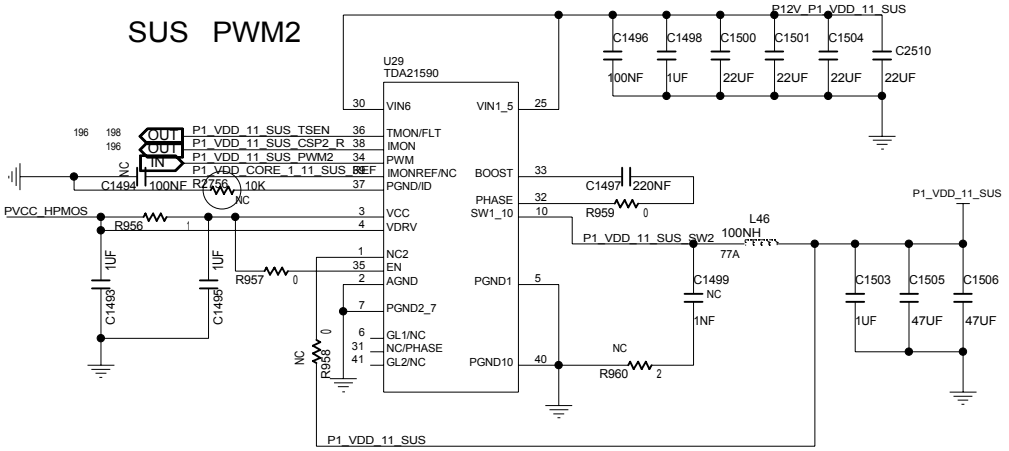

MODULE=---

FUNCTION=---

CNIT TECHNOLOGIES CO.,LTD.				
BOARD NAME	BM-H14DSP_VERA		DRAWINGNO	CNIT0302K1D0DL
DESIGNED	ZHUHUI 00746	DATE 2024/10/22	SHEET 198 OF 276	REV
REVIEWED	GUBIN 00260	DATE 2024/11/22	Thu Jan 02 20:52:02 2025	

THIS DOCUMENT AND THE TECHNICAL DATA DISCLOSED ARE PROPRIETARY TO CNIT TECHNOLOGIES CO., LTD. AND SHALL NOT BE DUPLICATED USED RELEASED OR DISCLOSED WITHOUT EXPRESSING WRITTEN PERMISSION.

CPU1 CORE1

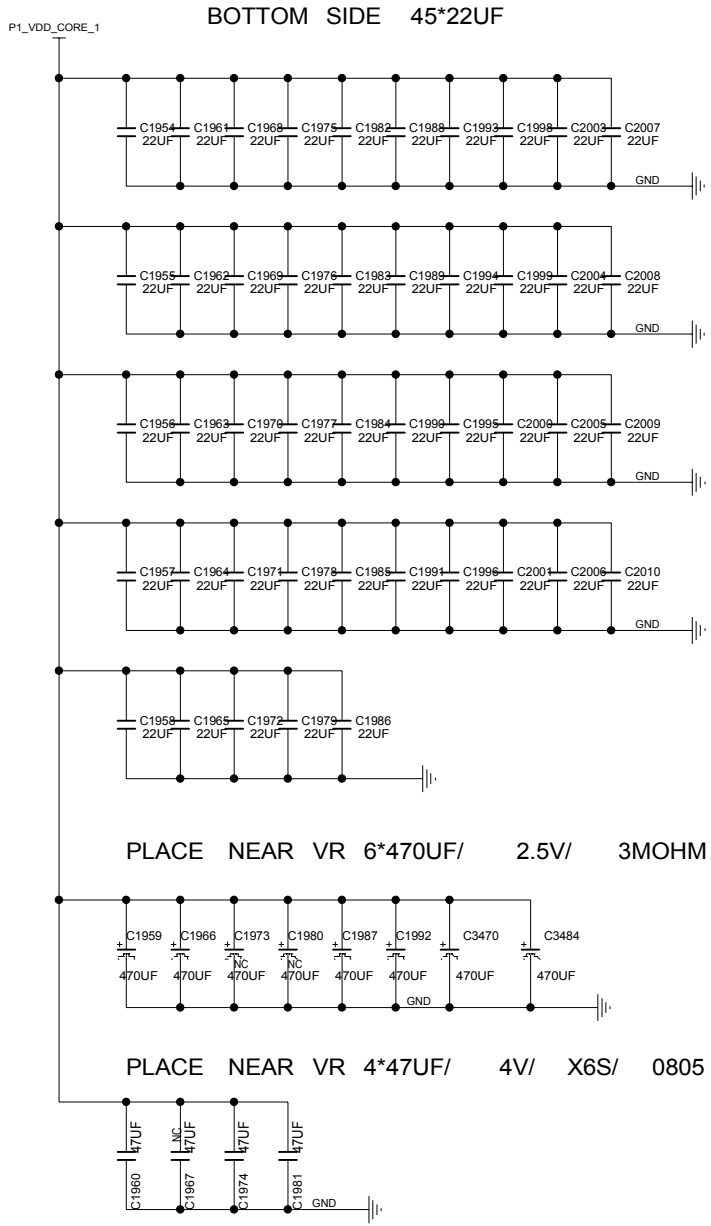

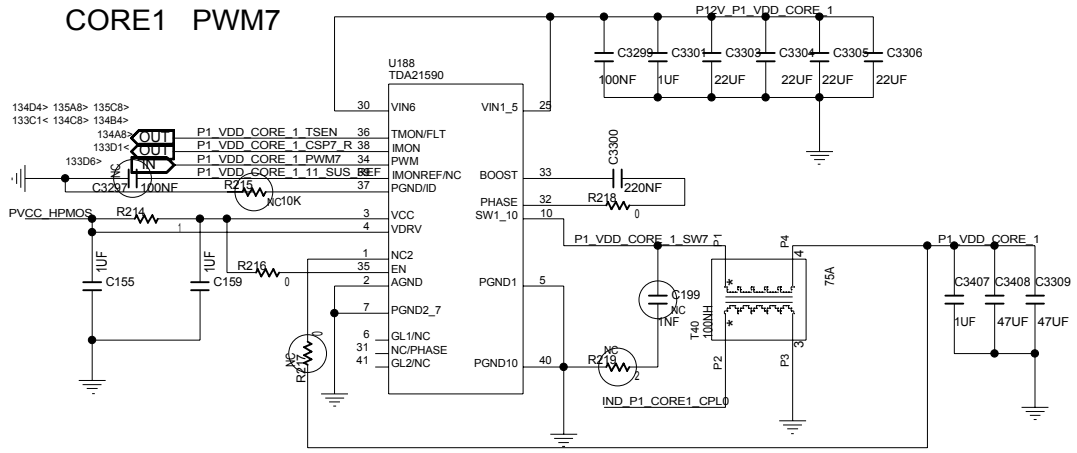

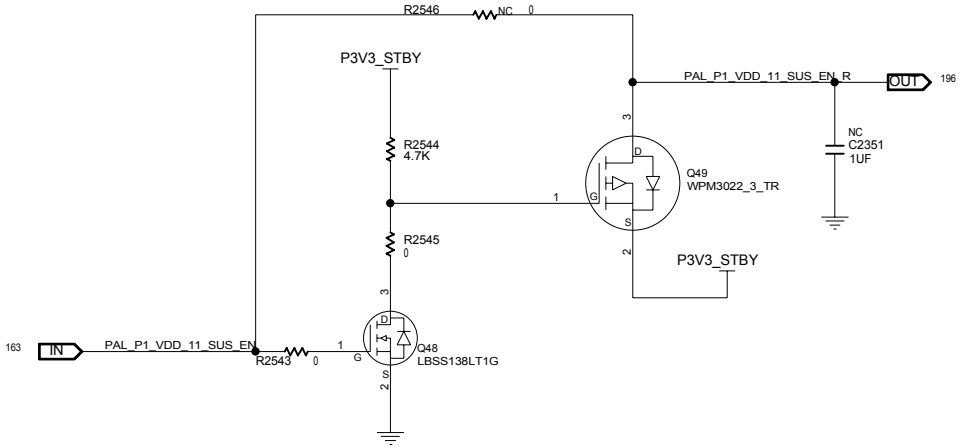

MODULE=---

FUNCTION=---

CNIT TECHNOLOGIES CO.,LTD.				
BOARD NAME BM-H14DSP_VERA			DRAWINGNO CNIT0302K1D0DL	
DESIGNED	ZHUHUI 00746	DATE 2024/10/22	SHEET 199 OF 276	REV
REVIEWED	GUBIN 00260	DATE 2024/11/22	Thu Jan 02 20:52:07 2025	

THIS DOCUMENT AND THE TECHNICAL DATA DISCLOSED ARE PROPRIETARY TO CNIT TECHNOLOGIES CO., LTD. AND SHALL NOT BE DUPLICATED USED RELEASED OR DISCLOSED WITHOUT EXPRESSING WRITTEN PERMISSION.

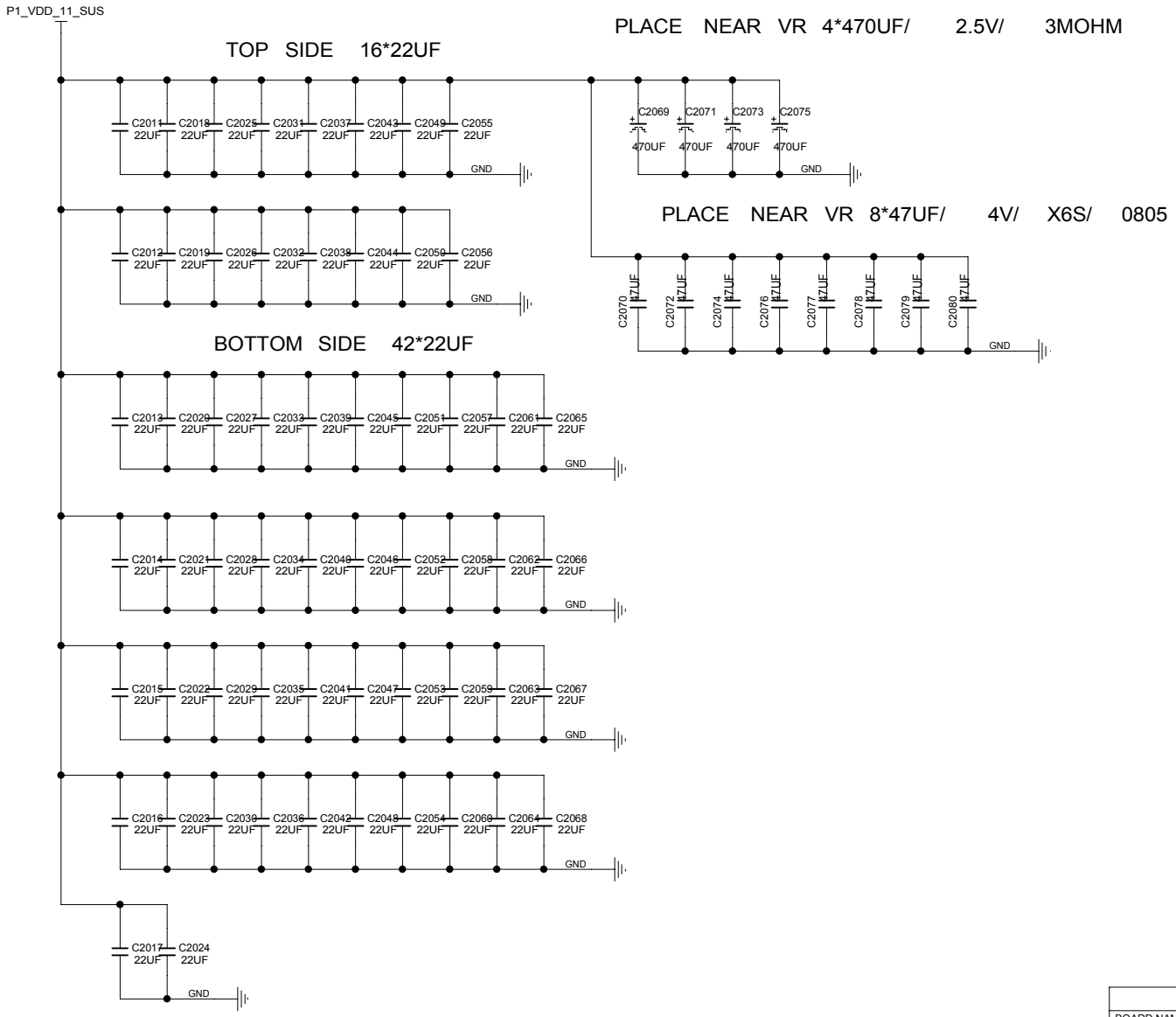

MODULE=---

FUNCTION=---

CNIT TECHNOLOGIES CO.,LTD.				
BOARD NAME BM-H14DSP_VERA			DRAWINGNO CNIT0302K1D0DL	
DESIGNED	ZHUHUI 00746	DATE 2024/10/22	SHEET 200 OF 276	REV
REVIEWED	GUBIN 00260	DATE 2024/11/22	Fri Dec 27 11:51:41 2024	

THIS DOCUMENT AND THE TECHNICAL DATA DISCLOSED ARE PROPRIETARY TO CNIT TECHNOLOGIES CO., LTD. AND SHALL NOT BE DUPLICATED USED RELEASED OR DISCLOSED WITHOUT EXPRESSING WRITTEN PERMISSION.

CPU1 VDDIO

PMBUS ADDRESS: 0X80

ADDR:0X80
COMPATIBLE IC:
INFINEON: XDPE19283A
MPS: MP2856
RENESAS: RAA229621
VBOOT=0.9V
ITDC=120A
IEDC=140A
LL=0.4MR

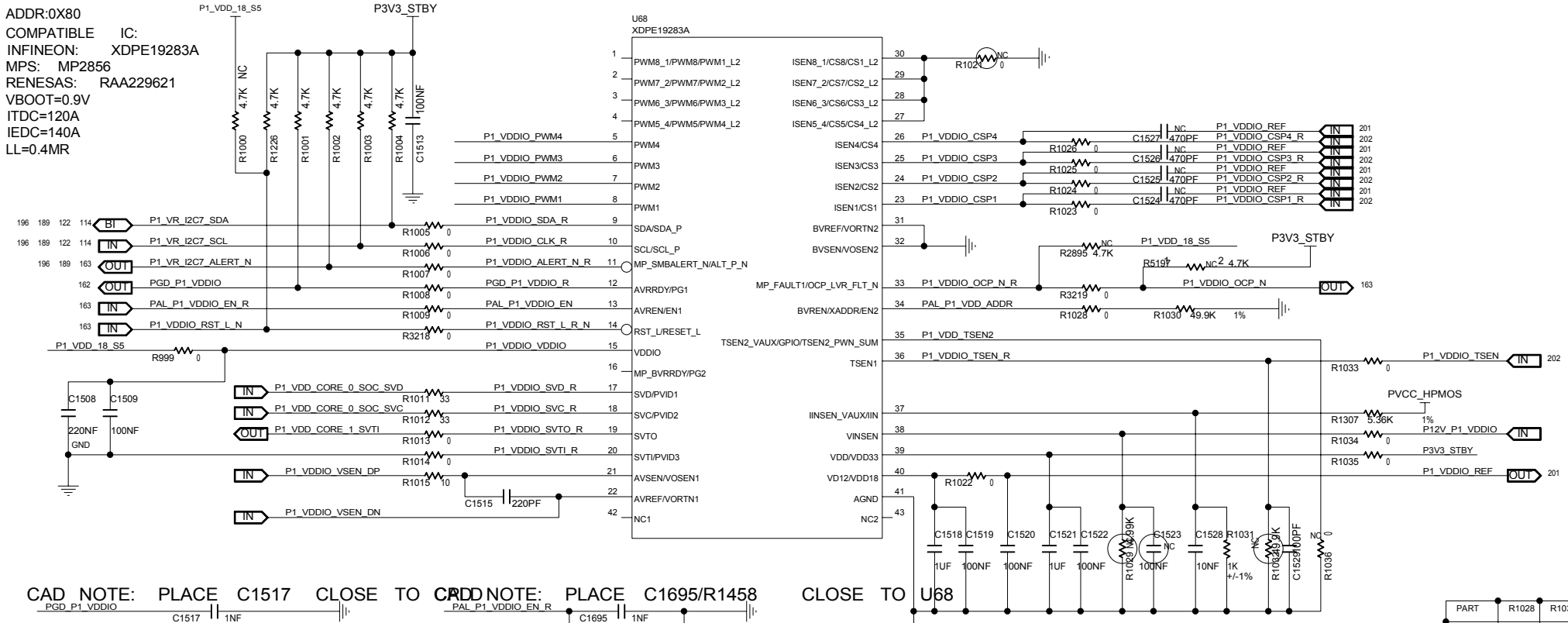

CAD NOTE: PLACE C1517 CLOSE TO CPU1

CAD NOTE: PLACE C1695/R1458 CLOSE TO U68

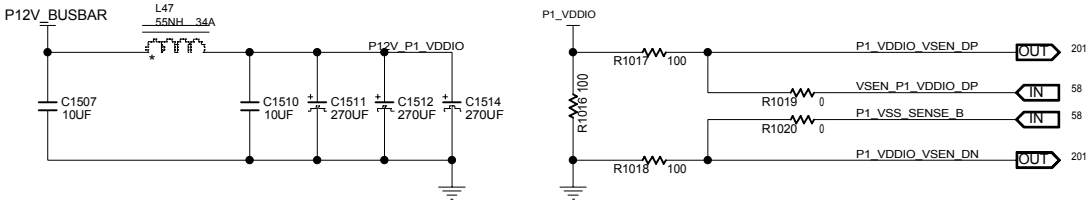

PART	R1028	R1030	ADDR
INFINEON	0R	49.9K	0X80
MPS	25.5K	1.5K	0X2A
RENESAS	5.6K	1.05K	0X72

CPU1 REMOTE SENSE

PIN	TSEN1/2	VINSEN	AVSEN	VCCS	CSX	VINSEN	VINSEN	TSEN1	VCCS	CSX UNUSED	CSX
PART	C1529	C1523	C1515	C1518	C1524 - C1527	R1034	R1029	R1032	R1022	R1021	R1023 - R1026
INFINEON	100PF	NC	220PF	1UF	NC	0R	NC	NC	0R	NC	0R
MPS	10NF	1NF	NC	1UF	NC	75K	4.99K	49.9K	NC	NC	0R
RENESAS	470PF	0.1UF	3.3NF	4.7UF	470PF	0R	NC	NC	0R	0R	100R

MODULE=---
FUNCTION=---

CNIT TECHNOLOGIES CO.,LTD.				
BOARD NAME	BM-H14DSP_VERA		DRAWINGNO	CNIT0302K1D0DL
DESIGNED	ZHUHUI 00746	DATE 2024/10/22	SHEET 201 OF 276	REV
REVIEWED	GUBIN 00260	DATE 2024/11/22	Tue Dec 31 17:16:35 2024	

THIS DOCUMENT AND THE TECHNICAL DATA DISCLOSED ARE PROPRIETARY TO CNIT TECHNOLOGIES CO., LTD. AND SHALL NOT BE DUPLICATED USED RELEASED OR DISCLOSED WITHOUT EXPRESSING WRITTEN PERMISSION.

CPU1 VDDIO

	VCC	EN	VREF	VO	SNUBBER		BOOT
U30	R2092	R2115	C2082	R2096	C2092	R2099	R2098
U32	R2102	R2104	C2110	R2106	C2119	R2109	R2108
U31	R2093	R2095	C2083	R2097	C2093	R2101	R2100
U33	R2103	R2105	C2111	R2107	C2122	R2111	R2110
INFINEON	1	0	NC	NC	NC	NC	0
MPS	2.2	2K	NC	NC	NC	NC	0
RENESAS	1	0	100NF	0	1NF	2	3.3

VDDIO PWM1

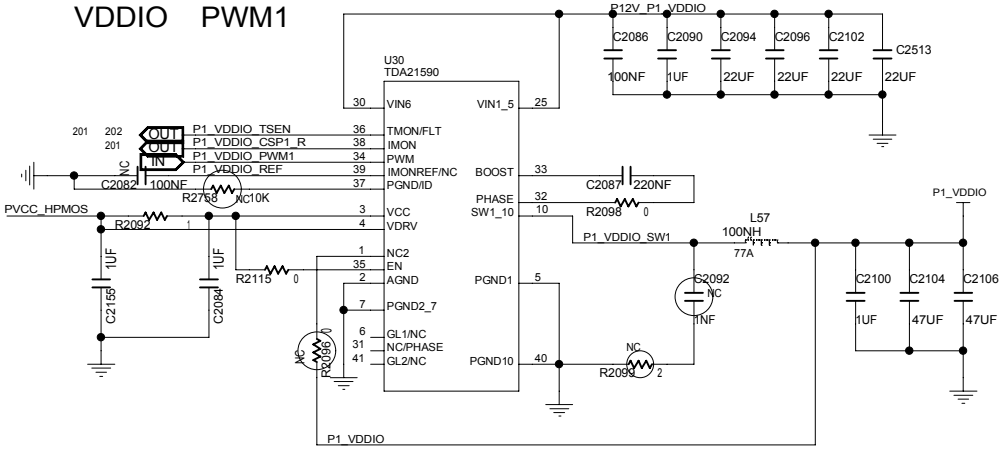

VDDIO PWM2

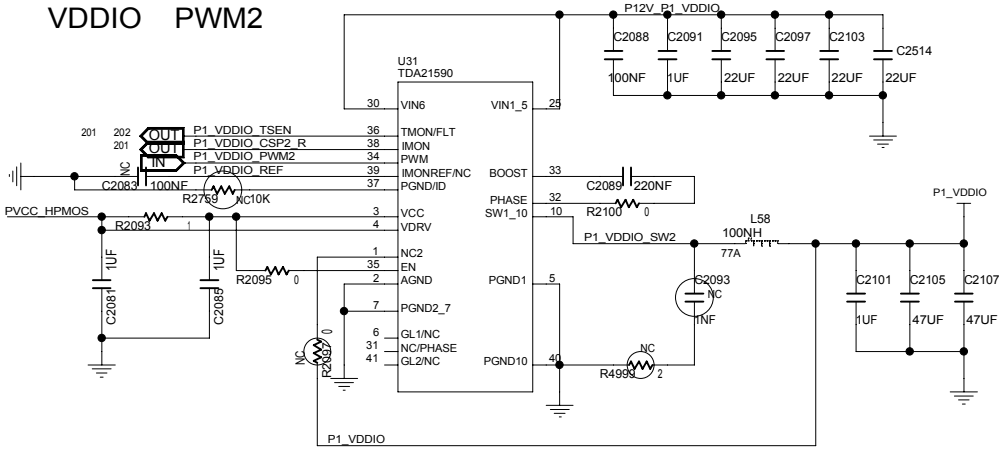

VDDIO PWM3

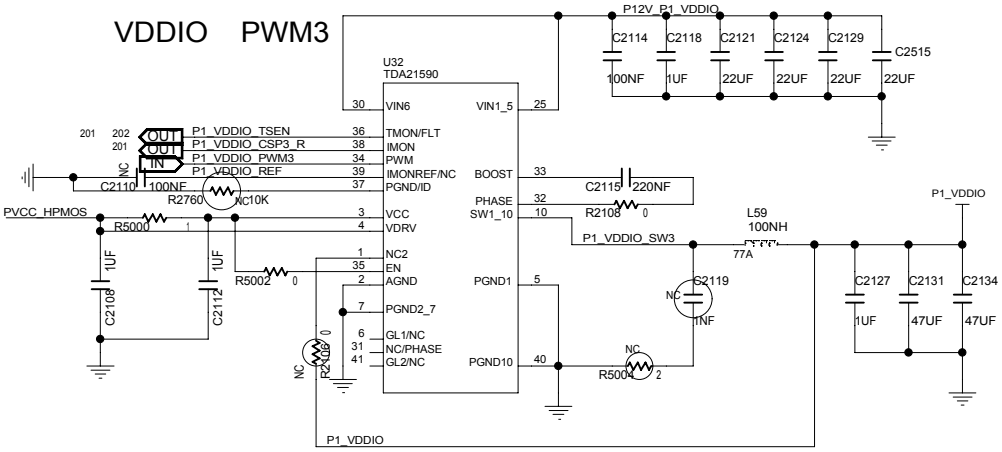

VDDIO PWM4

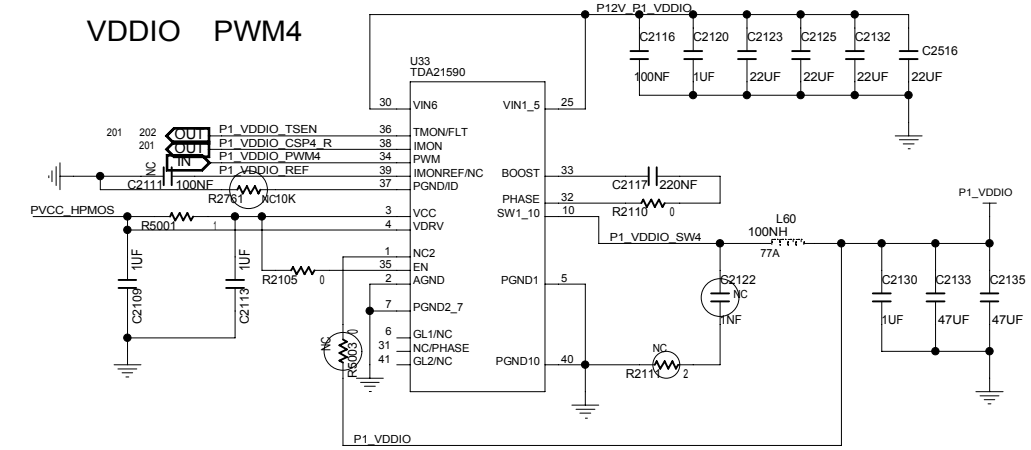

MODULE=---

FUNCTION=---

CNIT TECHNOLOGIES CO.,LTD.				
BOARD NAME BM-H14DSP_VERA			DRAWINGNO CNIT0302K1D0DL	
DESIGNED	ZHUHUI 00746	DATE 2024/10/22	SHEET 202 OF 276	REV
REVIEWED	GUBIN 00260	DATE 2024/11/22	Thu Jan 02 20:52:12 2025	

THIS DOCUMENT AND THE TECHNICAL DATA DISCLOSED ARE PROPRIETARY TO CNIT TECHNOLOGIES CO., LTD. AND SHALL NOT BE DUPLICATED USED RELEASED OR DISCLOSED WITHOUT EXPRESSING WRITTEN PERMISSION.

CPU1 VDDIO

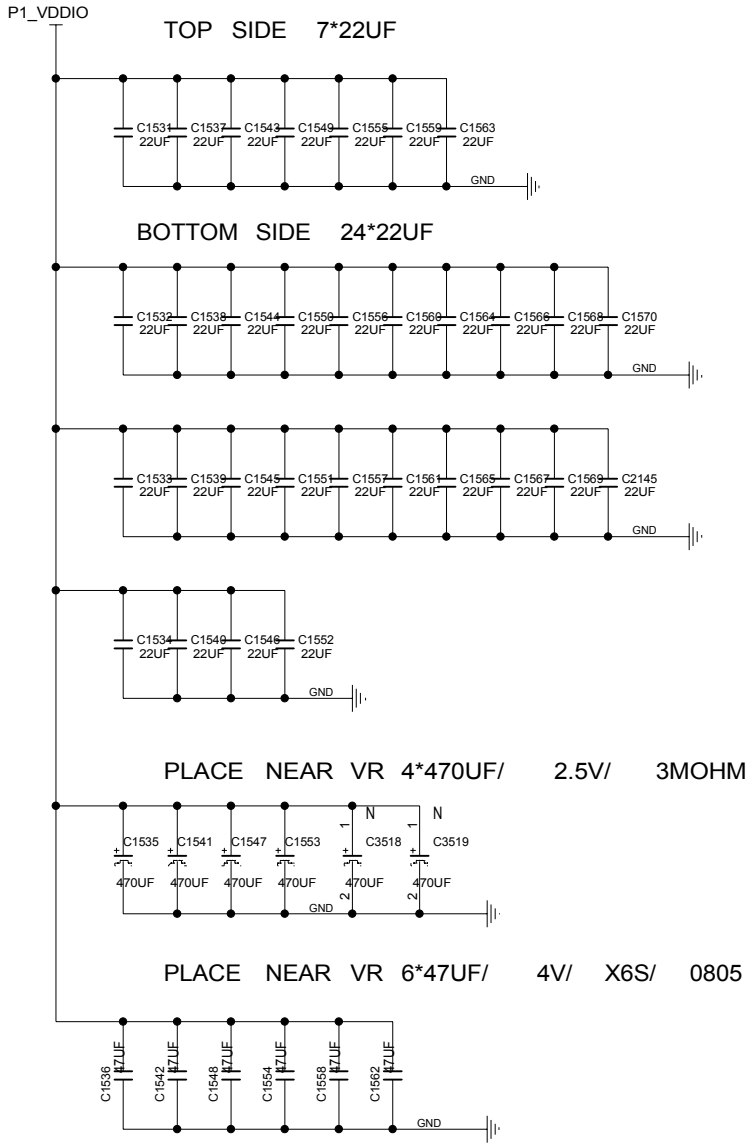

MODULE=---

FUNCTION=---

CNIT TECHNOLOGIES CO.,LTD.				
BOARD NAME BM-H14DSP_VERA			DRAWINGNO CNIT0302K1D0DL	
DESIGNED	ZHUHUI 00746	DATE 2024/10/22	SHEET 203 OF 276	REV
REVIEWED	GUBIN 00260	DATE 2024/11/22	Mon Apr 21 09:48:33 2025	

THIS DOCUMENT AND THE TECHNICAL DATA DISCLOSED ARE PROPRIETARY TO CNIT TECHNOLOGIES CO., LTD. AND SHALL NOT BE DUPLICATED USED RELEASED OR DISCLOSED WITHOUT EXPRESSING WRITTEN PERMISSION.

MPQ8633B

VIN=12V, VOUT=1.8V

CPU0 VDD_18_S5&VDDIO_AUDIO

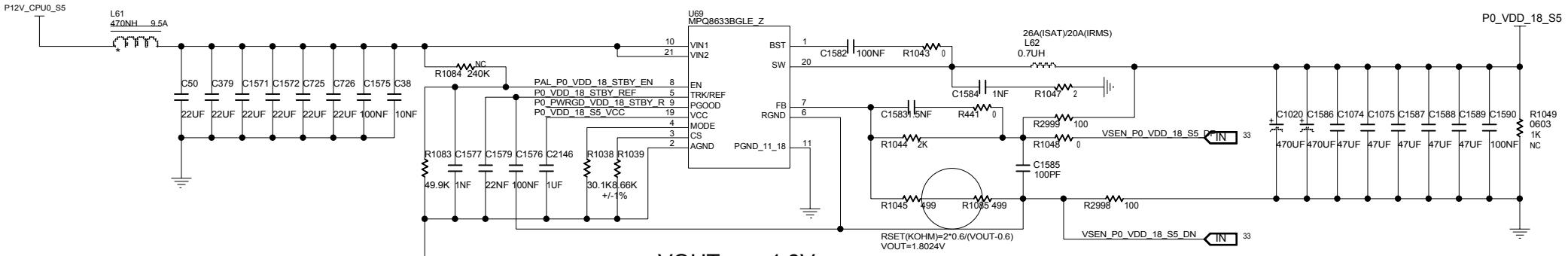

VOUT = 1.8V
IOUT TDC = 11A
OCP = 16.5A
FSW = 800KHZ
VFB = 0.6V
TSS = 2MS

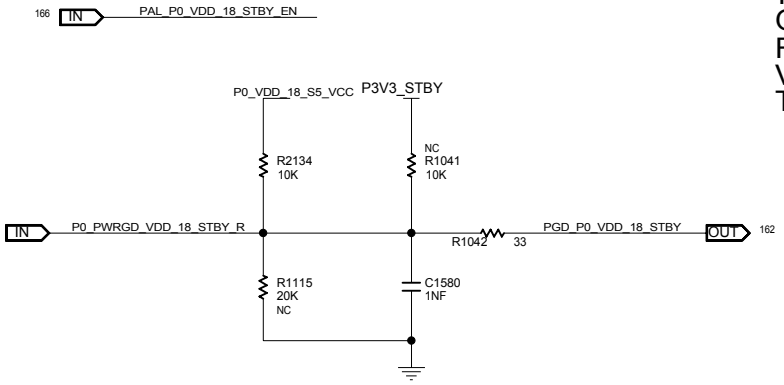

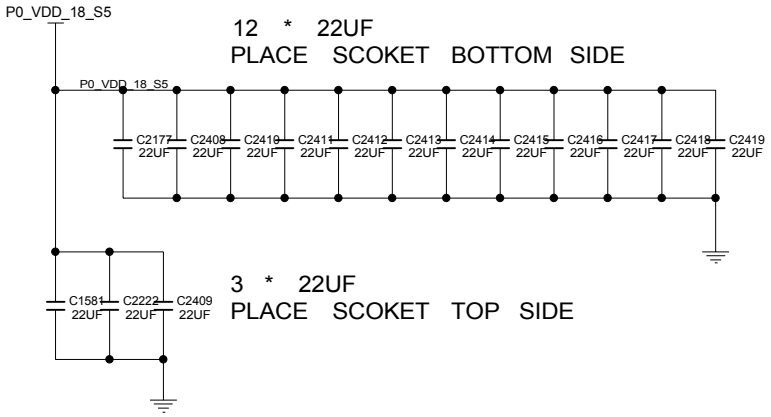

12 * 22UF
PLACE SCOKET BOTTOM SIDE

3 * 22UF
PLACE SCOKET TOP SIDE

MODULE=---
FUNCTION=---

CNIT TECHNOLOGIES CO.,LTD.				
BOARD NAME BM-H14DSP_VERA			DRAWINGNO CNIT0302K1D0DL	
DESIGNED	ZHUHUI 00746	DATE 2024/10/22	SHEET 204 OF 276	REV
REVIEWED	GUBIN 00260	DATE 2024/11/22	Thu Jan 02 20:52:17 2025	

THIS DOCUMENT AND THE TECHNICAL DATA DISCLOSED ARE PROPRIETARY TO CNIT TECHNOLOGIES CO., LTD. AND SHALL NOT BE DUPLICATED USED RELEASED OR DISCLOSED WITHOUT EXPRESSING WRITTEN PERMISSION.

CPU1 VDD_18_S5&VDDIO_AUDIO

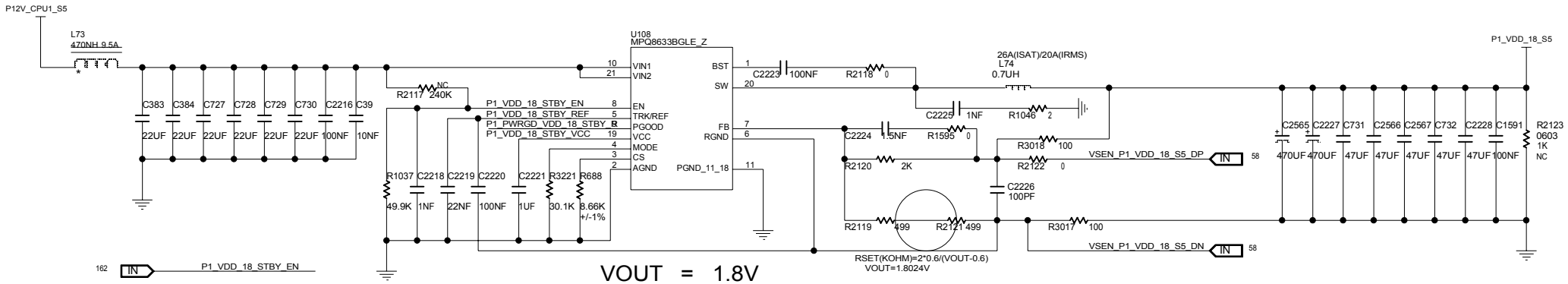

VOUT = 1.8V
IOUT TDC = 11A
OCP = 16.5A
FSW = 800KHZ
VFB = 0.6V
TSS = 2MS

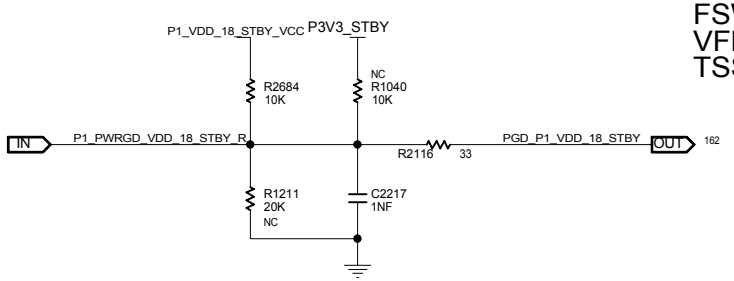

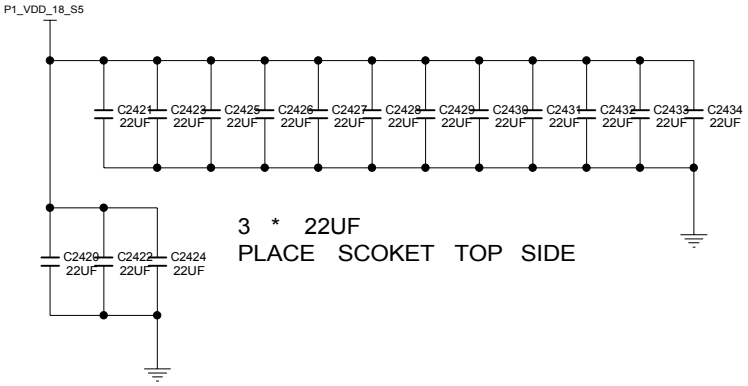

12 * 22UF
PLACE SCOKET BOTTOM SIDE

3 * 22UF
PLACE SCOKET TOP SIDE

MODULE=---
FUNCTION=---

CNIT TECHNOLOGIES CO.,LTD.				
BOARD NAME BM-H14DSP_VERA			DRAWINGNO CNIT0302K1D0DL	
DESIGNED	ZHUHUI 00746	DATE 2024/10/22	SHEET 205 OF 276	REV
REVIEWED	GUBIN 00260	DATE 2024/11/22	Thu Jan 02 20:52:22 2025	

THIS DOCUMENT AND THE TECHNICAL DATA DISCLOSED ARE PROPRIETARY TO CNIT TECHNOLOGIES CO., LTD. AND SHALL NOT BE DUPLICATED USED RELEASED OR DISCLOSED WITHOUT EXPRESSING WRITTEN PERMISSION.

MPQ8626

CPU0 VDDC_33_S5
VIN=12V :VOUT=3V3

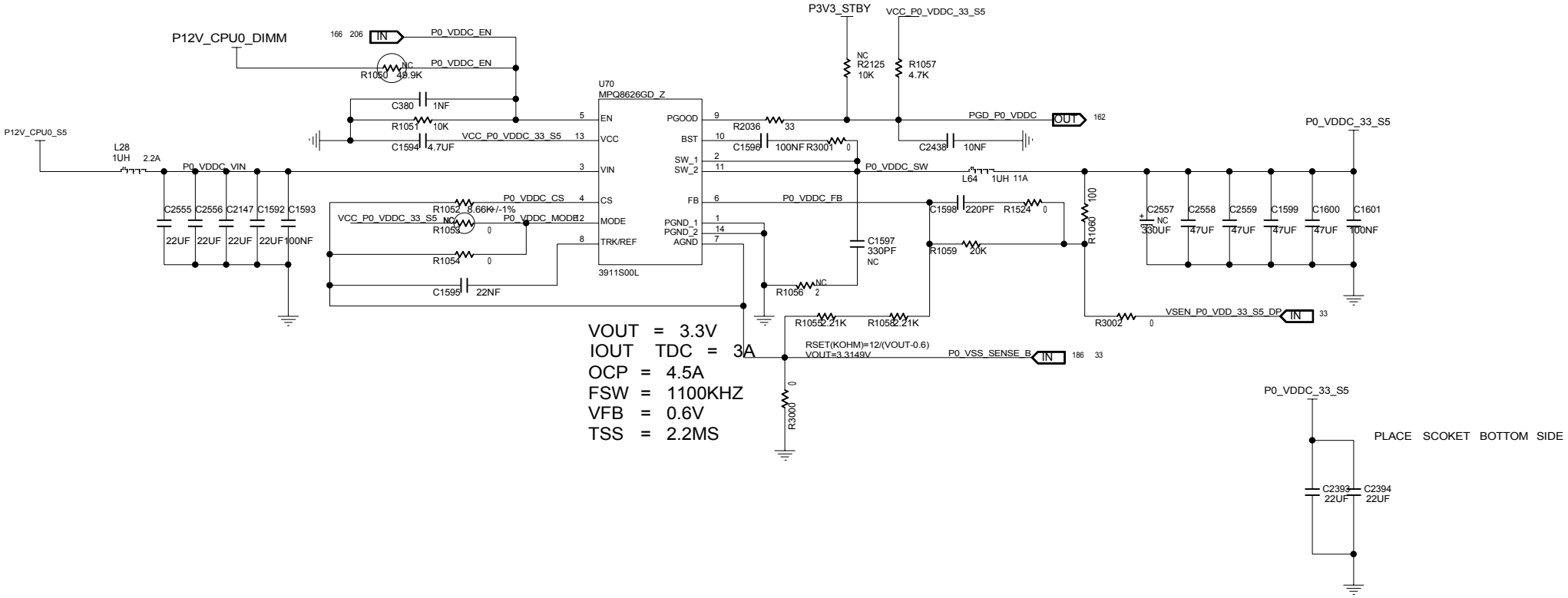

MODULE=---
FUNCTION=---

CNIT TECHNOLOGIES CO.,LTD.				
BOARD NAME BM-H14DSP_VERA			DRAWINGNO CNIT0302K1D0DL	
DESIGNED	ZHUHUI 00746	DATE 2024/10/22	SHEET 206 OF 276	REV
REVIEWED	GUBIN 00260	DATE 2024/11/22	Thu Jan 02 20:52:27 2025	

THIS DOCUMENT AND THE TECHNICAL DATA DISCLOSED ARE PROPRIETARY TO CNIT TECHNOLOGIES CO., LTD. AND SHALL NOT BE DUPLICATED USED RELEASED OR DISCLOSED WITHOUT EXPRESSING WRITTEN PERMISSION.

CPU1 VDDC_33_S5

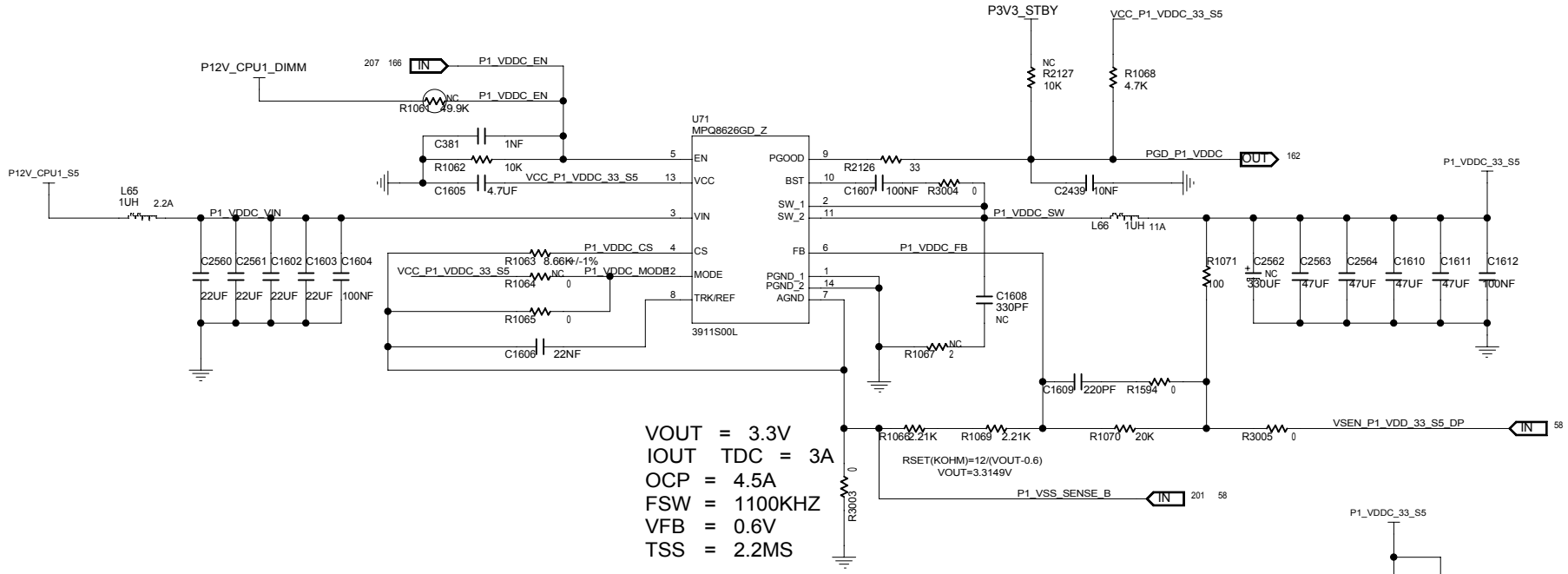

VOUT = 3.3V
IOUT TDC = 3A
OCP = 4.5A
FSW = 1100KHZ
VFB = 0.6V
TSS = 2.2MS

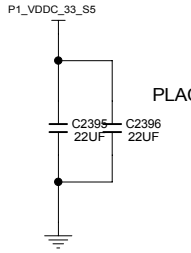

PLACE SCOKET BOTTOM SIDE

MODULE=---
FUNCTION=---

CNIT TECHNOLOGIES CO.,LTD.				
BOARD NAME BM-H14DSP_VERA			DRAWINGNO CNIT0302K1D0DL	
DESIGNED	ZHUHUI 00746	DATE 2024/10/22	SHEET 207 OF 276	REV
REVIEWED	GUBIN 00260	DATE 2024/11/22	Thu Jan 02 20:52:32 2025	

THIS DOCUMENT AND THE TECHNICAL DATA DISCLOSED ARE PROPRIETARY TO CNIT TECHNOLOGIES CO., LTD. AND SHALL NOT BE DUPLICATED USED RELEASED OR DISCLOSED WITHOUT EXPRESSING WRITTEN PERMISSION.

MPQ8633

VIN=12V VOUT=3V3

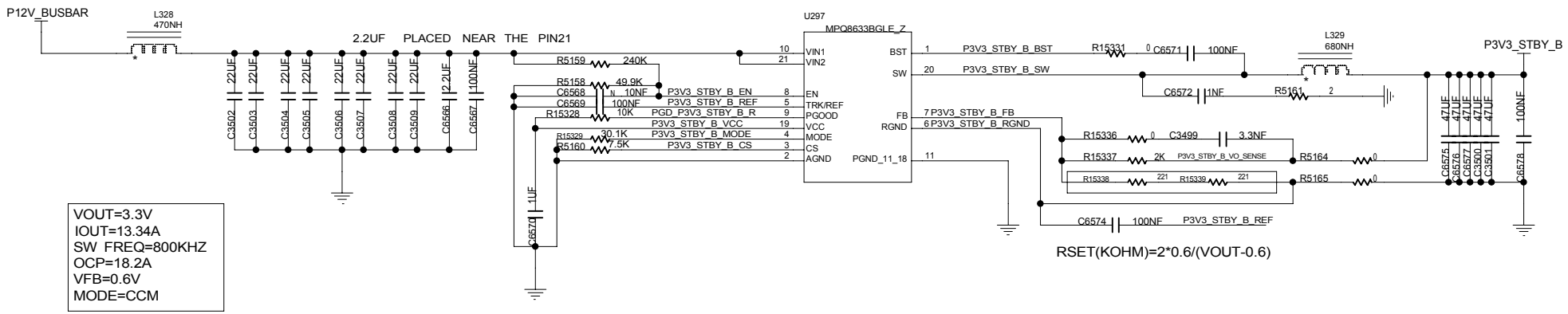

VOUT=3.3V
IOUT=13.34A
SW FREQ=800KHZ
OCP=18.2A
VFB=0.6V
MODE=CCM

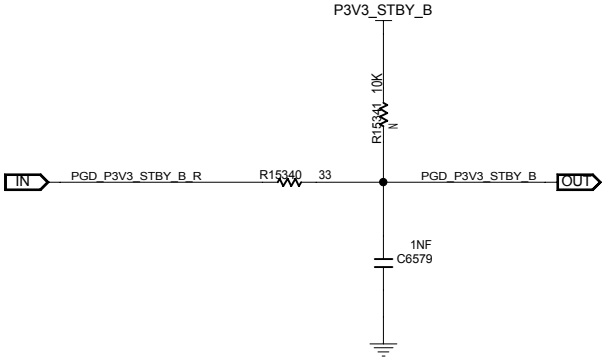

MODULE=---
FUNCTION=---

CNIT TECHNOLOGIES CO.,LTD.				
BOARD NAME BM-H14DSP_VERA			DRAWINGNO CNIT0302K1D0DL	
DESIGNED	ZHUHUI 00746	DATE 2024/10/22	SHEET 208 OF 276	REV
REVIEWED	GUBIN 00260	DATE 2024/11/22	Thu Jan 02 20:52:36 2025	

THIS DOCUMENT AND THE TECHNICAL DATA DISCLOSED ARE PROPRIETARY TO CNIT TECHNOLOGIES CO., LTD. AND SHALL NOT BE DUPLICATED USED RELEASED OR DISCLOSED WITHOUT EXPRESSING WRITTEN PERMISSION.

MPQ8633A

VIN=12V VOUT=5V0
P5V_STBY

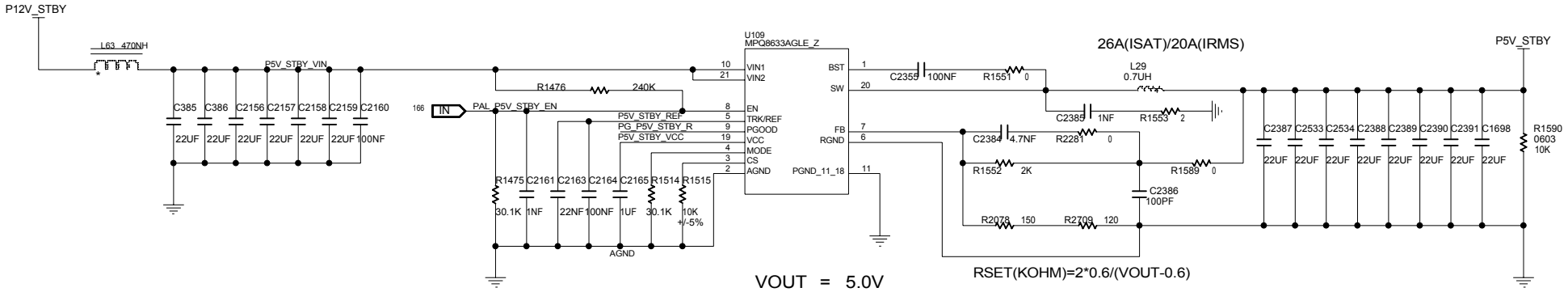

VOUT = 5.0V
IOUT TDC = 5.7A
OCP = 8.6A
FSW = 800KHZ
VFB = 0.6V
TSS = 2MS

EVT CHANGE BY W00209, ADD R1212 TO COMPLIANT WITH JWH5087

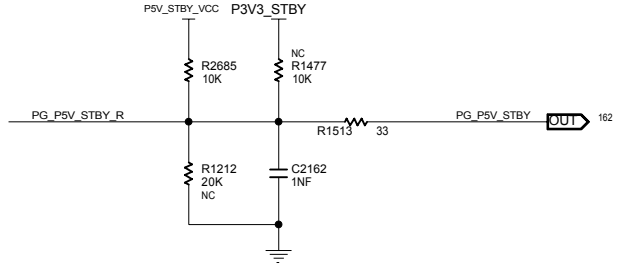

CAD NOTICE: PVCC_HPMOS CURRENT = 3.3A
C-TIME = 1.86MS

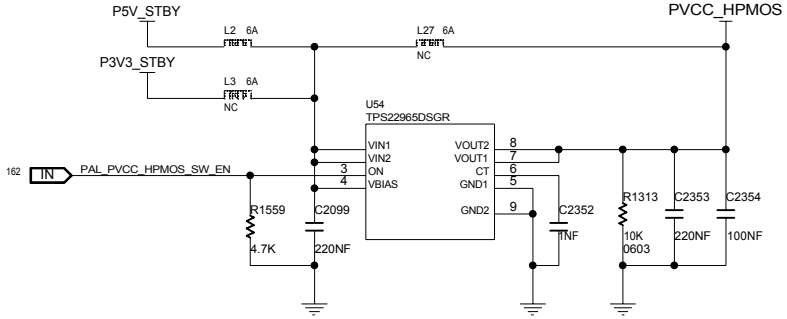

EVT VC CHANGE BY W00209,ADD EFUSE TO CONTROLL PVCC_HPMOS TIMING

MODULE=---
FUNCTION=---

CNIT TECHNOLOGIES CO.,LTD.				
BOARD NAME BM-H14DSP_VERA			DRAWINGNO CNIT0302K1D0DL	
DESIGNED	ZHUHUI 00746	DATE 2024/10/22	SHEET 209 OF 276	REV
REVIEWED	GUBIN 00260	DATE 2024/11/22	Thu Jan 02 20:52:41 2025	

THIS DOCUMENT AND THE TECHNICAL DATA DISCLOSED ARE PROPRIETARY TO CNIT TECHNOLOGIES CO., LTD. AND SHALL NOT BE DUPLICATED USED RELEASED OR DISCLOSED WITHOUT EXPRESSING WRITTEN PERMISSION.

MPQ8633B

VIN=10V TO 14V VOUT=3V3

P3V3_STBY

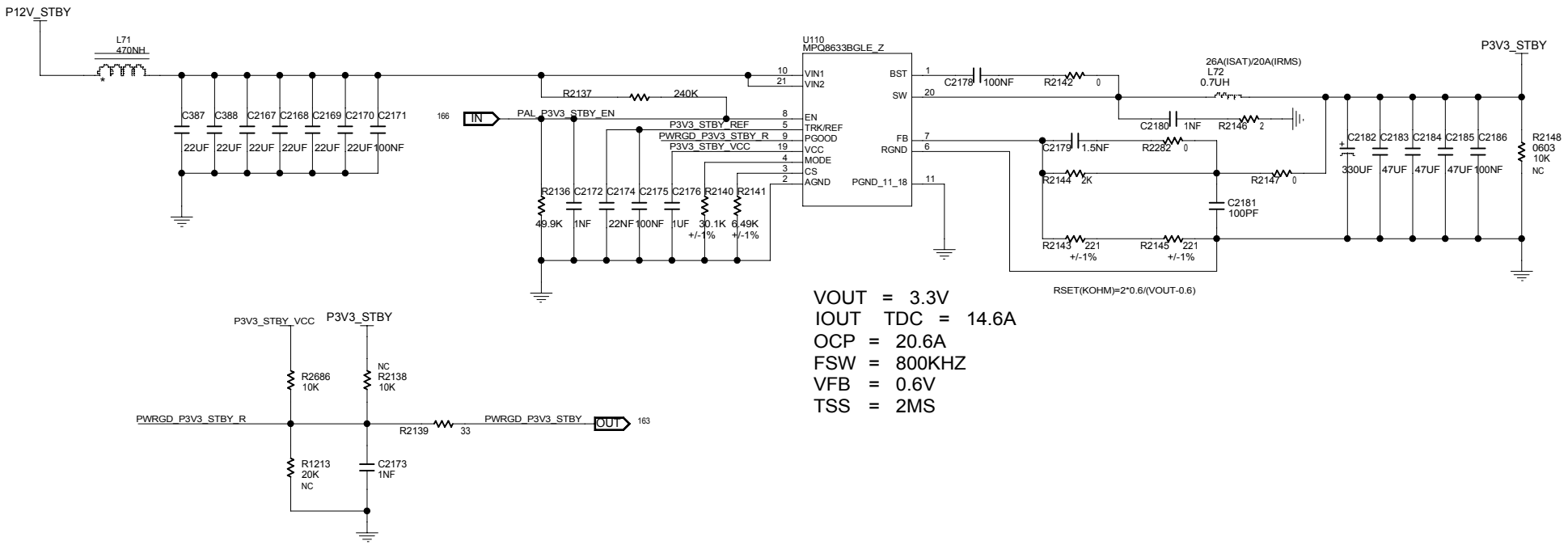

VOUT = 3.3V
IOUT TDC = 14.6A
OCP = 20.6A
FSW = 800KHZ
VFB = 0.6V
TSS = 2MS

MODULE=---
FUNCTION=---

CNIT TECHNOLOGIES CO.,LTD.				
BOARD NAME BM-H14DSP_VERA			DRAWINGNO CNIT0302K1D0DL	
DESIGNED	ZHUHUI 00746	DATE 2024/10/22	SHEET 210 OF 276	REV
REVIEWED	GUBIN 00260	DATE 2024/11/22	Thu Jan 02 20:52:46 2025	

THIS DOCUMENT AND THE TECHNICAL DATA DISCLOSED ARE PROPRIETARY TO CNIT TECHNOLOGIES CO., LTD. AND SHALL NOT BE DUPLICATED USED RELEASED OR DISCLOSED WITHOUT EXPRESSING WRITTEN PERMISSION.

TPS7A8300

P1V8_STBY

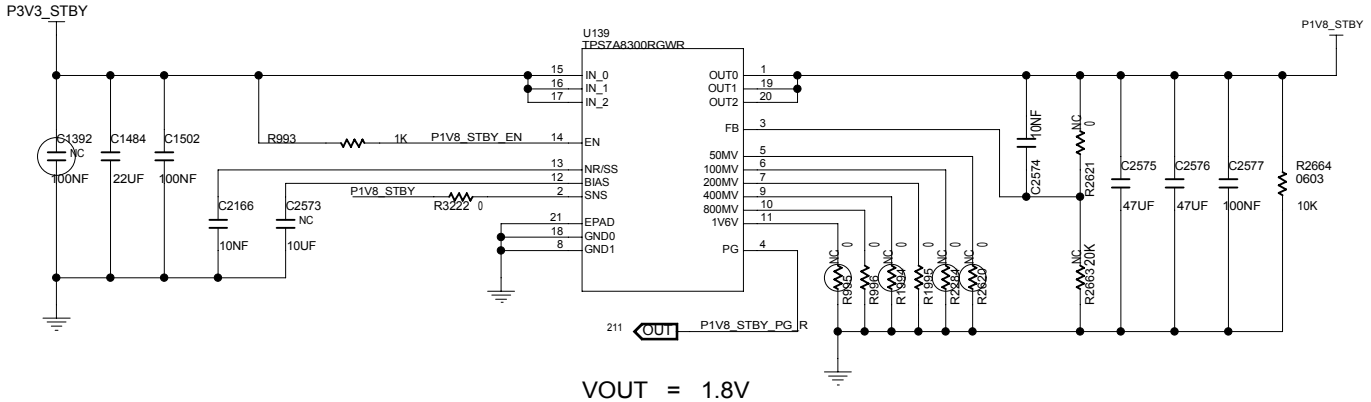

VOUT = 1.8V
IOUT MAX = 2A
VREF = 0.8V
TSS = 1.3MS

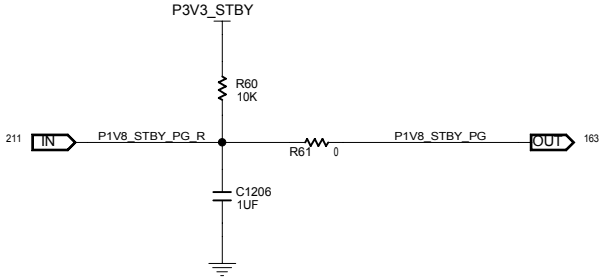

$V_{OUT} = V_{REF} + (\Sigma \text{ ANY-OUT Pins to Ground})$ (1)

Table 1. ANY-OUT Programmable Output Voltage

ANY-OUT PROGRAM PIN$ (Active Low)	ADDITIVE OUTPUT VOLTAGE LEVEL
Pin 5 (50mV)	50 mV
Pin 6 (100mV)	100 mV
Pin 7 (200mV)	200 mV
Pin 9 (400mV)	400 mV
Pin 10 (800mV)	800 mV
Pin 11 (1.6V)	1.6 V

MODULE=---
FUNCTION=---

CNIT TECHNOLOGIES CO.,LTD.				
BOARD NAME BM-H14DSP_VERA			DRAWINGNO CNIT0302K1D0DL	
DESIGNED	ZHUHUI 00746	DATE 2024/10/22	SHEET 211 OF 276	REV
REVIEWED	GUBIN 00260	DATE 2024/11/22	Fri Jan 03 11:35:28 2025	

THIS DOCUMENT AND THE TECHNICAL DATA DISCLOSED ARE PROPRIETARY TO CNIT TECHNOLOGIES CO., LTD. AND SHALL NOT BE DUPLICATED USED RELEASED OR DISCLOSED WITHOUT EXPRESSING WRITTEN PERMISSION.

ADM1278+PSMN1R3_30YL

FILL UNDER THE TAB OF THE FET:
SINGLE FET MINIMUM OF 0.4IN^2PER FET
MULTIPLE FET MINIMUM OF 0.28IN^2PER FET
Q1-QN SHALL BE THE SAME MPN

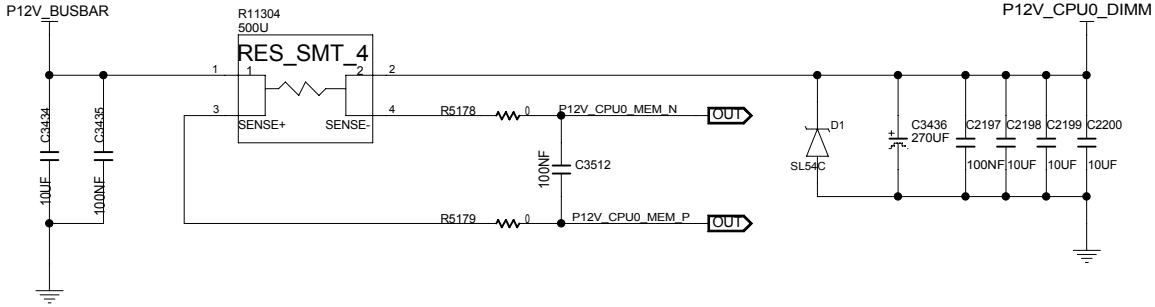

MODULE=---
FUNCTION=---

CNIT TECHNOLOGIES CO.,LTD.				
BOARD NAME BM-H14DSP_VERA			DRAWINGNO CNIT0302K1D0DL	
DESIGNED	ZHUHUI 00746	DATE 2024/10/22	SHEET 212 OF 276	REV
REVIEWED	GUBIN 00260	DATE 2024/11/22	Thu Jan 02 20:52:56 2025	

THIS DOCUMENT AND THE TECHNICAL DATA DISCLOSED ARE PROPRIETARY TO CNIT TECHNOLOGIES CO., LTD. AND SHALL NOT BE DUPLICATED USED RELEASED OR DISCLOSED WITHOUT EXPRESSING WRITTEN PERMISSION.

MODULE=---
FUNCTION=---

CNIT TECHNOLOGIES CO.,LTD.				
BOARD NAME BM-H14DSP_VERA			DRAWINGNO CNIT0302K1D0DL	
DESIGNED	ZHUHUI 00746	DATE 2024/10/22	SHEET 213 OF 276	REV
REVIEWED	GUBIN 00260	DATE 2024/11/22	Thu Nov 07 20:57:40 2024	

THIS DOCUMENT AND THE TECHNICAL DATA DISCLOSED ARE PROPRIETARY TO CNIT TECHNOLOGIES CO., LTD. AND SHALL NOT BE DUPLICATED USED RELEASED OR DISCLOSED WITHOUT EXPRESSING WRITTEN PERMISSION.

MODULE=---
FUNCTION=---

CNIT TECHNOLOGIES CO.,LTD.				
BOARD NAME BM-H14DSP_VERA			DRAWINGNO CNIT0302K1D0DL	
DESIGNED	ZHUHUI 00746	DATE 2024/10/22	SHEET 214 OF 276	REV
REVIEWED	GUBIN 00260	DATE 2024/11/22	Thu Nov 07 21:03:35 2024	

THIS DOCUMENT AND THE TECHNICAL DATA DISCLOSED ARE PROPRIETARY TO CNIT TECHNOLOGIES CO., LTD. AND SHALL NOT BE DUPLICATED USED RELEASED OR DISCLOSED WITHOUT EXPRESSING WRITTEN PERMISSION.

ADM1278+PSMN1R3_30YL

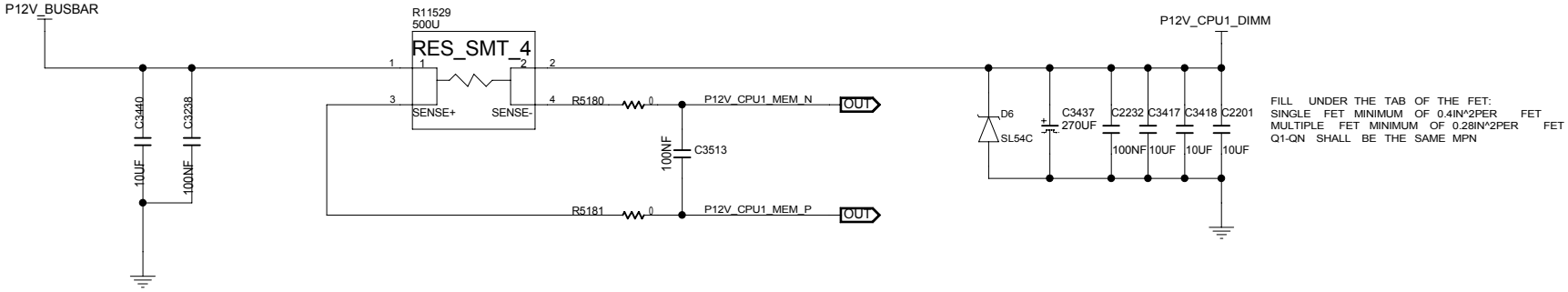

MODULE=---

FUNCTION=---

CNIT TECHNOLOGIES CO.,LTD.				
BOARD NAME BM-H14DSP_VERA			DRAWINGNO CNIT0302K1D0DL	
DESIGNED	ZHUHUI 00746	DATE 2024/10/22	SHEET 215 OF 276	REV
REVIEWED	GUBIN 00260	DATE 2024/11/22	Thu Jan 02 20:53:06 2025	

THIS DOCUMENT AND THE TECHNICAL DATA DISCLOSED ARE PROPRIETARY TO CNIT TECHNOLOGIES CO., LTD. AND SHALL NOT BE DUPLICATED USED RELEASED OR DISCLOSED WITHOUT EXPRESSING WRITTEN PERMISSION.

MODULE=---
FUNCTION=---

CNIT TECHNOLOGIES CO.,LTD.				
BOARD NAME BM-H14DSP_VERA			DRAWINGNO CNIT0302K1D0DL	
DESIGNED	ZHUHUI 00746	DATE 2024/10/22	SHEET 216 OF 276	REV
REVIEWED	GUBIN 00260	DATE 2024/11/22	Thu Nov 07 21:33:58 2024	

THIS DOCUMENT AND THE TECHNICAL DATA DISCLOSED ARE PROPRIETARY TO CNIT TECHNOLOGIES CO., LTD. AND SHALL NOT BE DUPLICATED USED RELEASED OR DISCLOSED WITHOUT EXPRESSING WRITTEN PERMISSION.

MODULE=---
FUNCTION=---

CNIT TECHNOLOGIES CO.,LTD.				
BOARD NAME BM-H14DSP_VERA			DRAWINGNO CNIT0302K1D0DL	
DESIGNED	ZHUHUI 00746	DATE 2024/10/22	SHEET 217 OF 276	REV
REVIEWED	GUBIN 00260	DATE 2024/11/22	Thu Nov 07 21:34:53 2024	

THIS DOCUMENT AND THE TECHNICAL DATA DISCLOSED ARE PROPRIETARY TO CNIT TECHNOLOGIES CO., LTD. AND SHALL NOT BE DUPLICATED USED RELEASED OR DISCLOSED WITHOUT EXPRESSING WRITTEN PERMISSION.

MODULE=---
FUNCTION=---

CNIT TECHNOLOGIES CO.,LTD.				
BOARD NAME BM-H14DSP_VERA			DRAWINGNO CNIT0302K1D0DL	
DESIGNED	ZHUHUI 00746	DATE 2024/10/22	SHEET 218 OF 276	REV
REVIEWED	GUBIN 00260	DATE 2024/11/22	Wed Oct 23 10:51:32 2024	

THIS DOCUMENT AND THE TECHNICAL DATA DISCLOSED ARE PROPRIETARY TO CNIT TECHNOLOGIES CO., LTD. AND SHALL NOT BE DUPLICATED USED RELEASED OR DISCLOSED WITHOUT EXPRESSING WRITTEN PERMISSION.

MODULE=---
FUNCTION=---

CNIT TECHNOLOGIES CO.,LTD.				
BOARD NAME BM-H14DSP_VERA			DRAWINGNO CNIT0302K1D0DL	
DESIGNED	ZHUHUI 00746	DATE 2024/10/22	SHEET 219 OF 276	REV
REVIEWED	GUBIN 00260	DATE 2024/11/22	Tue Oct 22 21:57:48 2024	

THIS DOCUMENT AND THE TECHNICAL DATA DISCLOSED ARE PROPRIETARY TO CNIT TECHNOLOGIES CO., LTD. AND SHALL NOT BE DUPLICATED USED RELEASED OR DISCLOSED WITHOUT EXPRESSING WRITTEN PERMISSION.

MODULE=---
FUNCTION=---

CNIT TECHNOLOGIES CO.,LTD.				
BOARD NAME BM-H14DSP_VERA			DRAWINGNO CNIT0302K1D0DL	
DESIGNED	ZHUHUI 00746	DATE 2024/10/22	SHEET 220 OF 276	REV
REVIEWED	GUBIN 00260	DATE 2024/11/22	Wed Oct 23 10:04:12 2024	

THIS DOCUMENT AND THE TECHNICAL DATA DISCLOSED ARE PROPRIETARY TO CNIT TECHNOLOGIES CO., LTD. AND SHALL NOT BE DUPLICATED USED RELEASED OR DISCLOSED WITHOUT EXPRESSING WRITTEN PERMISSION.

MECHANICAL

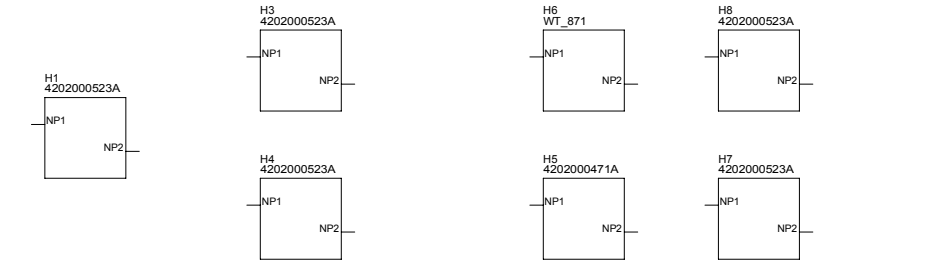

VR HEATSINK CPU0 VR HEATSINK CPU1

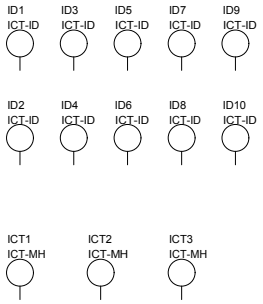

SCOKET BP

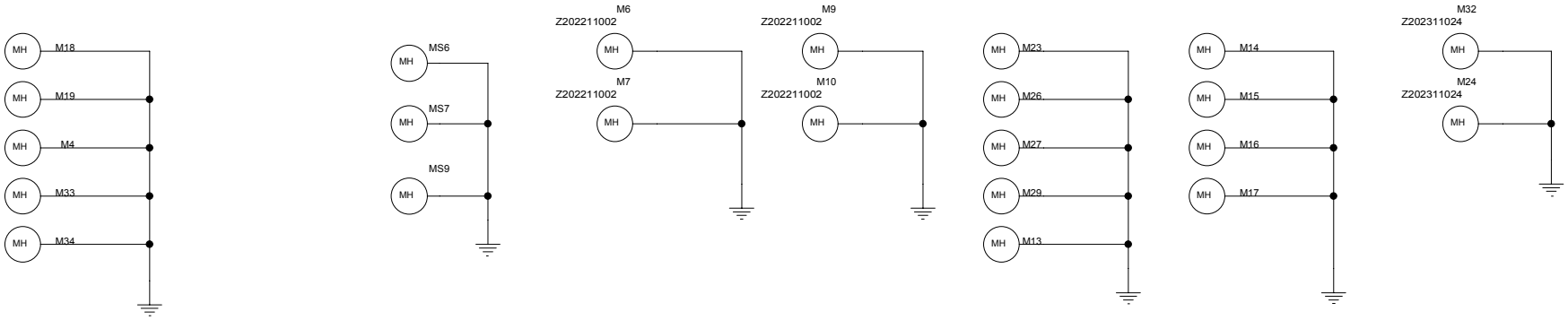

MODULE=---

FUNCTION=---

CNIT TECHNOLOGIES CO.,LTD.				
BOARD NAME BM-H14DSP_VERA			DRAWINGNO CNIT0302K1D0DL	
DESIGNED	ZHUHUI 00746	DATE 2024/10/22	SHEET 221 OF 276	REV
REVIEWED	GUBIN 00260	DATE 2024/11/22	Mon May 12 15:23:24 2025	

THIS DOCUMENT AND THE TECHNICAL DATA DISCLOSED ARE PROPRIETARY TO CNIT TECHNOLOGIES CO., LTD. AND SHALL NOT BE DUPLICATED USED RELEASED OR DISCLOSED WITHOUT EXPRESSING WRITTEN PERMISSION.

EVT CHANGE LIST:

1	2021/09/10	PAGE1-216	VA DRAFT COMPLETED
2	2021/09/29	PAGE1-216	VA SCH PUBLISHED
3	2021/11/20	PAGE1-216	VA CHANGE TO VB, SOLVING STRUCTURAL ISSUE
4	2021/11/20	PAGE154	RDC:3649382 CHANGE Q40 OD PULL UP TO P3V3_STBY
5	2021/11/23	PAGE140	DELETE J26
6	2021/12/15	PAGE162	RDC:3658336 ADD P0_SPI_CLK_STRAP TO CPLD
7	2021/12/15	PAGE215	CHANGE M2/M6 APERTURE TO 4.5MM
8	2021/12/15	PAGE93	DELETE PAL_USB_VBUS2_EN/PAL_USB_VBUS1_EN/P0_USB_OC0_N/P0_USB_OC1_N
9	2021/12/15	PAGE169	DELETE U101 EMC1413
10	2021/12/15	PAGE162	DELETE P1_RTC_CLK_STRAP_R
11	2021/12/20	PAGE198-203	RDC:3666829 ADD R1115 20K PULL DOWN TO P0_PWRGD_VDD_18_STBY_R; ADD R1213 20K PULL DOWN TO PG_P5V_STBY_R ADD R1212 20K PULL DOWN TO PWRGD_P3V3_STBY_R; ADD R1211 20K PULL DOWN TO P1_PWRGD_VDD_18_STBY_R;
12	2021/12/20	PAGE91	RDC:3658336 CHANGE U37/U38 FROM LSF0204D TO SN74AVC4T245PWR;ADD C2098 CLOSE TO U37
13	2021/12/20	PAGE149	DELETE R1779/R1781/R1791/R1793/R1767/R1769/R1783/R1785/R3169/R3170/R3171
14	2021/12/20	PAGE203	RDC:3653875 ADD PVCC_HPMOS SWITCH CIRCUIT
15	2021/12/20	PAGE206-213	RDC:3672391 ADD Q31/Q32/Q33/Q34 AS DISCHARGE CIRCUIT
16	2021/12/21	PAGE119	RDC:3670026 CHANGE S1 FROM 16070018 TO 1607A000
17	2021/12/24	PAGE162	RDC:3672445 DELETE NET CPLD_TEST_6/CPLD_RESET_N/CPLD_TEST_1,VR RST_L CHANGE TO CPLD 3.3V BANK
18	2021/12/30	PAGE152	CHANGE J9/J11 SCH&PCB SYMBOL
19	2022/01/03	PAGE212-213	RDC:3672391 ADD R1293/R1294 TO DISCHARGE CIRCUIT
20	2022/03/20	PAGE159	RDC:3759413 ADD IPMB J26 CIRCUIT

MODULE=---
FUNCTION=---

CNIT TECHNOLOGIES CO.,LTD.				
BOARD NAME BM-H14DSP_VERA			DRAWINGNO CNIT0302K1D0DL	
DESIGNED	ZHUHUI 00746	DATE 2024/10/22	SHEET 222 OF 276	REV
REVIEWED	GUBIN 00260	DATE 2024/11/22	Thu Oct 17 16:49:49 2024	

THIS DOCUMENT AND THE TECHNICAL DATA DISCLOSED ARE PROPRIETARY TO CNIT TECHNOLOGIES CO., LTD. AND SHALL NOT BE DUPLICATED USED RELEASED OR DISCLOSED WITHOUT EXPRESSING WRITTEN PERMISSION.

EVT CHANGE LIST:

21	2022/03/29	PAGE129-133	RDC:3718182 EXCHANGE J33/J32 SILKTOP,EXCHANGE J8/J22 SILKTOP
22	2022/03/29	PAGE172-201	VR CONTROLLOR ADD PVCC_HPMOS MONITOR CIRCUIT
23	2022/03/30	PAGE103	CHANGE APML&SEC TOPOLOGY WITH U129/U130 CIRCUIT
24	2022/03/31	PAGE209	DELETE Q26/Q28, ADD U54 EFUSE
25	2022/04/18	PAGE208	DELETE U125/U128, ADD U85/U93 JW7222 EFUSE AS ADM1278'S SUBSTITUTE
26	2022/05/17	PAGE58	P0 XTRIG<7:4> CONNECT WITH P1 XTRIG<7:4> DIRECTLY
27	2022/05/17	PAGE171	DELETE INA3221, ADD R1358/R1360 TO CONNECTING P12V_CPUX_DIMM WITH P12V_CPUX_S5
28	2022/05/17	PAGE168	CHANGE U55 FROM 38010042 TO 3801K003
29	2022/05/21	PAGE208	CHANGE P0_BIOS_ID7 FROM CPU0 PIN AGPIO104 TO AGPIO106

MODULE=---
FUNCTION=---

CNIT TECHNOLOGIES CO.,LTD.

BOARD NAME	BM-H14DSP_VERA		DRAWINGNO	CNIT0302K1D0DL
DESIGNED	ZHUHUI 00746	DATE 2024/10/22	SHEET 223 OF 276	REV
REVIEWED	GUBIN 00260	DATE 2024/11/22	Thu Oct 17 16:49:50 2024	

THIS DOCUMENT AND THE TECHNICAL DATA DISCLOSED ARE PROPRIETARY TO CNIT TECHNOLOGIES CO., LTD. AND SHALL NOT BE DUPLICATED USED RELEASED OR DISCLOSED WITHOUT EXPRESSING WRITTEN PERMISSION.

P12V_STBY

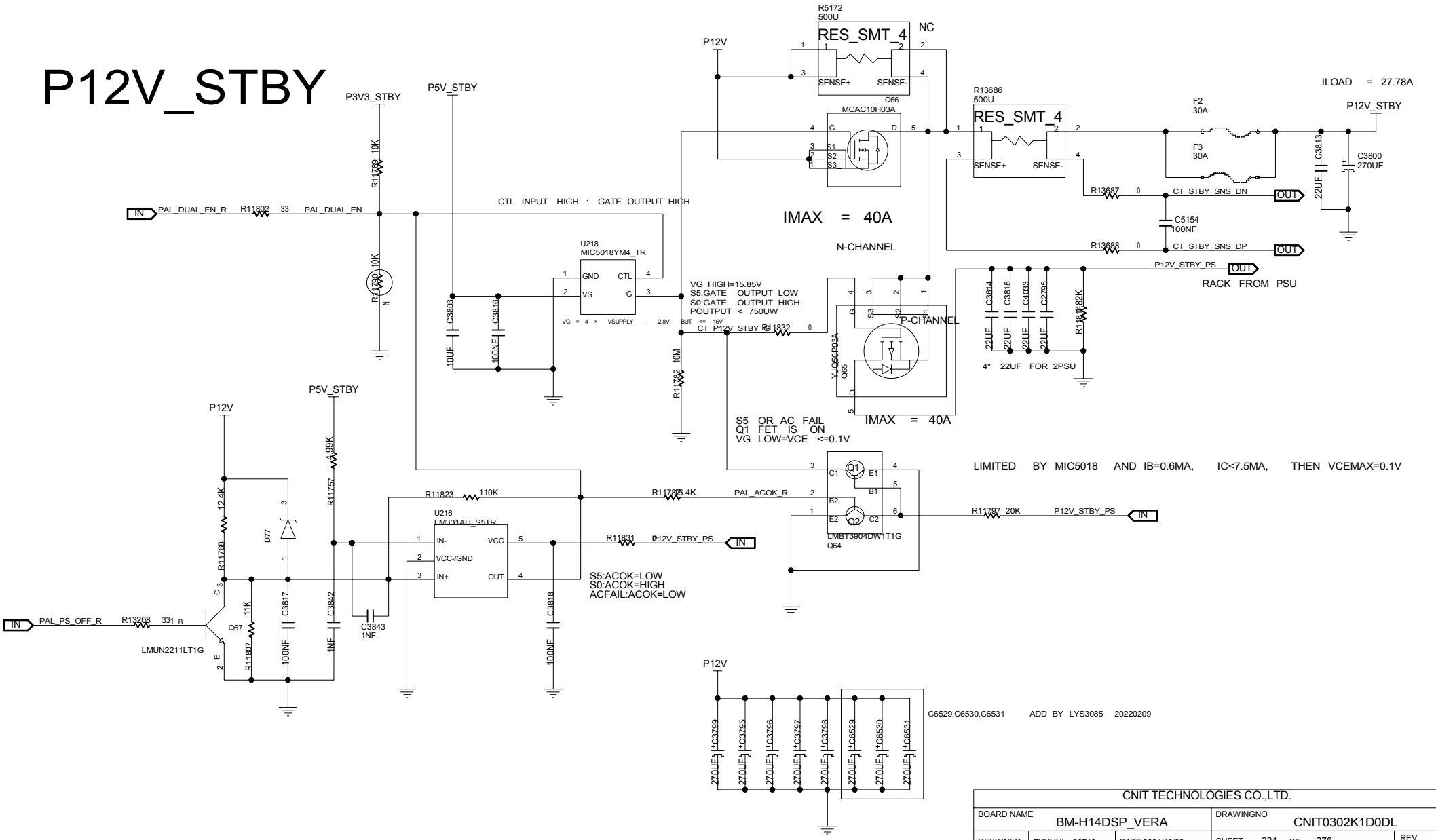

MODULE=---

FUNCTION=---

CNIT TECHNOLOGIES CO.,LTD.				
BOARD NAME BM-H14DSP_VERA			DRAWINGNO CNIT0302K1D0DL	
DESIGNED	ZHUHUI 00746	DATE 2024/10/22	SHEET 224 OF 276	REV
REVIEWED	GUBIN 00260	DATE 2024/11/22	Thu Jan 02 21:05:57 2025	

THIS DOCUMENT AND THE TECHNICAL DATA DISCLOSED ARE PROPRIETARY TO CNIT TECHNOLOGIES CO., LTD. AND SHALL NOT BE DUPLICATED USED RELEASED OR DISCLOSED WITHOUT EXPRESSING WRITTEN PERMISSION.

P12V_STBY_DROOP
P12V_DROOP

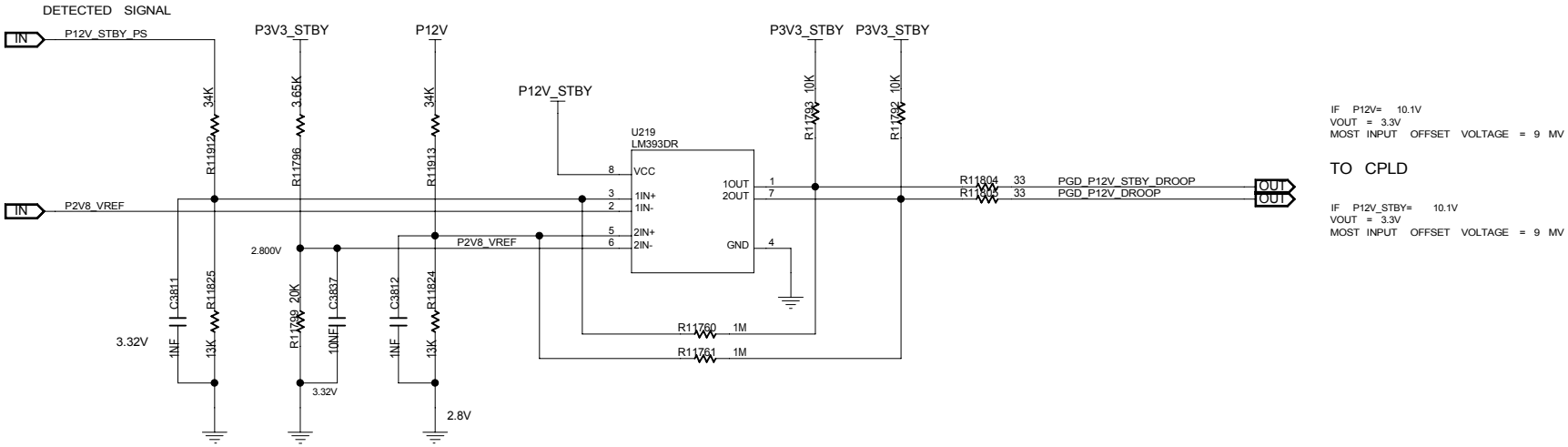

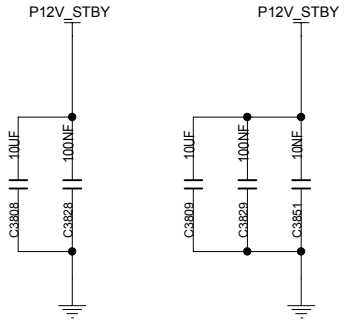

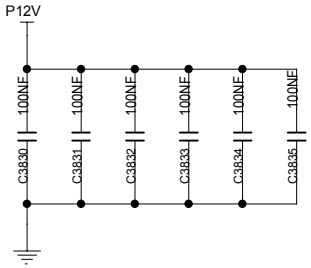

MODULE=---
FUNCTION=---

CNIT TECHNOLOGIES CO.,LTD.				
BOARD NAME BM-H14DSP_VERA			DRAWINGNO CNIT0302K1D0DL	
DESIGNED	ZHUHUI 00746	DATE 2024/10/22	SHEET 225 OF 276	REV
REVIEWED	GUBIN 00260	DATE 2024/11/22	Thu Jan 02 21:06:02 2025	

THIS DOCUMENT AND THE TECHNICAL DATA DISCLOSED ARE PROPRIETARY TO CNIT TECHNOLOGIES CO., LTD. AND SHALL NOT BE DUPLICATED USED RELEASED OR DISCLOSED WITHOUT EXPRESSING WRITTEN PERMISSION.

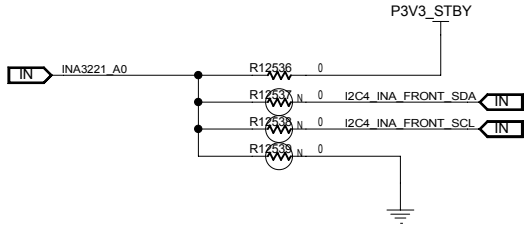

NOTE: ADDRESS 0X82

A0	SLAVE ADDRESS	
GND	1000000	
VS+	1000001	Y
SDA	1000010	
SCL	1000011	

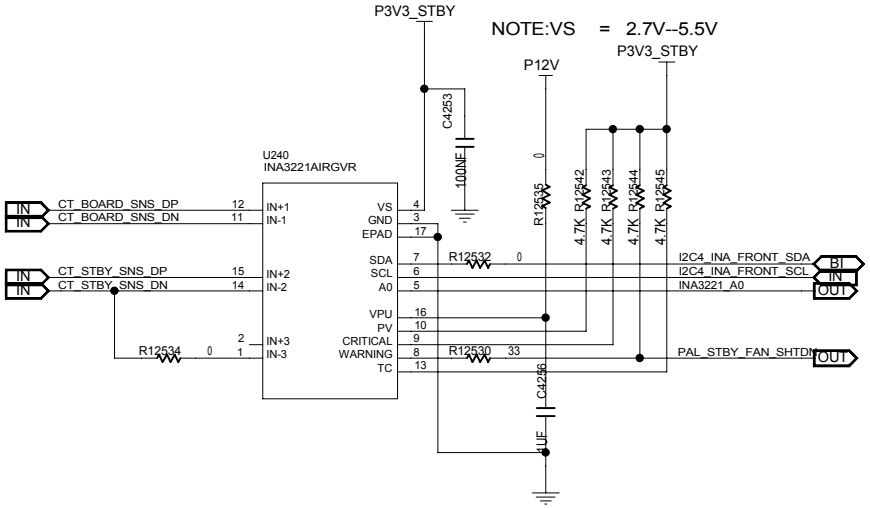

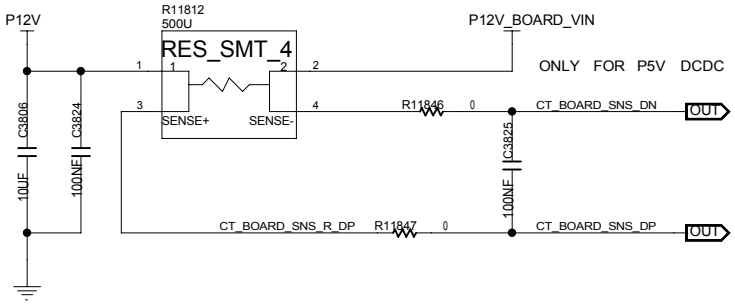

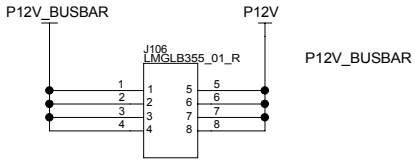

MODULE=---

FUNCTION=---

CNIT TECHNOLOGIES CO.,LTD.				
BOARD NAME BM-H14DSP_VERA			DRAWINGNO CNIT0302K1D0DL	
DESIGNED	ZHUHUI 00746	DATE 2024/10/22	SHEET 226 OF 276	REV
REVIEWED	GUBIN 00260	DATE 2024/11/22	Thu Jan 02 21:06:07 2025	

THIS DOCUMENT AND THE TECHNICAL DATA DISCLOSED ARE PROPRIETARY TO CNIT TECHNOLOGIES CO., LTD. AND SHALL NOT BE DUPLICATED USED RELEASED OR DISCLOSED WITHOUT EXPRESSING WRITTEN PERMISSION.

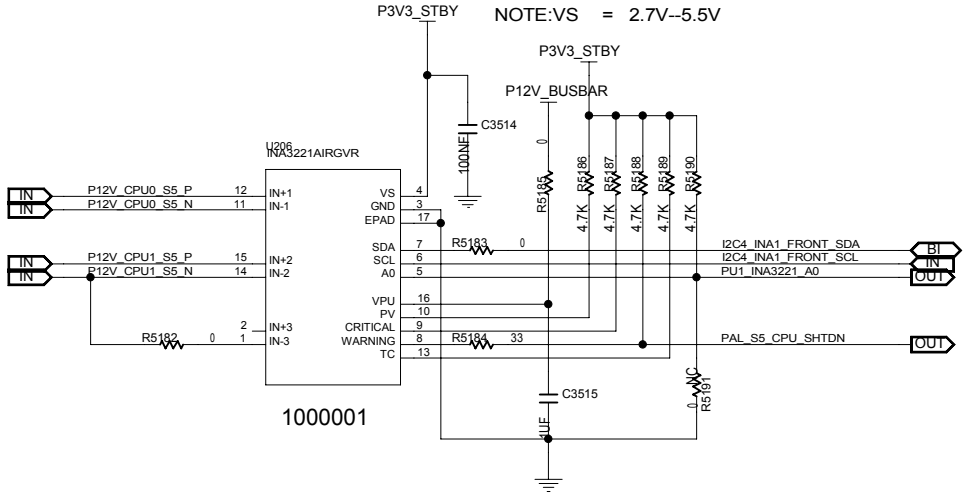

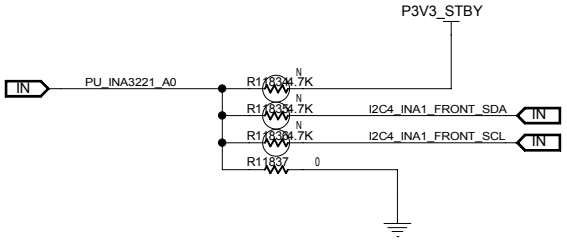

NOTE: ADDRESS 0X80

A0	SLAVE ADDRESS	
GND	1000000	Y
VS+	1000001	
SDA	1000010	
SCL	1000011	

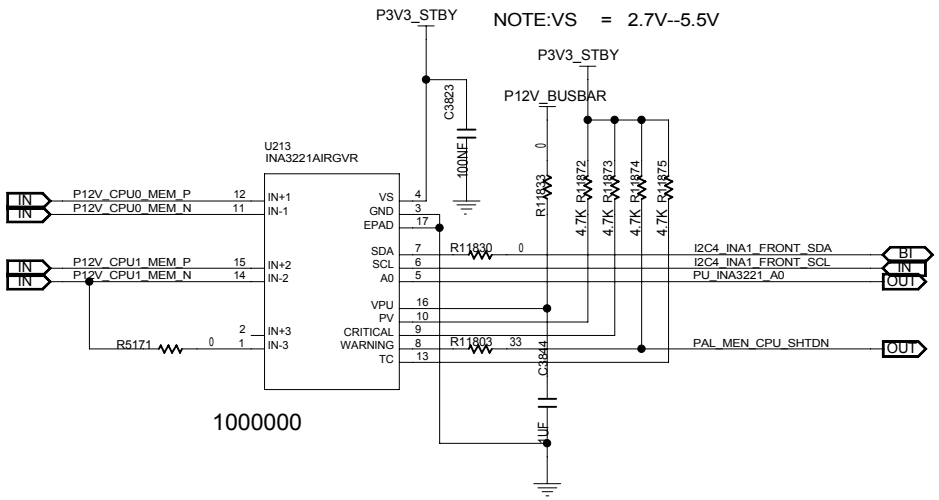

MODULE=---

FUNCTION=---

CNIT TECHNOLOGIES CO.,LTD.				
BOARD NAME BM-H14DSP_VERA			DRAWINGNO CNIT0302K1D0DL	
DESIGNED	ZHUHUI 00746	DATE 2024/10/22	SHEET 227 OF 276	REV
REVIEWED	GUBIN 00260	DATE 2024/11/22	Tue Jan 07 10:22:50 2025	

THIS DOCUMENT AND THE TECHNICAL DATA DISCLOSED ARE PROPRIETARY TO CNIT TECHNOLOGIES CO., LTD. AND SHALL NOT BE DUPLICATED USED RELEASED OR DISCLOSED WITHOUT EXPRESSING WRITTEN PERMISSION.

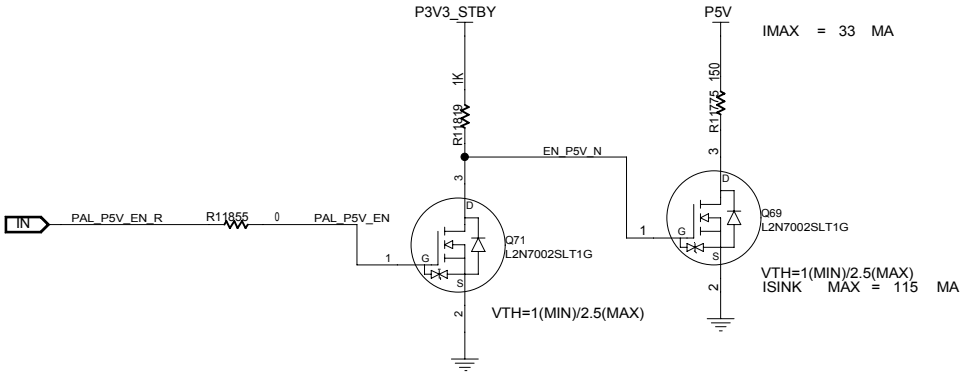

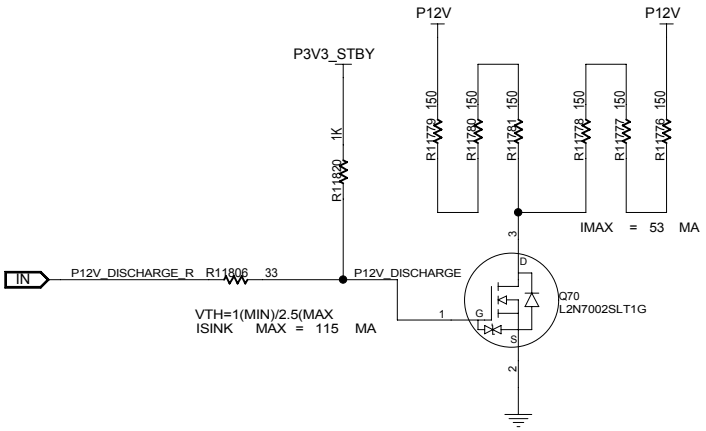

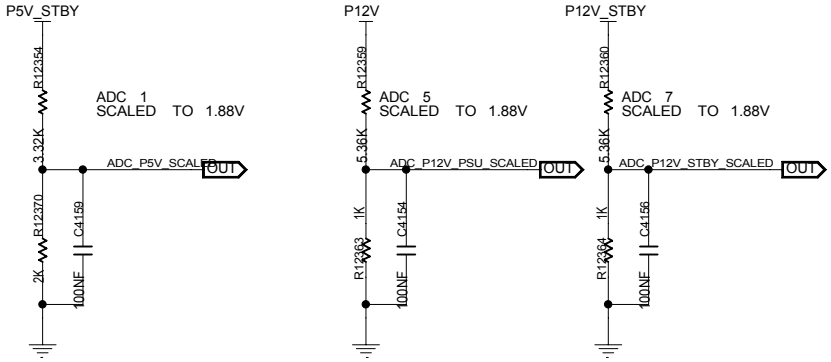

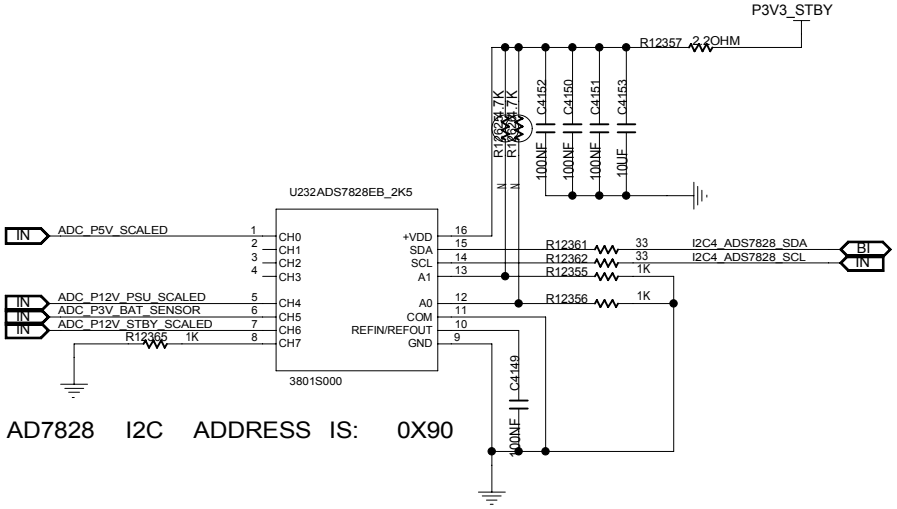

AD7828 I2C ADDRESS IS: 0X90

MODULE=---

FUNCTION=---

CNIT TECHNOLOGIES CO.,LTD.				
BOARD NAME BM-H14DSP_VERA			DRAWINGNO CNIT0302K1D0DL	
DESIGNED	ZHUHUI 00746	DATE 2024/10/22	SHEET 228 OF 276	REV
REVIEWED	GUBIN 00260	DATE 2024/11/22	Thu Jan 02 21:06:16 2025	

THIS DOCUMENT AND THE TECHNICAL DATA DISCLOSED ARE PROPRIETARY TO CNIT TECHNOLOGIES CO., LTD. AND SHALL NOT BE DUPLICATED USED RELEASED OR DISCLOSED WITHOUT EXPRESSING WRITTEN PERMISSION.

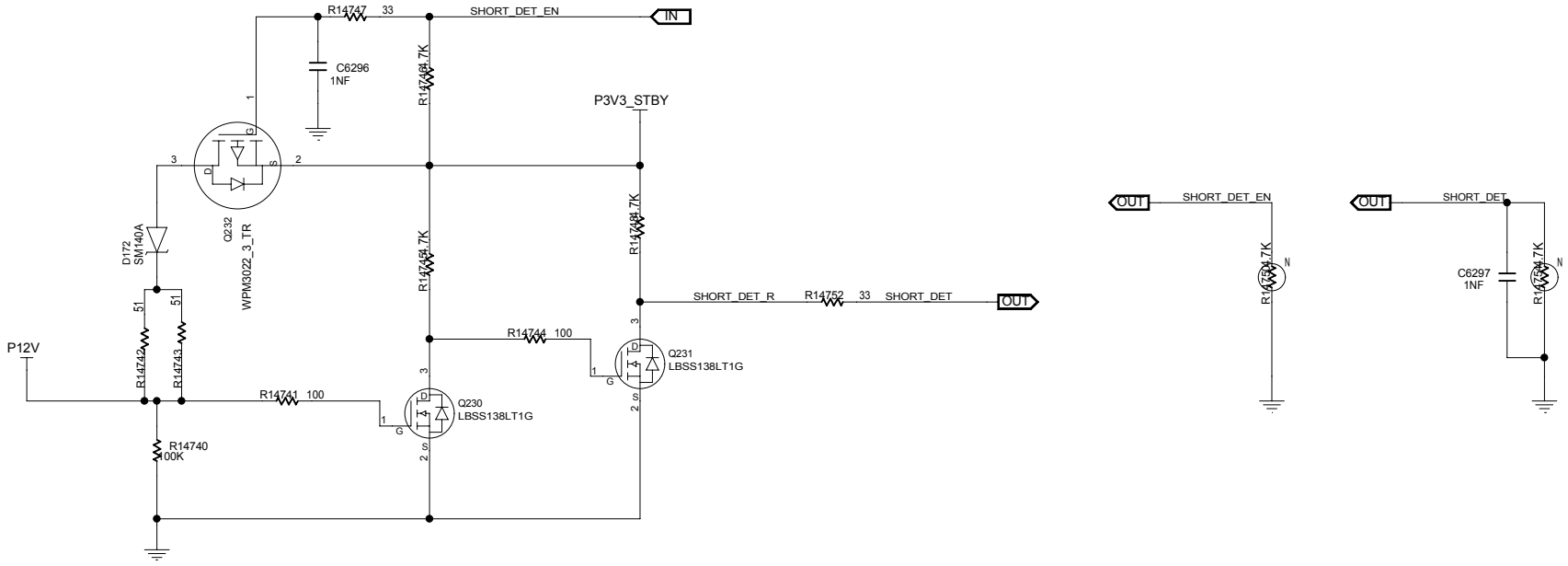

MODULE=---

FUNCTION=---

CNIT TECHNOLOGIES CO.,LTD.				
BOARD NAME BM-H14DSP_VERA			DRAWINGNO CNIT0302K1D0DL	
DESIGNED	ZHUHUI 00746	DATE 2024/10/22	SHEET 229 OF 276	REV
REVIEWED	GUBIN 00260	DATE 2024/11/22	Thu Jan 02 21:06:21 2025	

THIS DOCUMENT AND THE TECHNICAL DATA DISCLOSED ARE PROPRIETARY TO CNIT TECHNOLOGIES CO., LTD. AND SHALL NOT BE DUPLICATED USED RELEASED OR DISCLOSED WITHOUT EXPRESSING WRITTEN PERMISSION.

P1V2_STBY

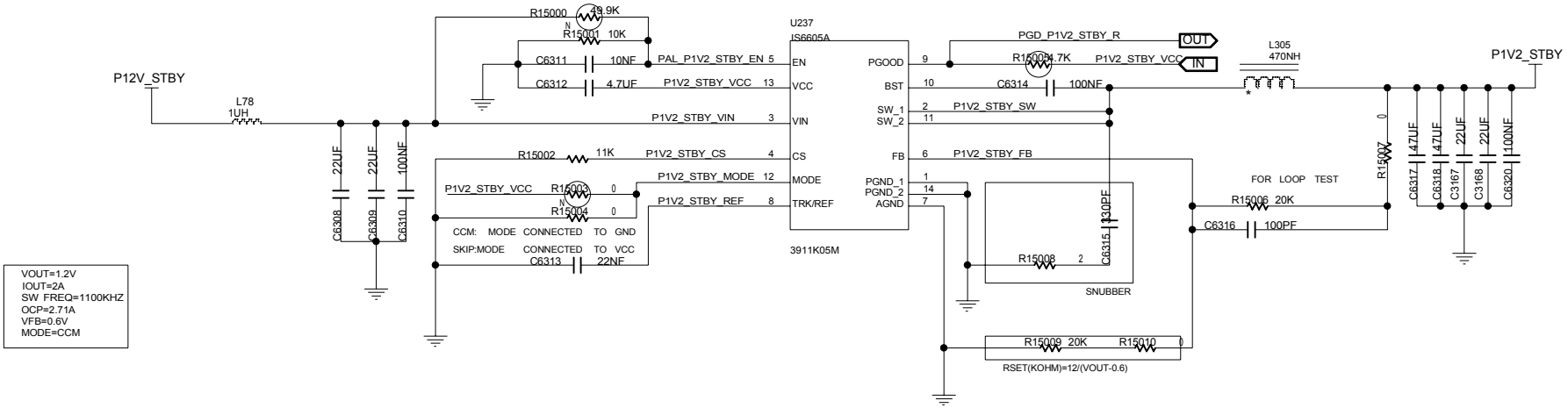

VOUT=1.2V
IOUT=2A
SW FREQ=1100KHZ
OCP=2.71A
VFB=0.6V
MODE=CCM

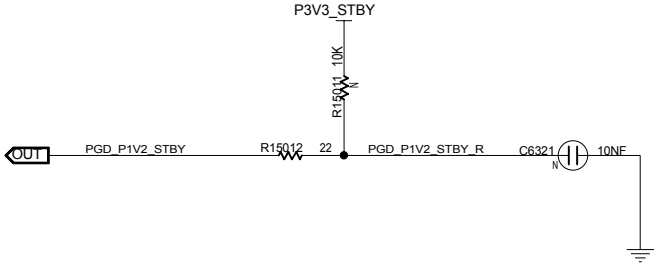

MODULE=---
FUNCTION=---

CNIT TECHNOLOGIES CO.,LTD.				
BOARD NAME BM-H14DSP_VERA			DRAWINGNO CNIT0302K1D0DL	
DESIGNED	ZHUHUI 00746	DATE 2024/10/22	SHEET 230 OF 276	REV
REVIEWED	GUBIN 00260	DATE 2024/11/22	Fri Dec 27 14:09:22 2024	

THIS DOCUMENT AND THE TECHNICAL DATA DISCLOSED ARE PROPRIETARY TO CNIT TECHNOLOGIES CO., LTD. AND SHALL NOT BE DUPLICATED USED RELEASED OR DISCLOSED WITHOUT EXPRESSING WRITTEN PERMISSION.

P5V

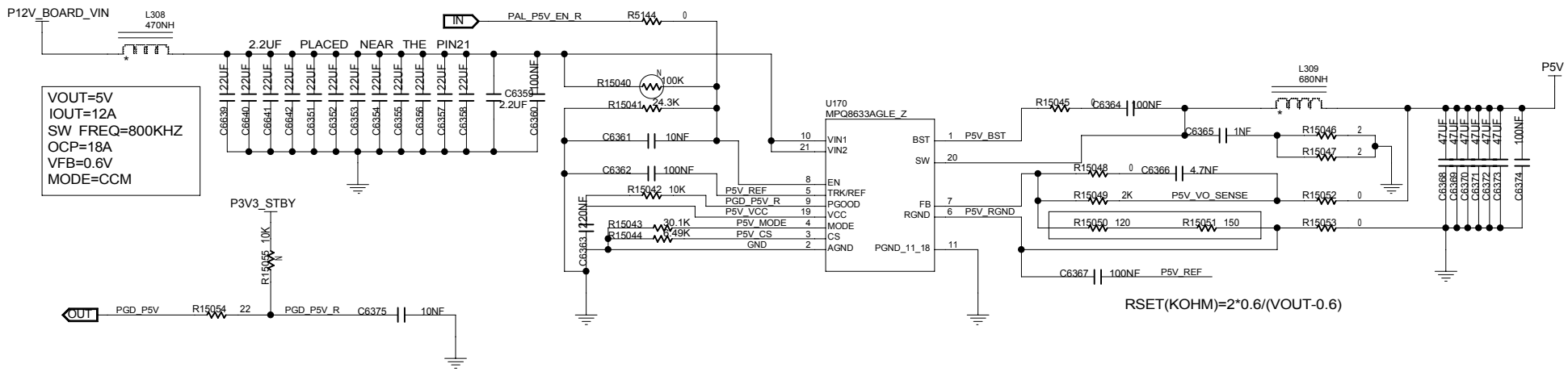

MODULE=---

FUNCTION=---

CNIT TECHNOLOGIES CO.,LTD.				
BOARD NAME BM-H14DSP_VERA			DRAWINGNO CNIT0302K1D0DL	
DESIGNED	ZHUHUI 00746	DATE 2024/10/22	SHEET 231 OF 276	REV
REVIEWED	GUBIN 00260	DATE 2024/11/22	Thu Jan 02 21:06:26 2025	

THIS DOCUMENT AND THE TECHNICAL DATA DISCLOSED ARE PROPRIETARY TO CNIT TECHNOLOGIES CO., LTD. AND SHALL NOT BE DUPLICATED USED RELEASED OR DISCLOSED WITHOUT EXPRESSING WRITTEN PERMISSION.

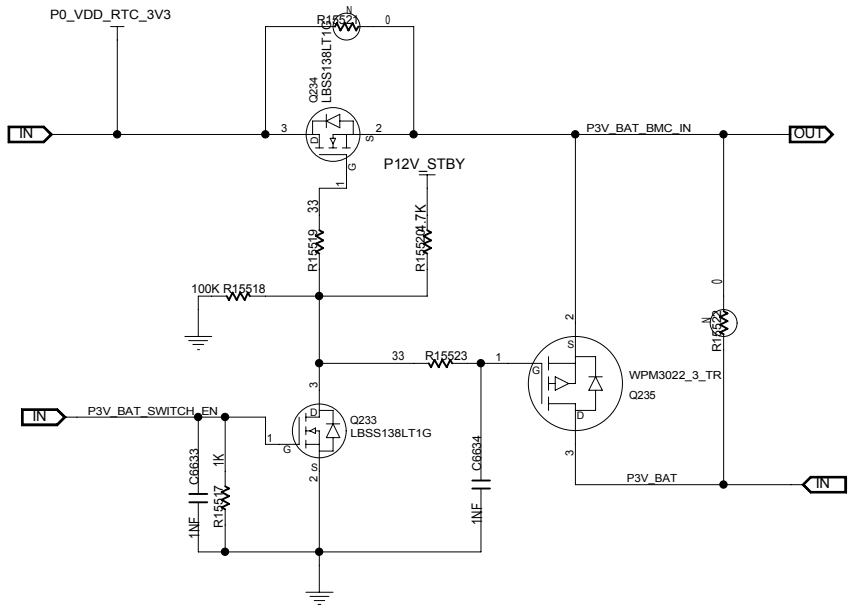

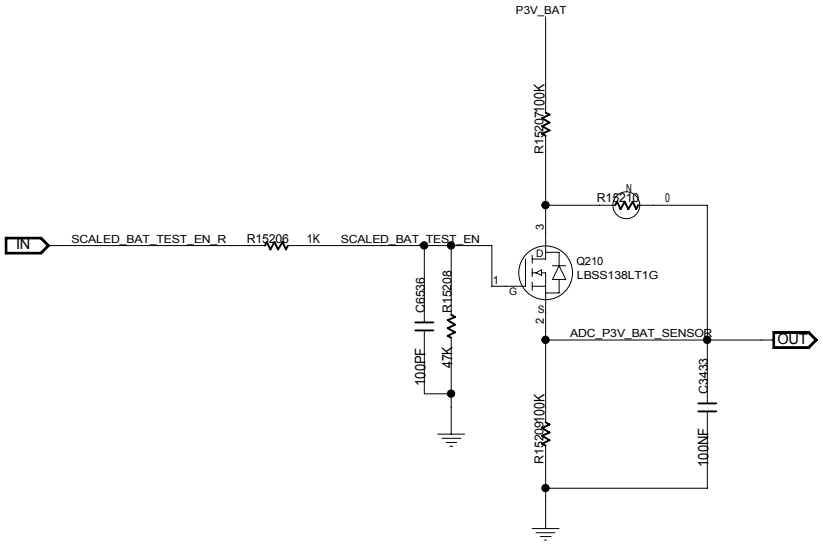

MODULE=---

FUNCTION=---

CNIT TECHNOLOGIES CO.,LTD.				
BOARD NAME BM-H14DSP_VERA			DRAWINGNO CNIT0302K1D0DL	
DESIGNED	ZHUHUI 00746	DATE 2024/10/22	SHEET 232 OF 276	REV
REVIEWED	GUBIN 00260	DATE 2024/11/22	Thu Jan 02 21:06:31 2025	

THIS DOCUMENT AND THE TECHNICAL DATA DISCLOSED ARE PROPRIETARY TO CNIT TECHNOLOGIES CO., LTD. AND SHALL NOT BE DUPLICATED USED RELEASED OR DISCLOSED WITHOUT EXPRESSING WRITTEN PERMISSION.

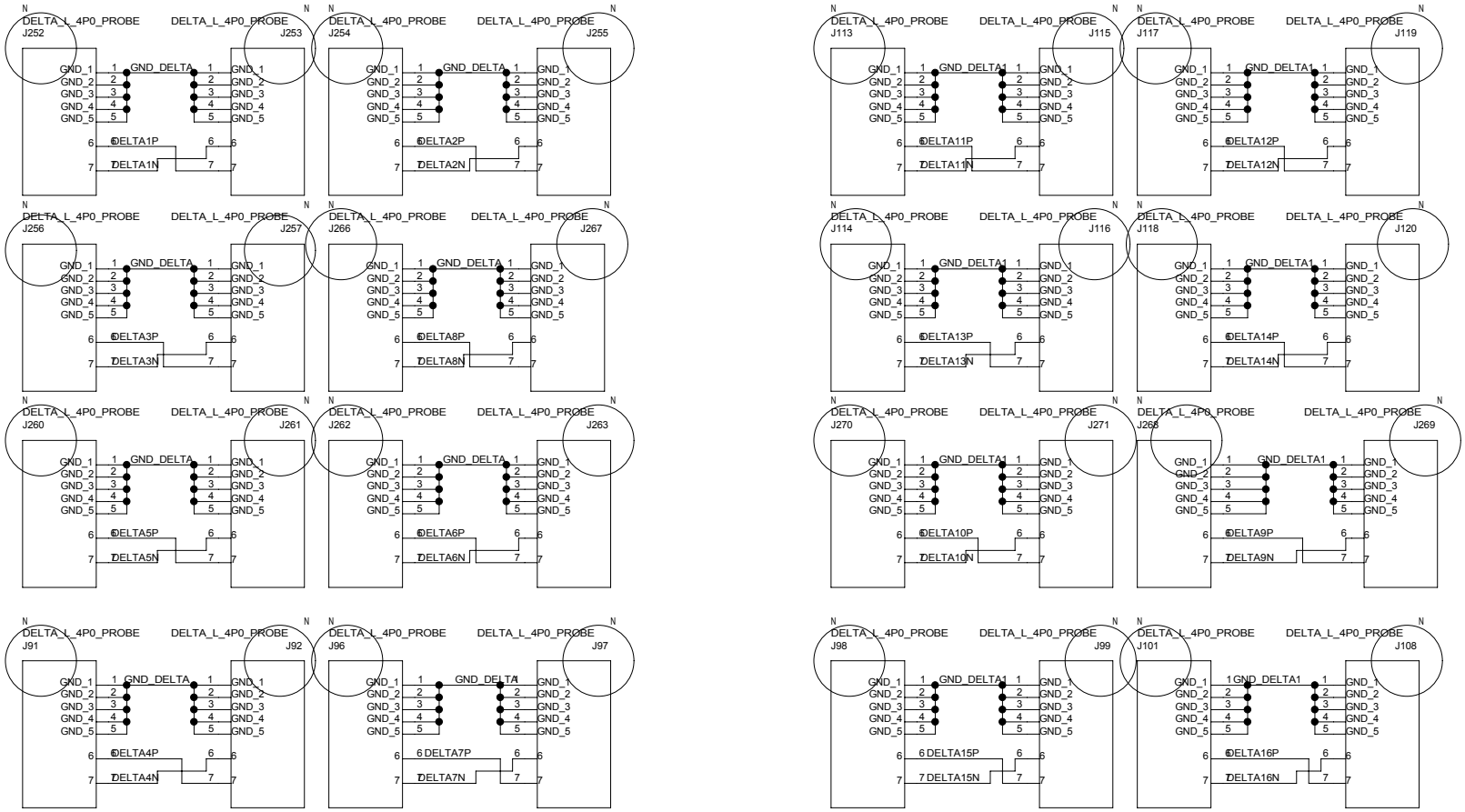

MODULE=---

FUNCTION=---

CNIT TECHNOLOGIES CO.,LTD.				
BOARD NAME BM-H14DSP_VERA			DRAWINGNO CNIT0302K1D0DL	
DESIGNED	ZHUHUI 00746	DATE 2024/10/22	SHEET 233 OF 276	REV
REVIEWED	GUBIN 00260	DATE 2024/11/22	Thu Jan 02 21:06:36 2025	

THIS DOCUMENT AND THE TECHNICAL DATA DISCLOSED ARE PROPRIETARY TO CNIT TECHNOLOGIES CO., LTD. AND SHALL NOT BE DUPLICATED USED RELEASED OR DISCLOSED WITHOUT EXPRESSING WRITTEN PERMISSION.

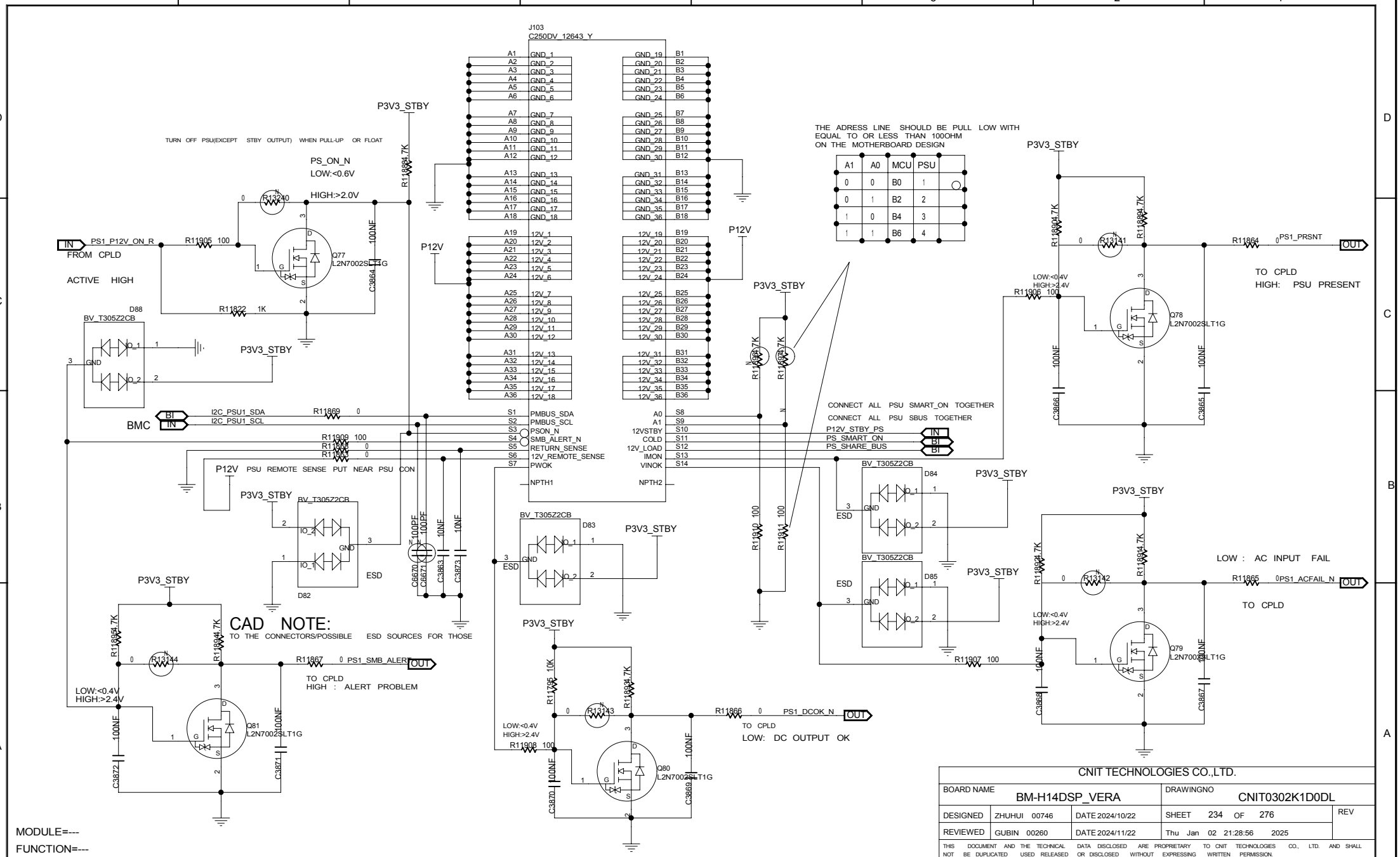

CNIT TECHNOLOGIES CO.,LTD.				
BOARD NAME	BM-H14DSP_VERA		DRAWINGNO	CNIT0302K1D0DL
DESIGNED	ZHUHUI 00746	DATE 2024/10/22	SHEET 234 OF 276	REV
REVIEWED	GUBIN 00260	DATE 2024/11/22	Thu Jan 02 21:28:56 2025	

THIS DOCUMENT AND THE TECHNICAL DATA DISCLOSED ARE PROPRIETARY TO CNIT TECHNOLOGIES CO., LTD. AND SHALL NOT BE DUPLICATED USED RELEASED OR DISCLOSED WITHOUT EXPRESSING WRITTEN PERMISSION.

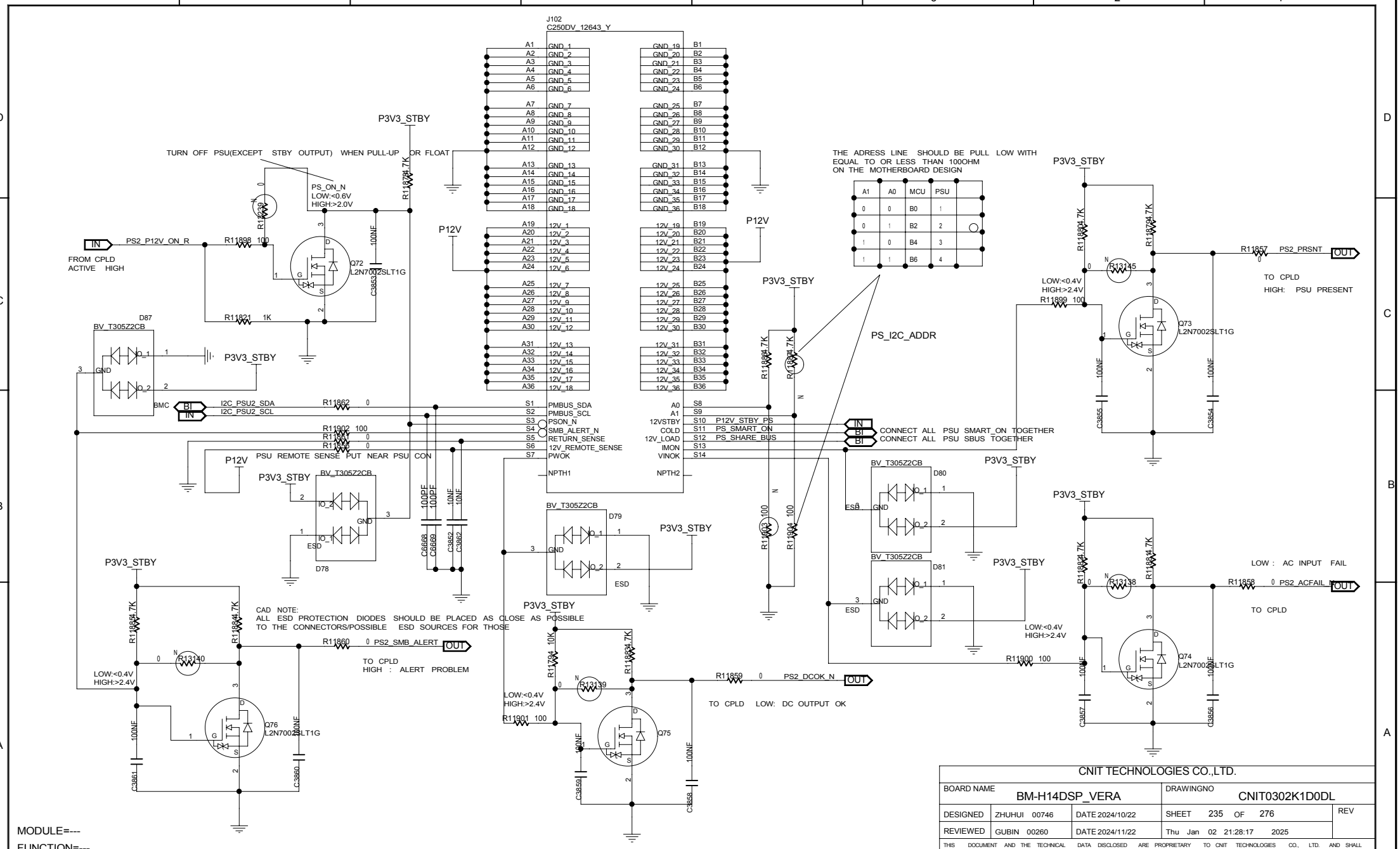

CNIT TECHNOLOGIES CO.,LTD.				
BOARD NAME	BM-H14DSP_VERA		DRAWINGNO	CNIT0302K1D0DL
DESIGNED	ZHUHUI 00746	DATE 2024/10/22	SHEET 235 OF 276	REV
REVIEWED	GUBIN 00260	DATE 2024/11/22	Thu Jan 02 21:28:17 2025	

THIS DOCUMENT AND THE TECHNICAL DATA DISCLOSED ARE PROPRIETARY TO CNIT TECHNOLOGIES CO., LTD. AND SHALL NOT BE DUPLICATED USED RELEASED OR DISCLOSED WITHOUT EXPRESSING WRITTEN PERMISSION.

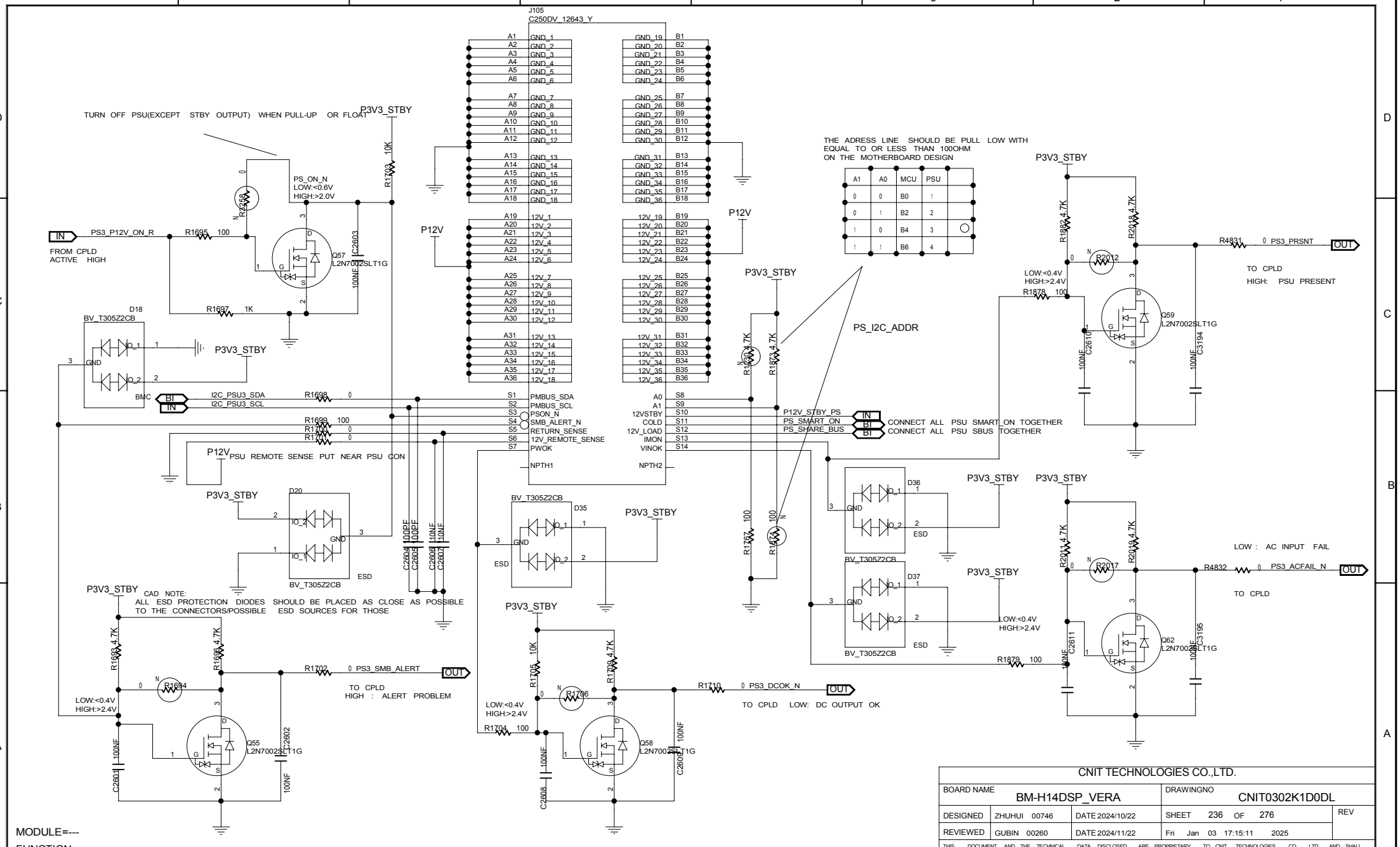

CNIT TECHNOLOGIES CO.,LTD.				
BOARD NAME	BM-H14DSP_VERA		DRAWINGNO	CNIT0302K1D0DL
DESIGNED	ZHUHUI 00746	DATE 2024/10/22	SHEET 236 OF 276	REV
REVIEWED	GUBIN 00260	DATE 2024/11/22	Fri Jan 03 17:15:11 2025	

THIS DOCUMENT AND THE TECHNICAL DATA DISCLOSED ARE PROPRIETARY TO CNIT TECHNOLOGIES CO., LTD. AND SHALL NOT BE DUPLICATED USED RELEASED OR DISCLOSED WITHOUT EXPRESSING WRITTEN PERMISSION.

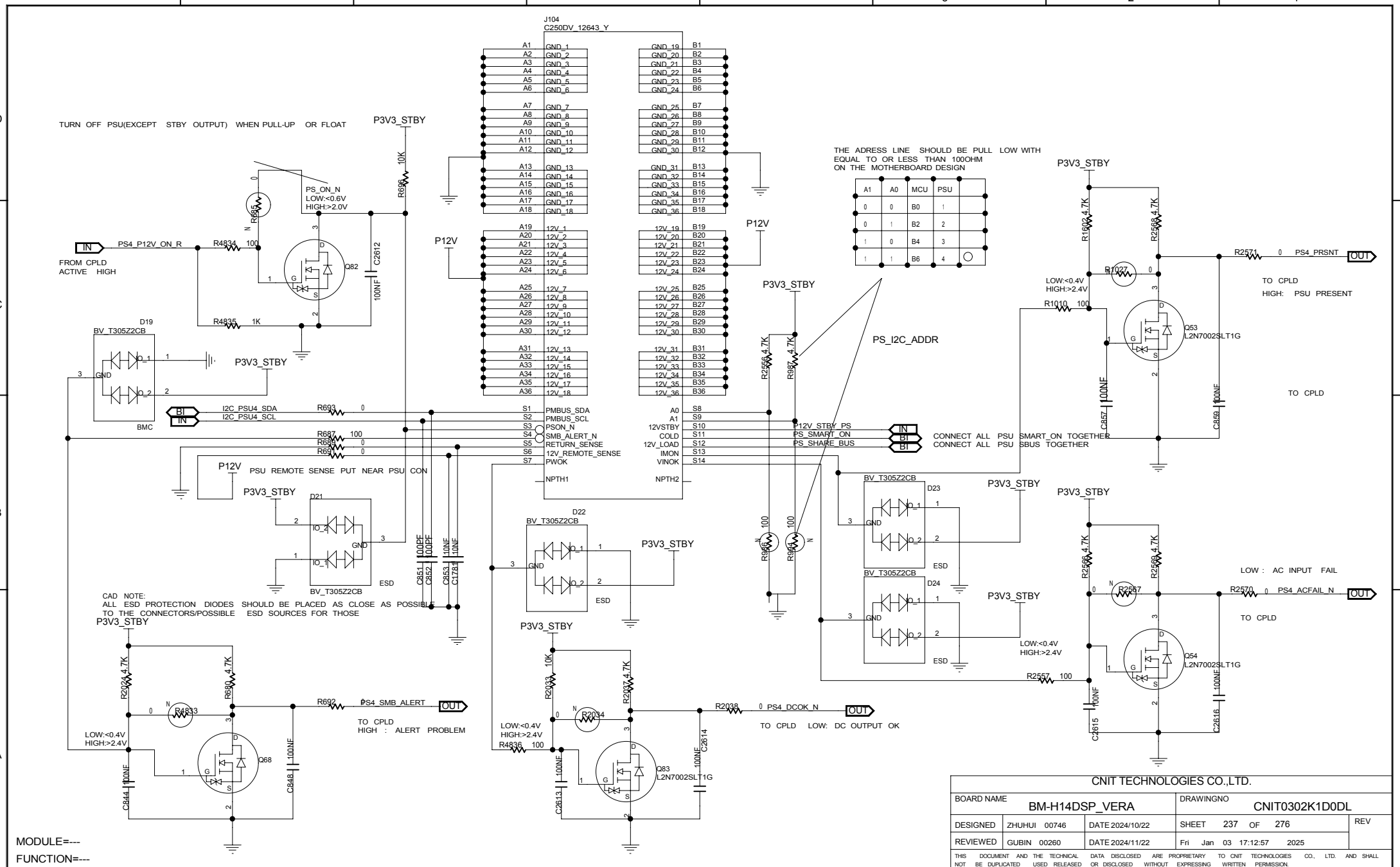

CNIT TECHNOLOGIES CO.,LTD.				
BOARD NAME	BM-H14DSP_VERA		DRAWINGNO	CNIT0302K1D0DL
DESIGNED	ZHUHUI 00746	DATE 2024/10/22	SHEET 237 OF 276	REV
REVIEWED	GUBIN 00260	DATE 2024/11/22	Fri Jan 03 17:12:57 2025	

THIS DOCUMENT AND THE TECHNICAL DATA DISCLOSED ARE PROPRIETARY TO CNIT TECHNOLOGIES CO., LTD. AND SHALL NOT BE DUPLICATED USED RELEASED OR DISCLOSED WITHOUT EXPRESSING WRITTEN PERMISSION.

REAR BP PWR

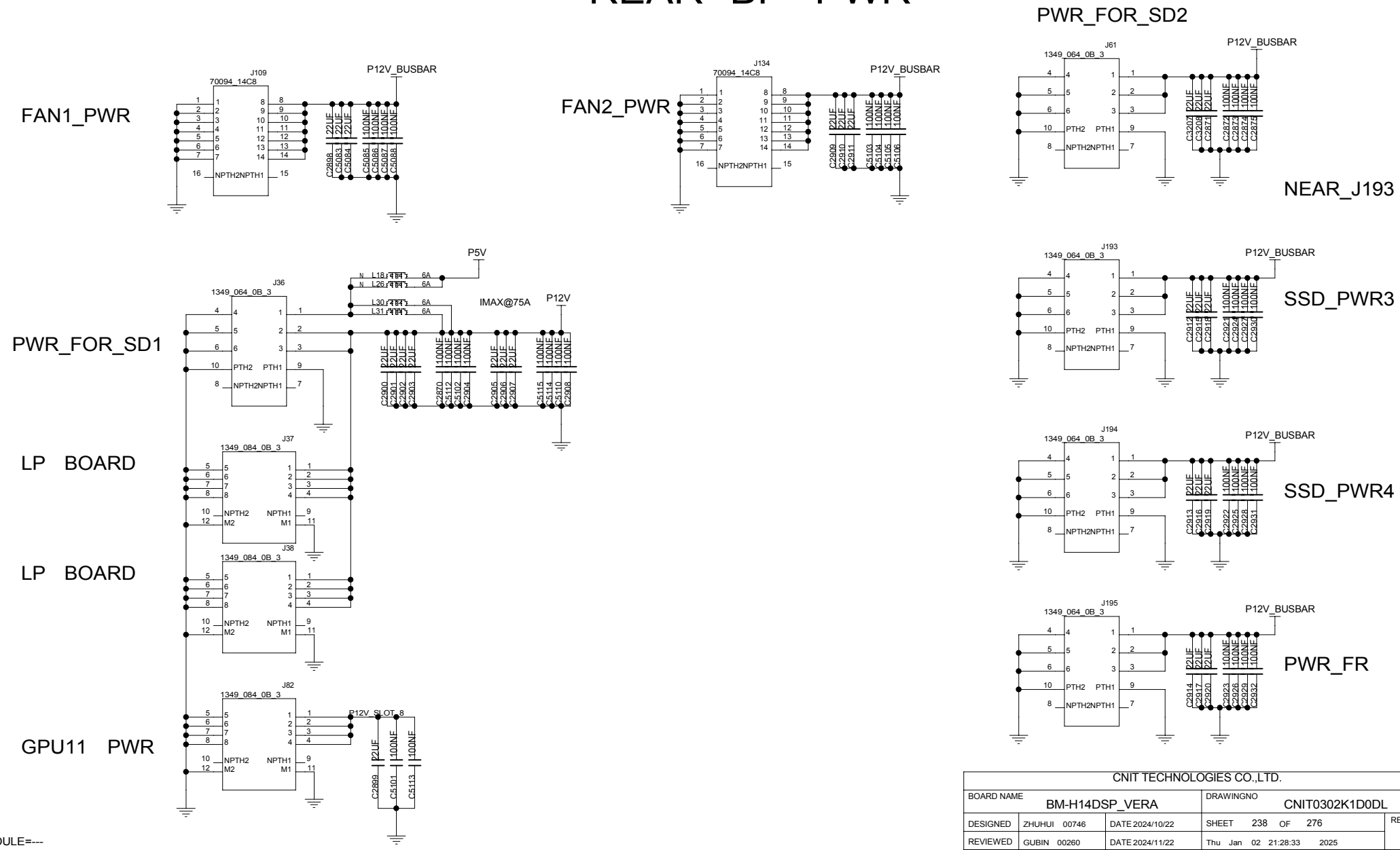

MODULE=---

FUNCTION=---

CNIT TECHNOLOGIES CO.,LTD.				
BOARD NAME BM-H14DSP_VERA			DRAWINGNO CNIT0302K1D0DL	
DESIGNED	ZHUHUI 00746	DATE 2024/10/22	SHEET 238 OF 276	REV
REVIEWED	GUBIN 00260	DATE 2024/11/22	Thu Jan 02 21:28:33 2025	

THIS DOCUMENT AND THE TECHNICAL DATA DISCLOSED ARE PROPRIETARY TO CNIT TECHNOLOGIES CO., LTD. AND SHALL NOT BE DUPLICATED USED RELEASED OR DISCLOSED WITHOUT EXPRESSING WRITTEN PERMISSION.

ADDING_CONN1

PWR FOR GPU CARD1

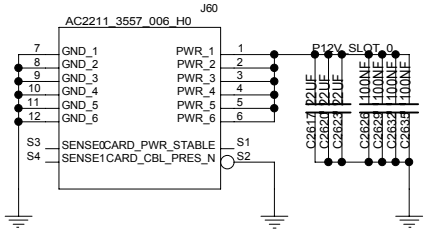

PWR FOR GPU CARD4

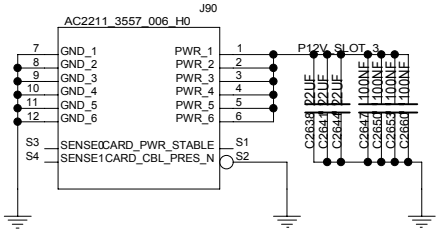

PWR FOR GPU CARD7

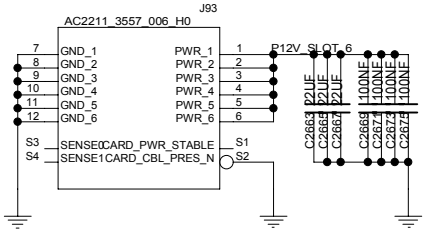

PWR FOR GPU CARD2

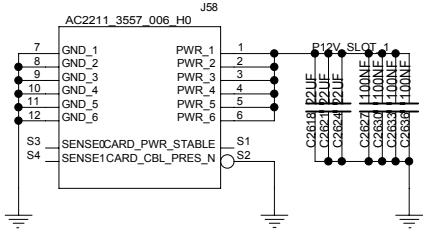

PWR FOR GPU CARD5

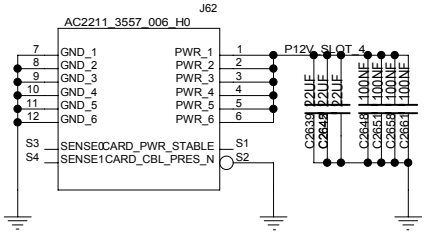

PWR FOR GPU CARD8

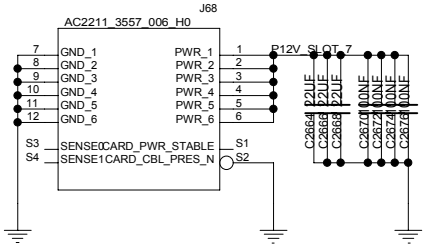

PWR FOR GPU CARD3

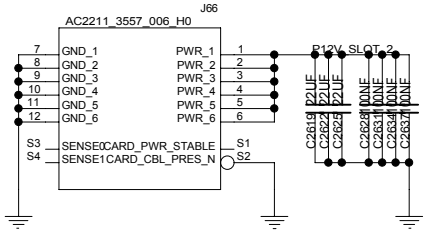

PWR FOR GPU CARD6

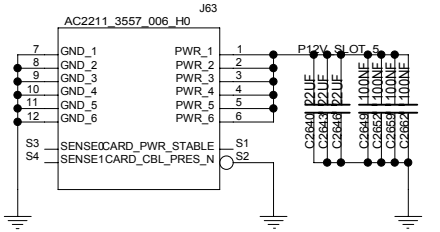

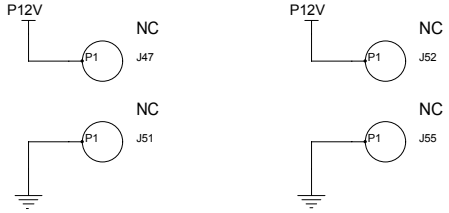

MODULE=---

FUNCTION=---

CNIT TECHNOLOGIES CO.,LTD.				
BOARD NAME BM-H14DSP_VERA			DRAWINGNO CNIT0302K1D0DL	
DESIGNED	ZHUHUI 00746	DATE 2024/10/22	SHEET 239 OF 276	REV
REVIEWED	GUBIN 00260	DATE 2024/11/22	Thu Jan 02 21:28:38 2025	

THIS DOCUMENT AND THE TECHNICAL DATA DISCLOSED ARE PROPRIETARY TO CNIT TECHNOLOGIES CO., LTD. AND SHALL NOT BE DUPLICATED USED RELEASED OR DISCLOSED WITHOUT EXPRESSING WRITTEN PERMISSION.

ADDING_CONN2

PWR FOR GPU CARD9

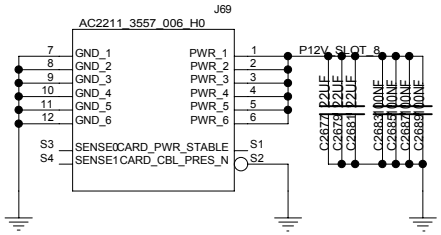

PWR FOR SWTICH1

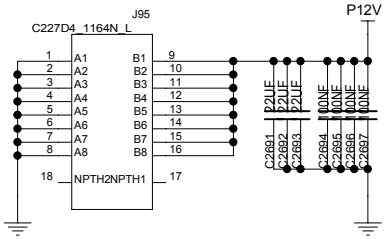

PWR_FOR_RISER_LEFT

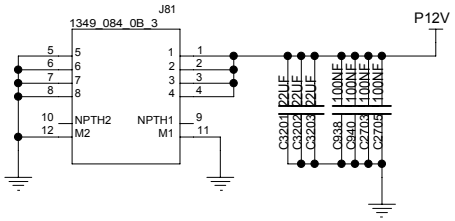

PWR FOR GPU CARD10

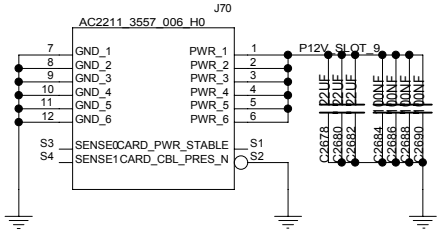

PWR FOR SWITCH2

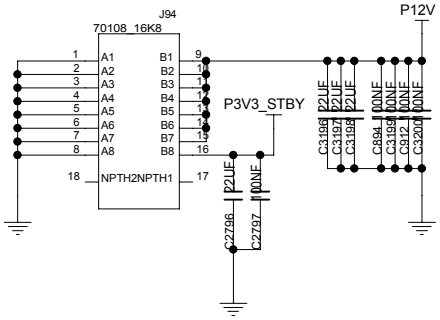

PWR_FOR_FRONT_BOARD

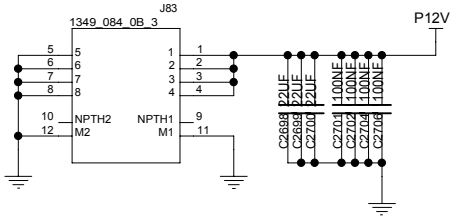

MODULE=---

FUNCTION=---

CNIT TECHNOLOGIES CO.,LTD.				
BOARD NAME BM-H14DSP_VERA			DRAWINGNO CNIT0302K1D0DL	
DESIGNED	ZHUHUI 00746	DATE 2024/10/22	SHEET 240 OF 276	REV
REVIEWED	GUBIN 00260	DATE 2024/11/22	Thu Jan 02 21:28:42 2025	

THIS DOCUMENT AND THE TECHNICAL DATA DISCLOSED ARE PROPRIETARY TO CNIT TECHNOLOGIES CO., LTD. AND SHALL NOT BE DUPLICATED USED RELEASED OR DISCLOSED WITHOUT EXPRESSING WRITTEN PERMISSION.

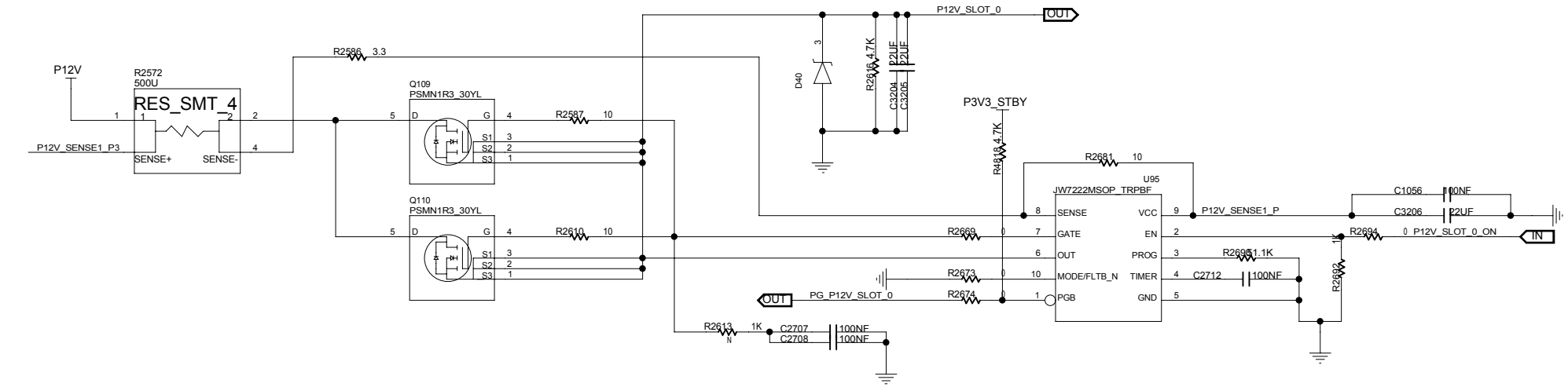

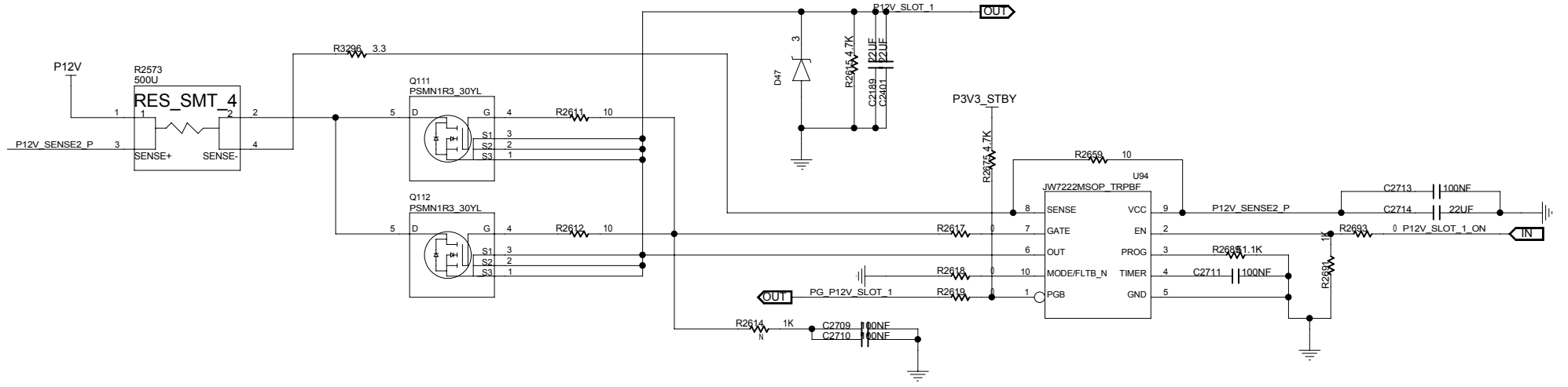

MODULE=---

FUNCTION=---

CNIT TECHNOLOGIES CO.,LTD.				
BOARD NAME BM-H14DSP_VERA			DRAWINGNO CNIT0302K1D0DL	
DESIGNED	ZHUHUI 00746	DATE 2024/10/22	SHEET 241 OF 276	REV
REVIEWED	GUBIN 00260	DATE 2024/11/22	Thu Jan 02 21:28:47 2025	

THIS DOCUMENT AND THE TECHNICAL DATA DISCLOSED ARE PROPRIETARY TO CNIT TECHNOLOGIES CO., LTD. AND SHALL NOT BE DUPLICATED USED RELEASED OR DISCLOSED WITHOUT EXPRESSING WRITTEN PERMISSION.

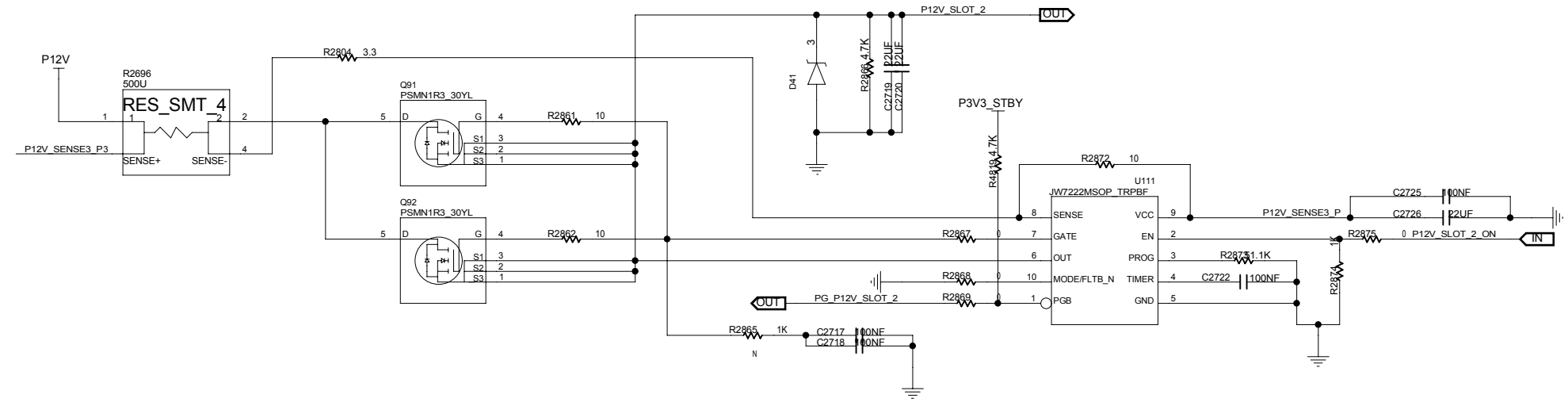

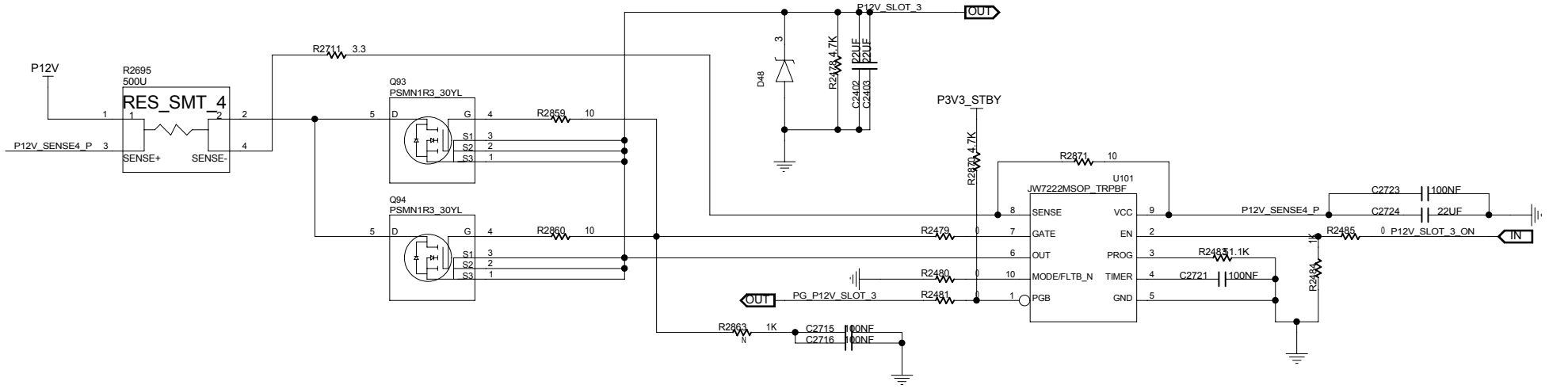

MODULE=---

FUNCTION=---

CNIT TECHNOLOGIES CO.,LTD.				
BOARD NAME BM-H14DSP_VERA			DRAWINGNO CNIT0302K1D0DL	
DESIGNED	ZHUHUI 00746	DATE 2024/10/22	SHEET 242 OF 276	REV
REVIEWED	GUBIN 00260	DATE 2024/11/22	Thu Jan 02 21:28:52 2025	

THIS DOCUMENT AND THE TECHNICAL DATA DISCLOSED ARE PROPRIETARY TO CNIT TECHNOLOGIES CO., LTD. AND SHALL NOT BE DUPLICATED USED RELEASED OR DISCLOSED WITHOUT EXPRESSING WRITTEN PERMISSION.

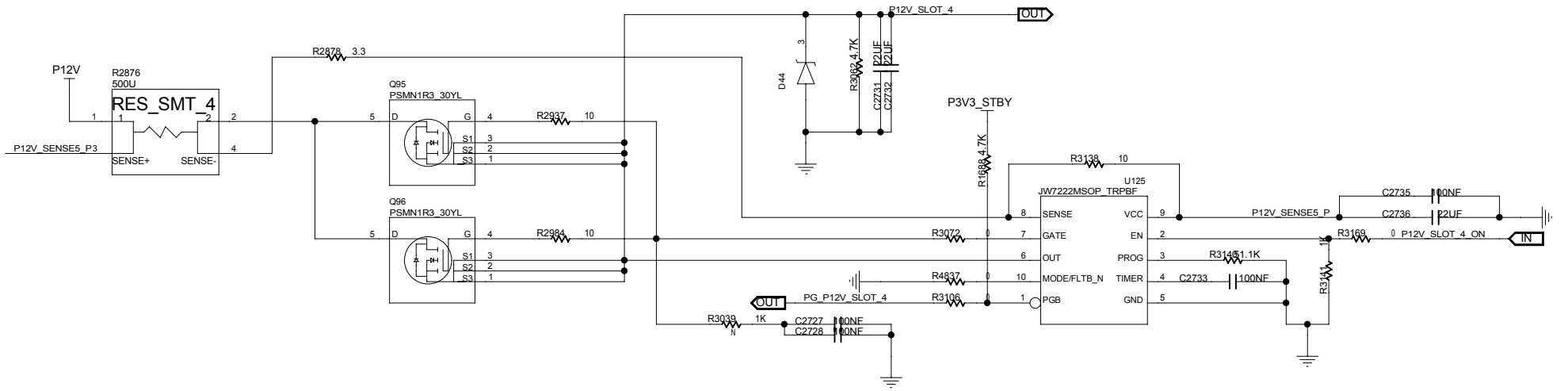

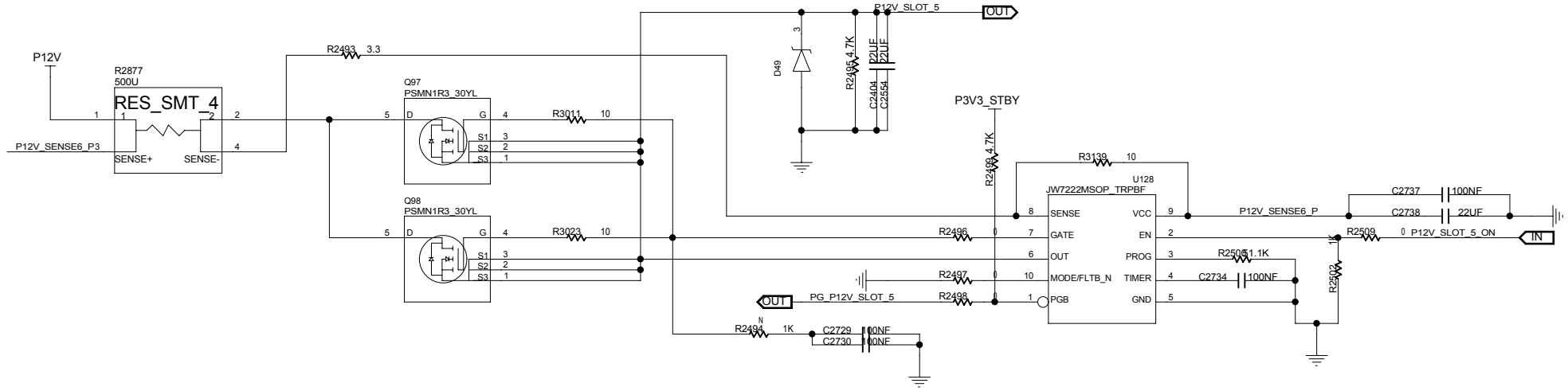

CNIT TECHNOLOGIES CO.,LTD.				
BOARD NAME BM-H14DSP_VERA			DRAWINGNO CNIT0302K1D0DL	
DESIGNED	ZHUHUI 00746	DATE 2024/10/22	SHEET 243 OF 276	REV
REVIEWED	GUBIN 00260	DATE 2024/11/22	Thu Jan 02 21:29:01 2025	

THIS DOCUMENT AND THE TECHNICAL DATA DISCLOSED ARE PROPRIETARY TO CNIT TECHNOLOGIES CO., LTD. AND SHALL NOT BE DUPLICATED USED RELEASED OR DISCLOSED WITHOUT EXPRESSING WRITTEN PERMISSION.

MODULE=---
FUNCTION=---

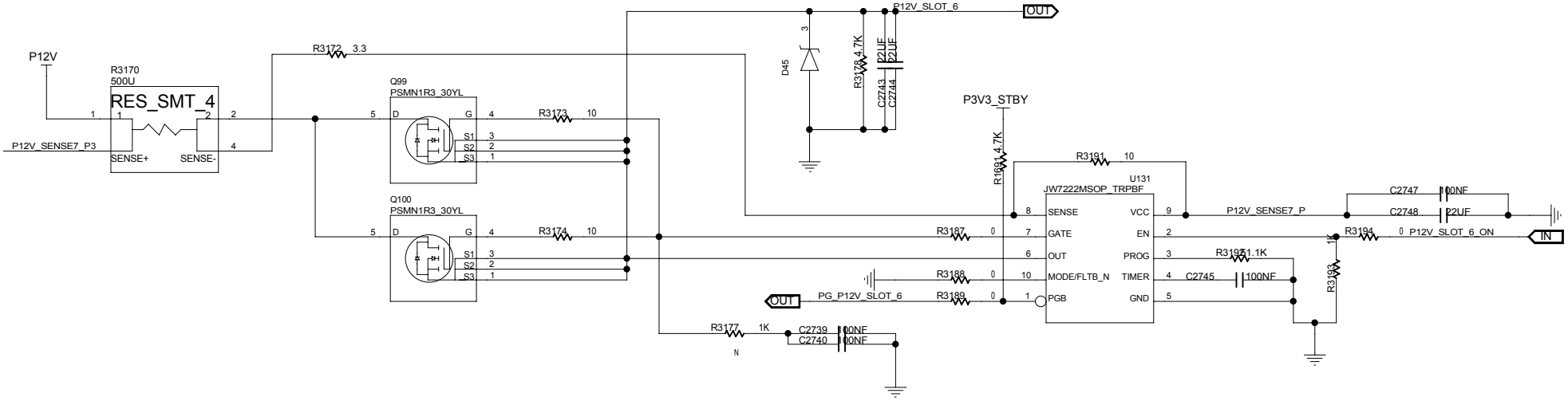

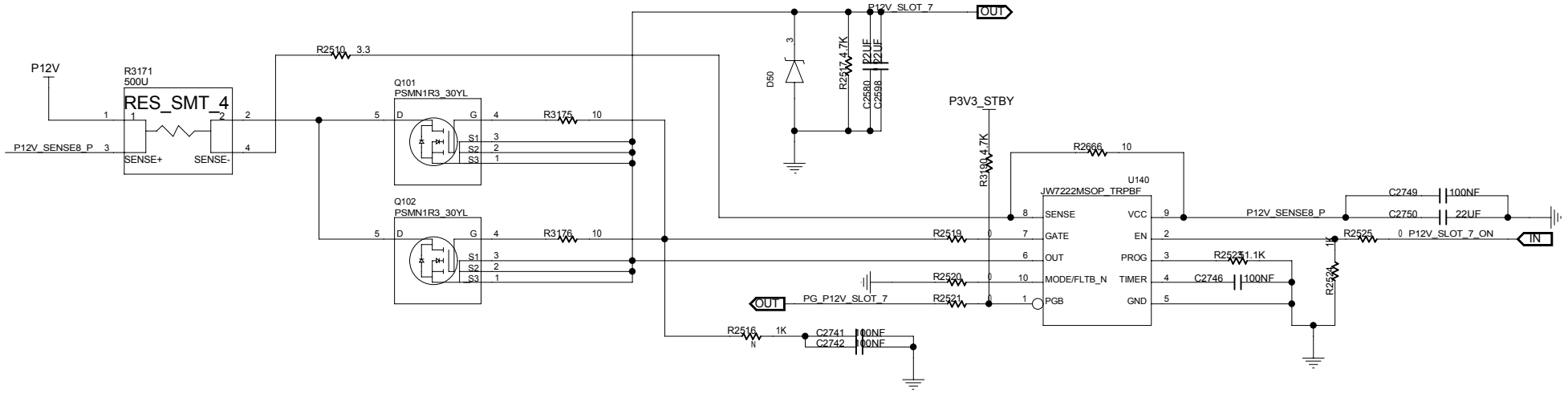

MODULE=---

FUNCTION=---

CNIT TECHNOLOGIES CO.,LTD.				
BOARD NAME BM-H14DSP_VERA			DRAWINGNO CNIT0302K1D0DL	
DESIGNED	ZHUHUI 00746	DATE 2024/10/22	SHEET 244 OF 276	REV
REVIEWED	GUBIN 00260	DATE 2024/11/22	Thu Jan 02 21:29:06 2025	

THIS DOCUMENT AND THE TECHNICAL DATA DISCLOSED ARE PROPRIETARY TO CNIT TECHNOLOGIES CO., LTD. AND SHALL NOT BE DUPLICATED USED RELEASED OR DISCLOSED WITHOUT EXPRESSING WRITTEN PERMISSION.

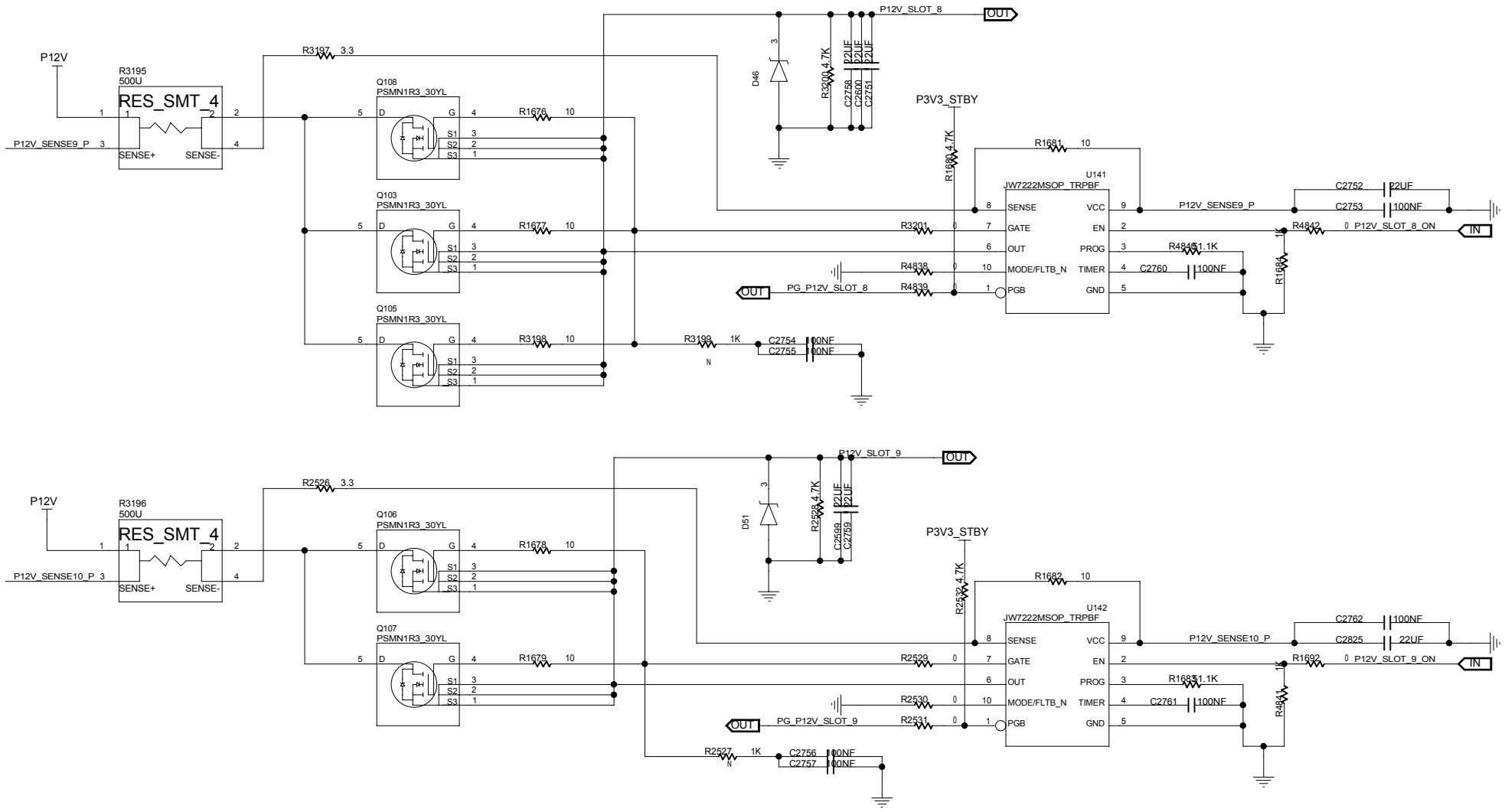

MODULE=---

FUNCTION=---

CNIT TECHNOLOGIES CO.,LTD.				
BOARD NAME BM-H14DSP_VERA			DRAWINGNO CNIT0302K1D0DL	
DESIGNED	ZHUHUI 00746	DATE 2024/10/22	SHEET 245 OF 276	REV
REVIEWED	GUBIN 00260	DATE 2024/11/22	Thu Jan 02 21:29:11 2025	

THIS DOCUMENT AND THE TECHNICAL DATA DISCLOSED ARE PROPRIETARY TO CNIT TECHNOLOGIES CO., LTD. AND SHALL NOT BE DUPLICATED USED RELEASED OR DISCLOSED WITHOUT EXPRESSING WRITTEN PERMISSION.

LEFT EAR

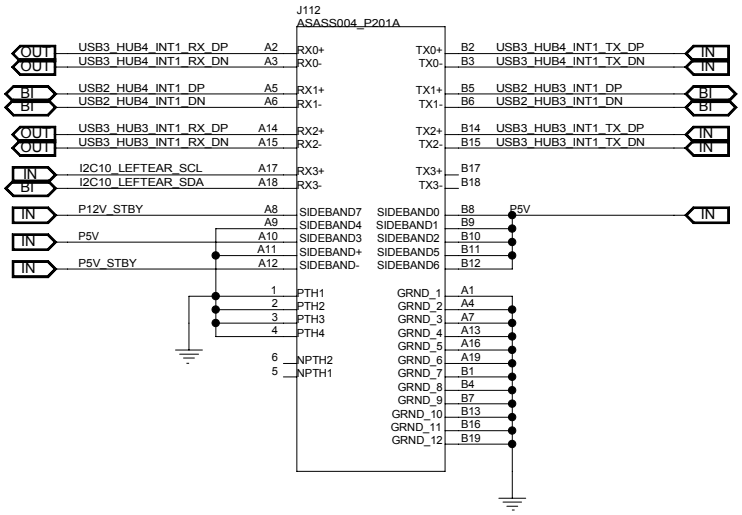

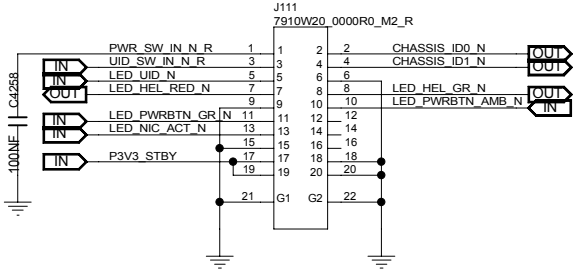

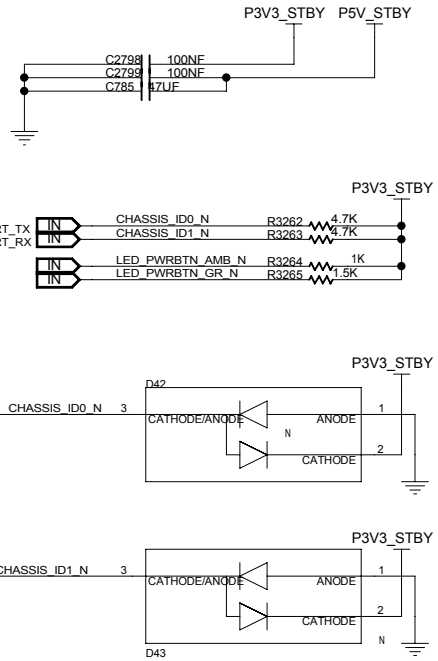

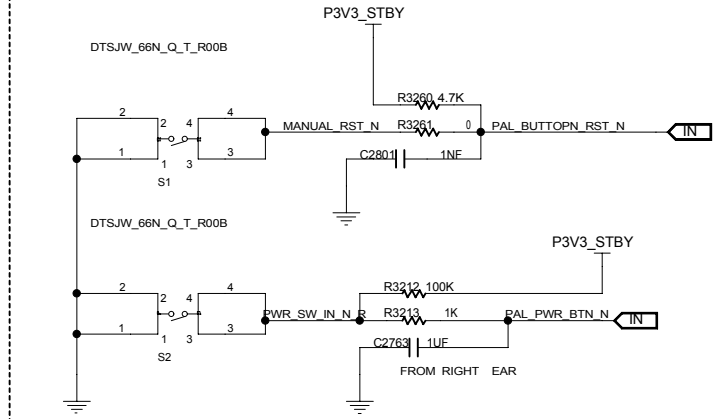

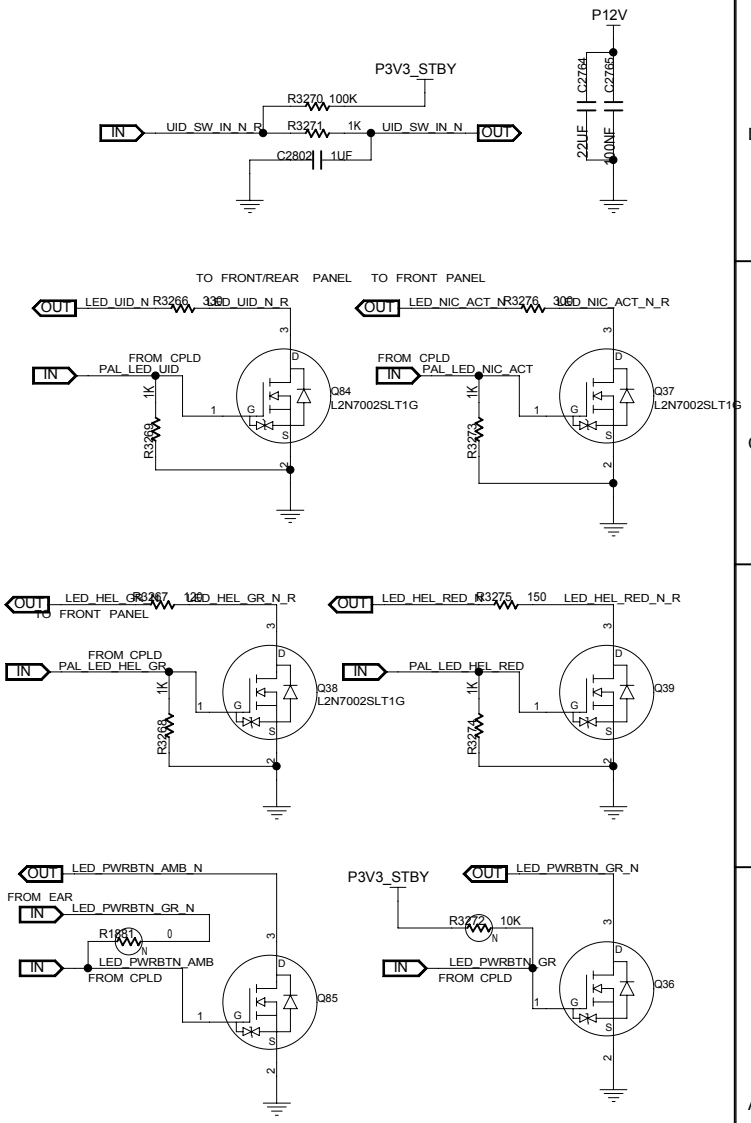

MODULE=---

FUNCTION=---

CNIT TECHNOLOGIES CO.,LTD.				
BOARD NAME BM-H14DSP_VERA			DRAWINGNO CNIT0302K1D0DL	
DESIGNED	ZHUHUI 00746	DATE 2024/10/22	SHEET 246 OF 276	REV
REVIEWED	GUBIN 00260	DATE 2024/11/22	Thu Jan 02 21:29:16 2025	

THIS DOCUMENT AND THE TECHNICAL DATA DISCLOSED ARE PROPRIETARY TO CNIT TECHNOLOGIES CO., LTD. AND SHALL NOT BE DUPLICATED USED RELEASED OR DISCLOSED WITHOUT EXPRESSING WRITTEN PERMISSION.

ABOUT INNER USB

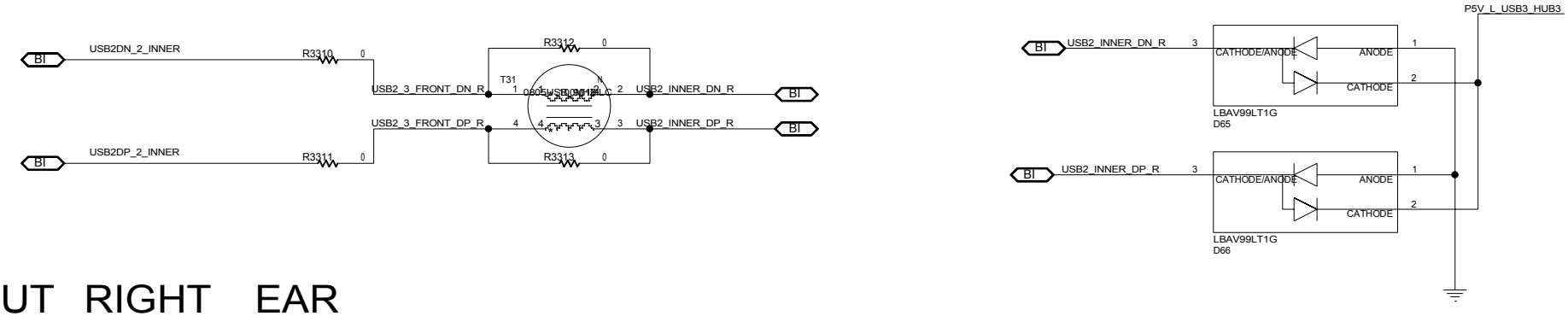

ABOUT RIGHT EAR

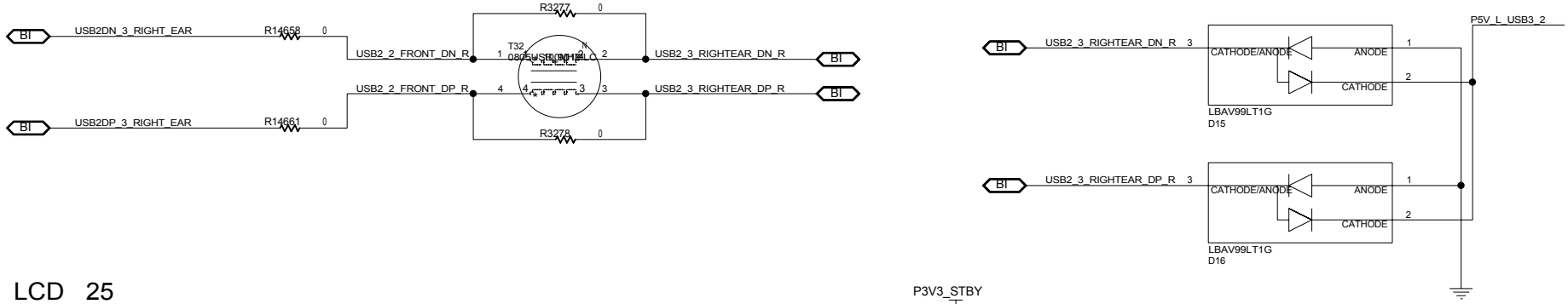

LCD 25

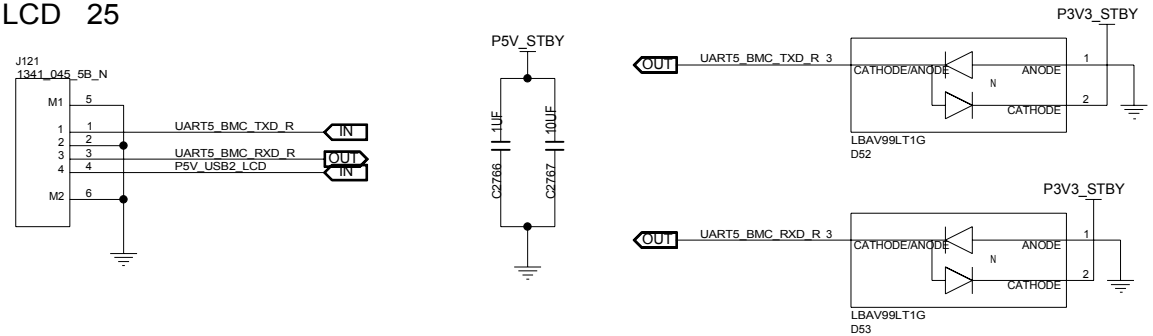

MODULE=---

FUNCTION=---

CNIT TECHNOLOGIES CO.,LTD.				
BOARD NAME BM-H14DSP_VERA			DRAWINGNO CNIT0302K1D0DL	
DESIGNED	ZHUHUI 00746	DATE 2024/10/22	SHEET 247 OF 276	REV
REVIEWED	GUBIN 00260	DATE 2024/11/22	Thu Jan 02 21:29:21 2025	

THIS DOCUMENT AND THE TECHNICAL DATA DISCLOSED ARE PROPRIETARY TO CNIT TECHNOLOGIES CO., LTD. AND SHALL NOT BE DUPLICATED USED RELEASED OR DISCLOSED WITHOUT EXPRESSING WRITTEN PERMISSION.

RIGHT EAR

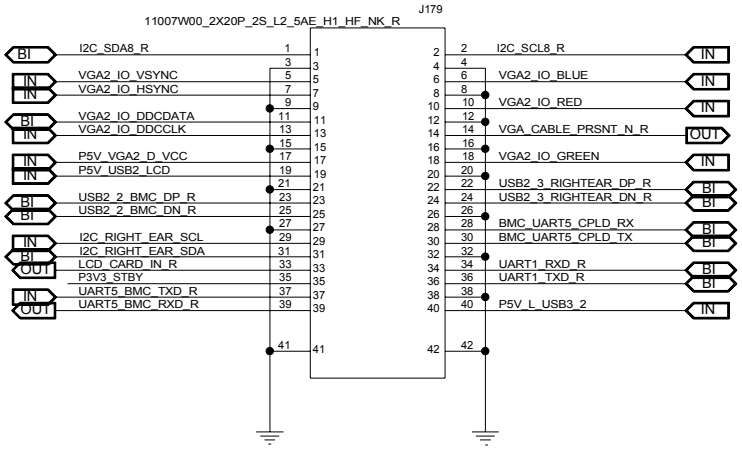

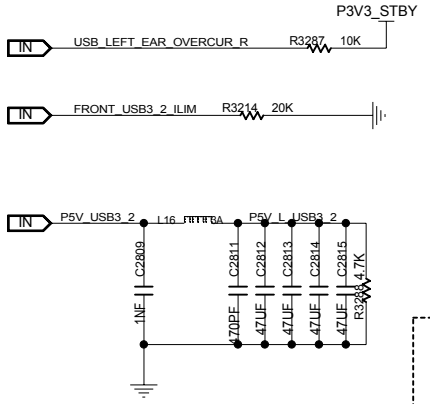

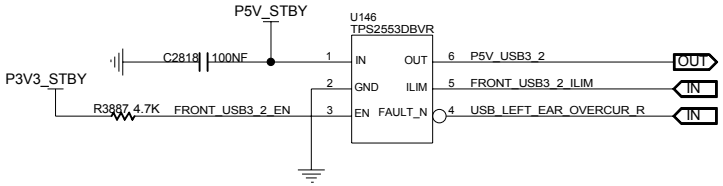

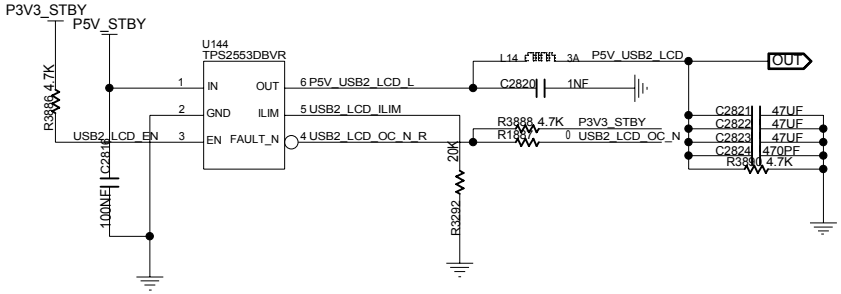

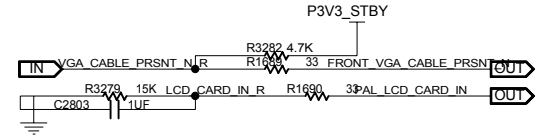

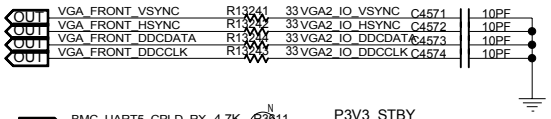

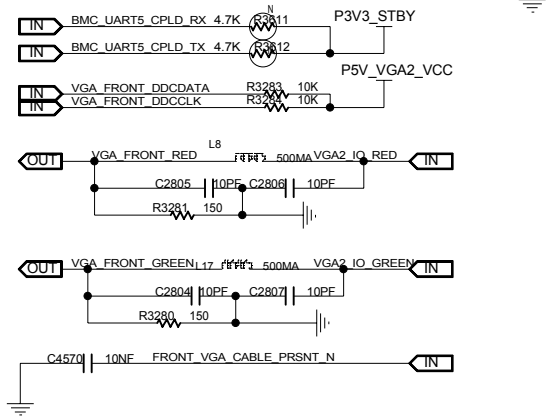

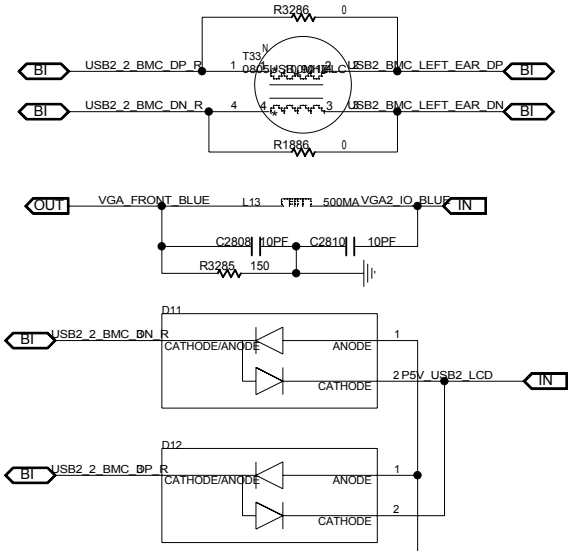

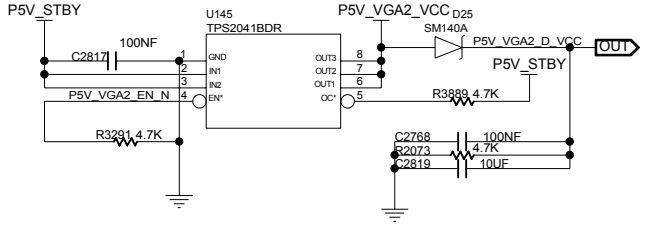

MODULE=---

FUNCTION=---

CNIT TECHNOLOGIES CO.,LTD.				
BOARD NAME BM-H14DSP_VERA			DRAWINGNO CNIT0302K1D0DL	
DESIGNED	ZHUHUI 00746	DATE 2024/10/22	SHEET 248 OF 276	REV
REVIEWED	GUBIN 00260	DATE 2024/11/22	Sat Apr 19 16:32:02 2025	

THIS DOCUMENT AND THE TECHNICAL DATA DISCLOSED ARE PROPRIETARY TO CNIT TECHNOLOGIES CO., LTD. AND SHALL NOT BE DUPLICATED USED RELEASED OR DISCLOSED WITHOUT EXPRESSING WRITTEN PERMISSION.

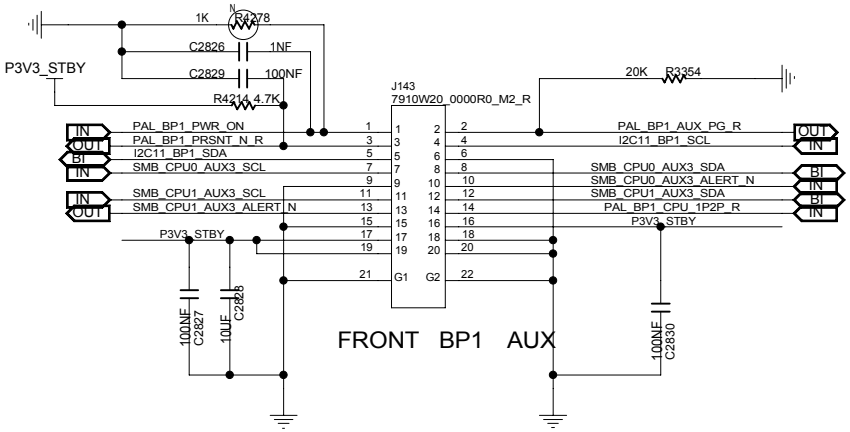

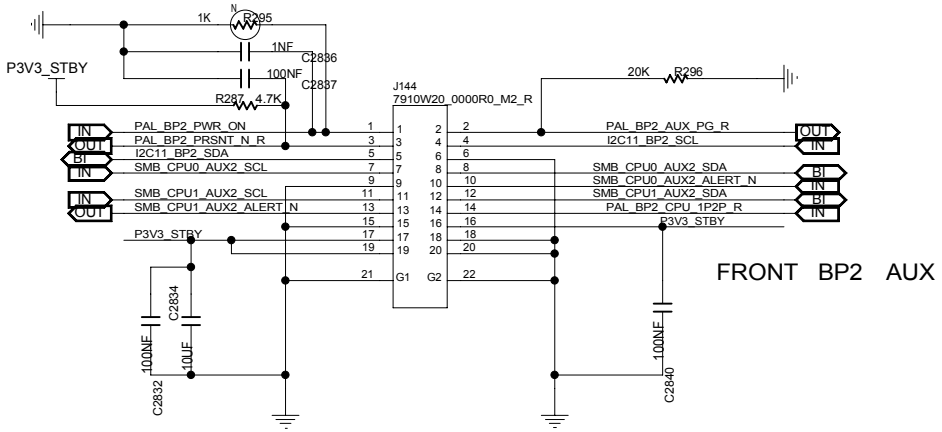

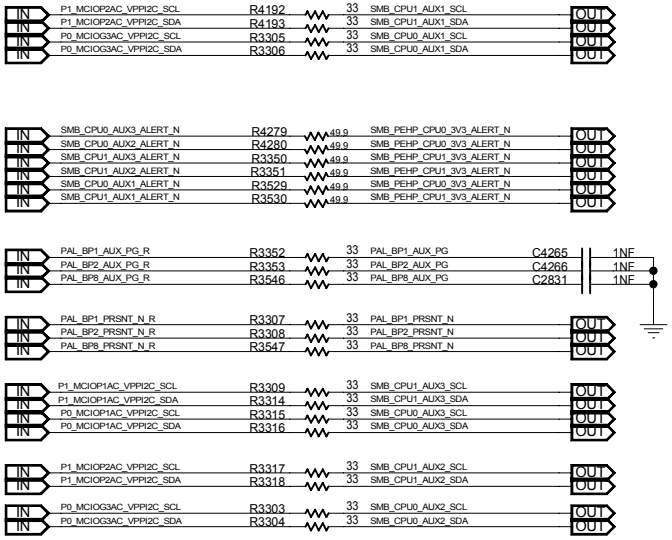

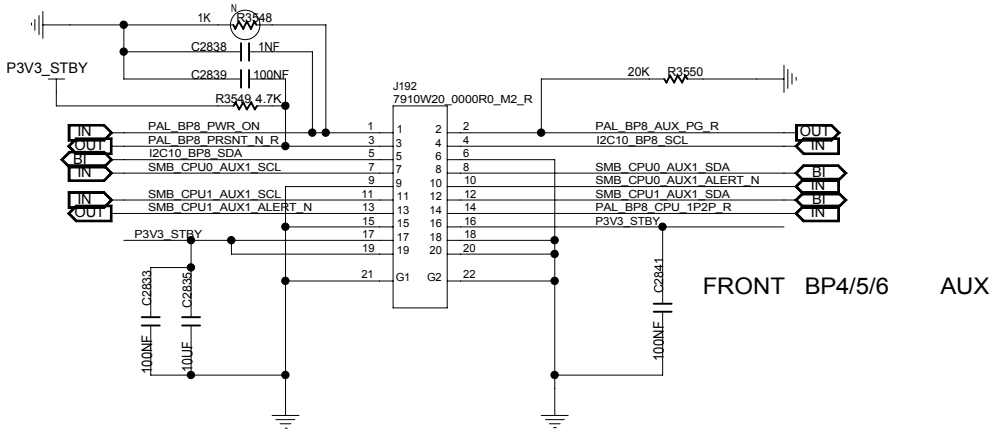

MODULE=---

FUNCTION=---

CNIT TECHNOLOGIES CO.,LTD.				
BOARD NAME BM-H14DSP_VERA			DRAWINGNO CNIT0302K1D0DL	
DESIGNED	ZHUHUI 00746	DATE 2024/10/22	SHEET 249 OF 276	REV
REVIEWED	GUBIN 00260	DATE 2024/11/22	Mon Jan 06 11:11:08 2025	

THIS DOCUMENT AND THE TECHNICAL DATA DISCLOSED ARE PROPRIETARY TO CNIT TECHNOLOGIES CO., LTD. AND SHALL NOT BE DUPLICATED USED RELEASED OR DISCLOSED WITHOUT EXPRESSING WRITTEN PERMISSION.

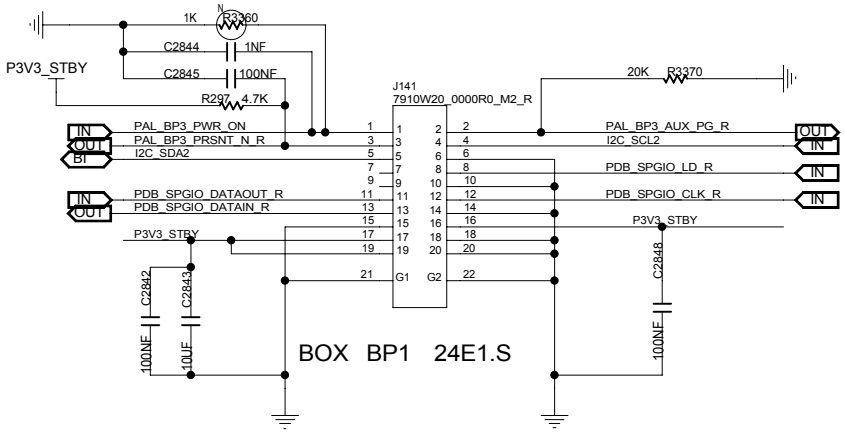

CONNECT TO FAN

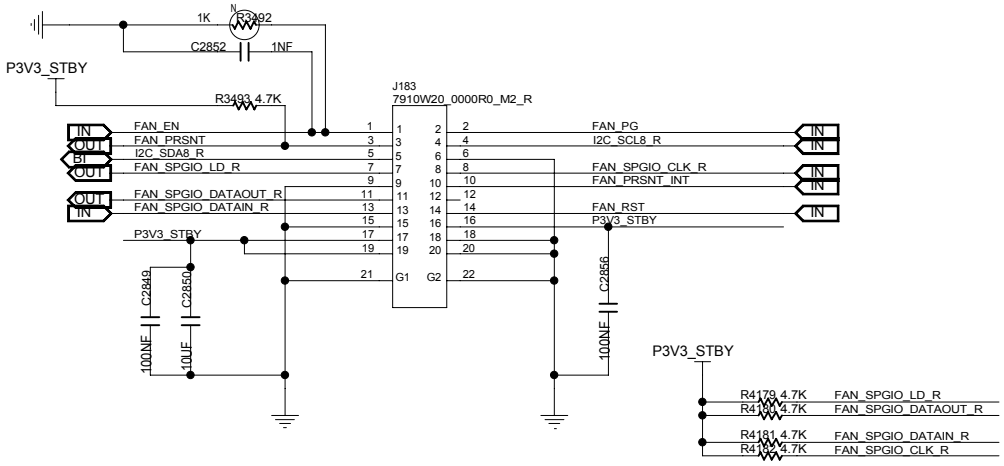

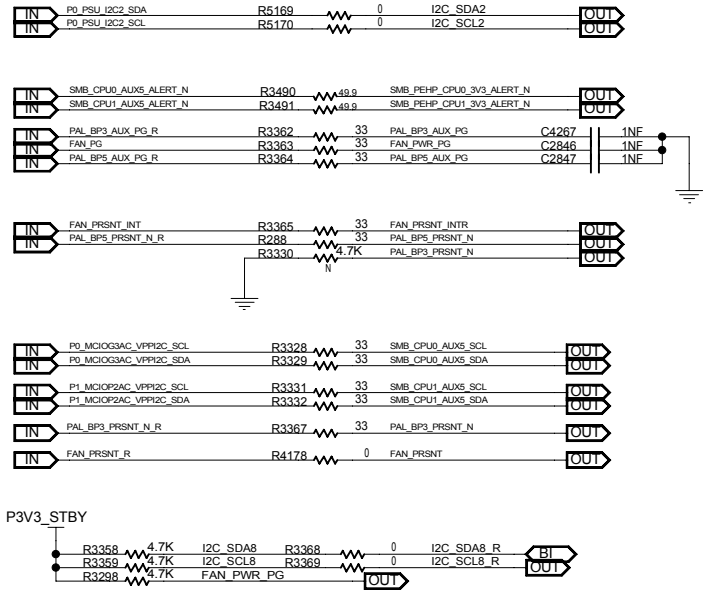

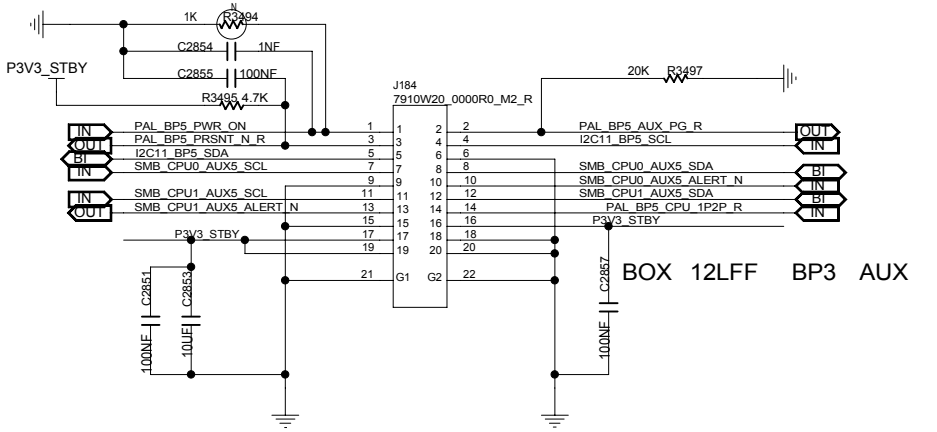

MODULE=---

FUNCTION=---

CNIT TECHNOLOGIES CO.,LTD.				
BOARD NAME BM-H14DSP_VERA			DRAWINGNO CNIT0302K1D0DL	
DESIGNED	ZHUHUI 00746	DATE 2024/10/22	SHEET 250 OF 276	REV
REVIEWED	GUBIN 00260	DATE 2024/11/22	Mon Jan 06 11:16:06 2025	

THIS DOCUMENT AND THE TECHNICAL DATA DISCLOSED ARE PROPRIETARY TO CNIT TECHNOLOGIES CO., LTD. AND SHALL NOT BE DUPLICATED USED RELEASED OR DISCLOSED WITHOUT EXPRESSING WRITTEN PERMISSION.

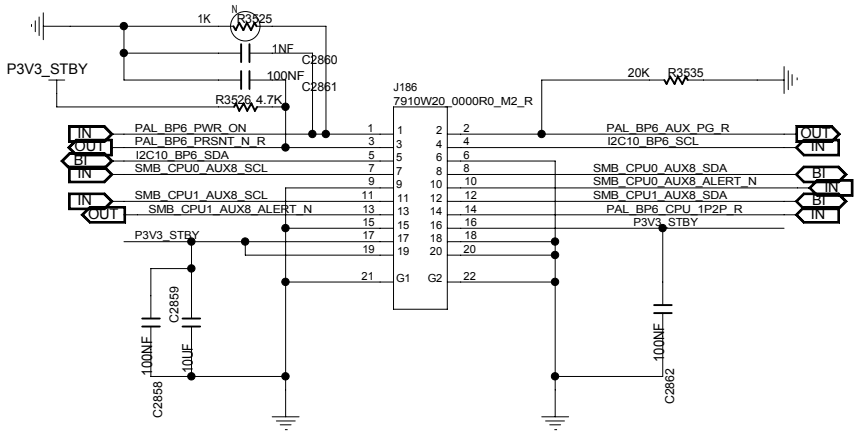

RESERVE AUX6

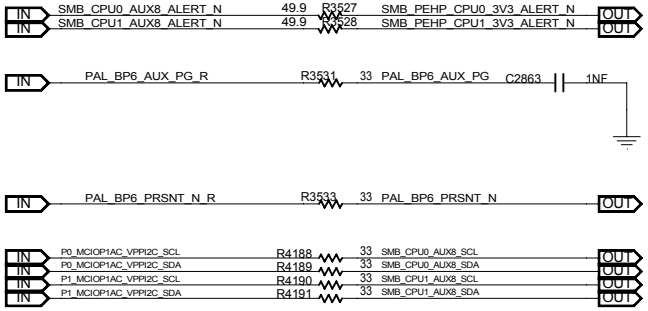

MODULE=---

FUNCTION=---

CNIT TECHNOLOGIES CO.,LTD.				
BOARD NAME BM-H14DSP_VERA			DRAWINGNO CNIT0302K1D0DL	
DESIGNED	ZHUHUI 00746	DATE 2024/10/22	SHEET 251 OF 276	REV
REVIEWED	GUBIN 00260	DATE 2024/11/22	Mon Jan 06 11:07:22 2025	

THIS DOCUMENT AND THE TECHNICAL DATA DISCLOSED ARE PROPRIETARY TO CNIT TECHNOLOGIES CO., LTD. AND SHALL NOT BE DUPLICATED USED RELEASED OR DISCLOSED WITHOUT EXPRESSING WRITTEN PERMISSION.

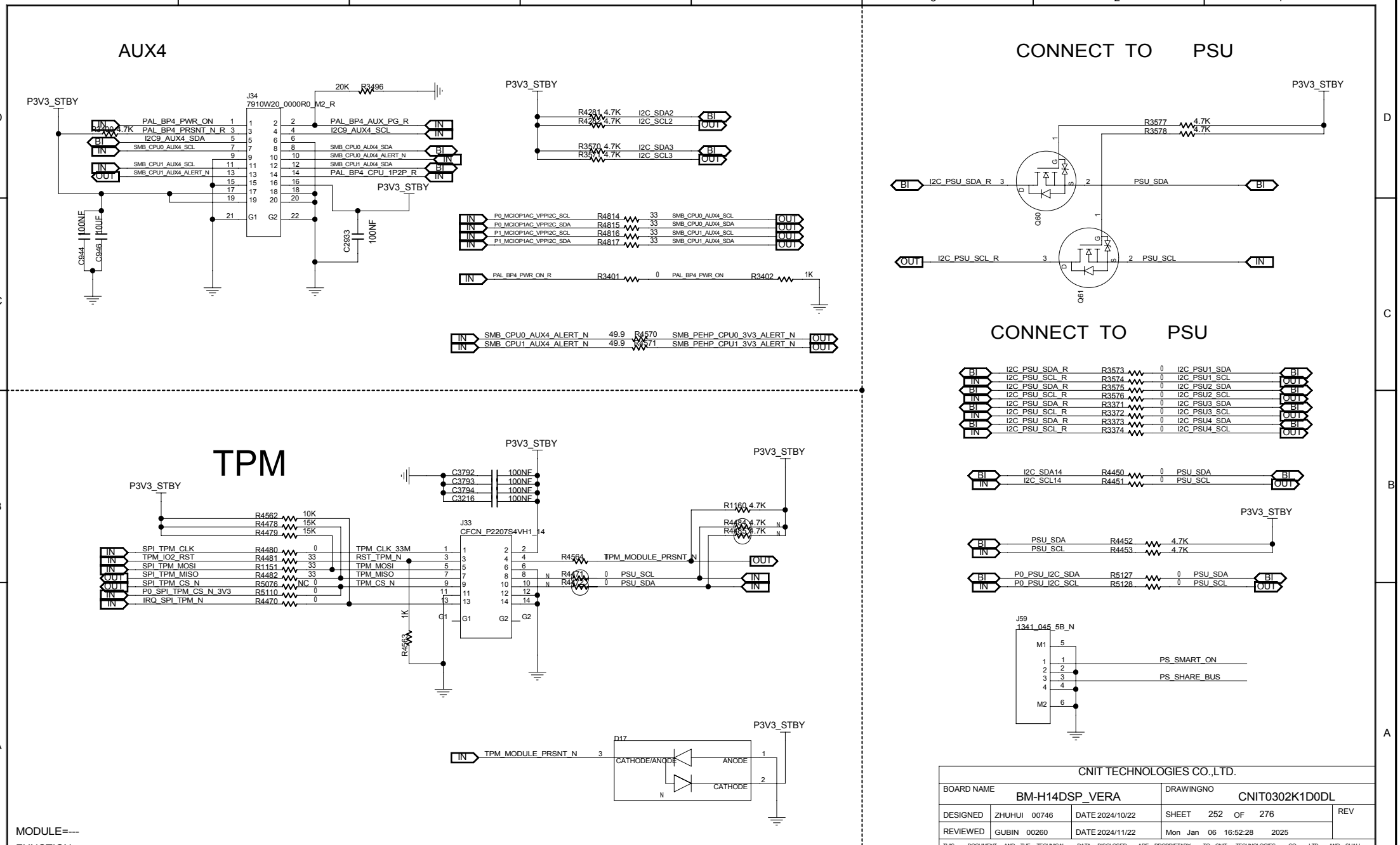

CNIT TECHNOLOGIES CO.,LTD.				
BOARD NAME BM-H14DSP_VERA			DRAWINGNO CNIT0302K1D0DL	
DESIGNED	ZHUHUI 00746	DATE 2024/10/22	SHEET 252 OF 276	REV
REVIEWED	GUBIN 00260	DATE 2024/11/22	Mon Jan 06 16:52:28 2025	

THIS DOCUMENT AND THE TECHNICAL DATA DISCLOSED ARE PROPRIETARY TO CNIT TECHNOLOGIES CO., LTD. AND SHALL NOT BE DUPLICATED USED RELEASED OR DISCLOSED WITHOUT EXPRESSING WRITTEN PERMISSION.

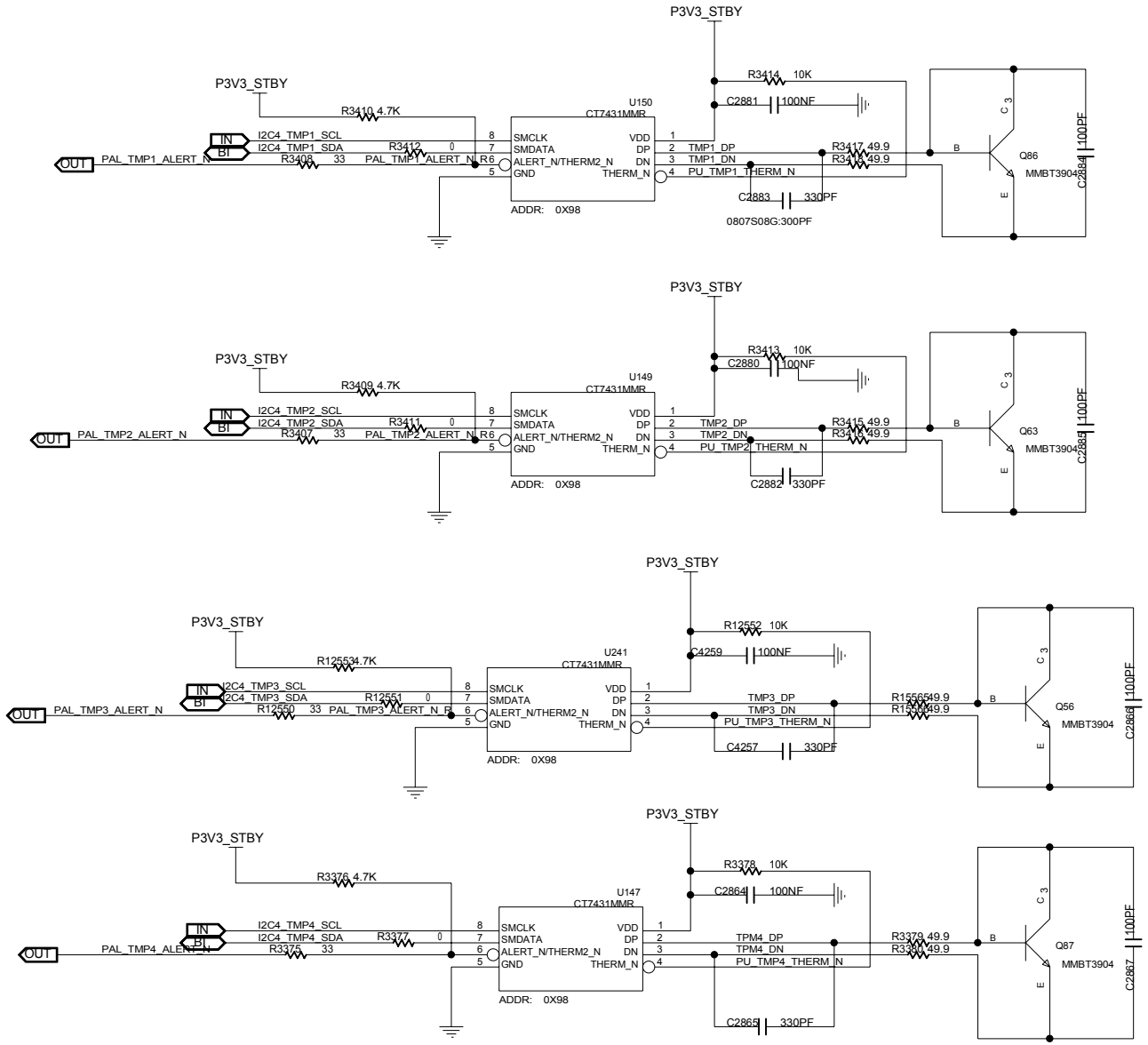

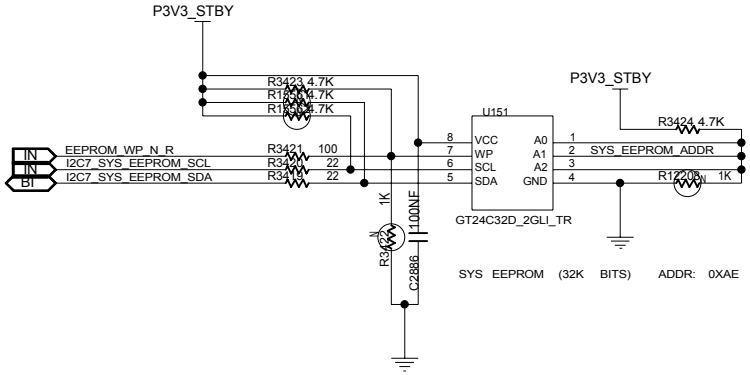

MODULE=---

FUNCTION=---

CNIT TECHNOLOGIES CO.,LTD.				
BOARD NAME BM-H14DSP_VERA			DRAWINGNO CNIT0302K1D0DL	
DESIGNED	ZHUHUI 00746	DATE 2024/10/22	SHEET 253 OF 276	REV
REVIEWED	GUBIN 00260	DATE 2024/11/22	Thu Jan 02 22:18:44 2025	

THIS DOCUMENT AND THE TECHNICAL DATA DISCLOSED ARE PROPRIETARY TO CNIT TECHNOLOGIES CO., LTD. AND SHALL NOT BE DUPLICATED USED RELEASED OR DISCLOSED WITHOUT EXPRESSING WRITTEN PERMISSION.

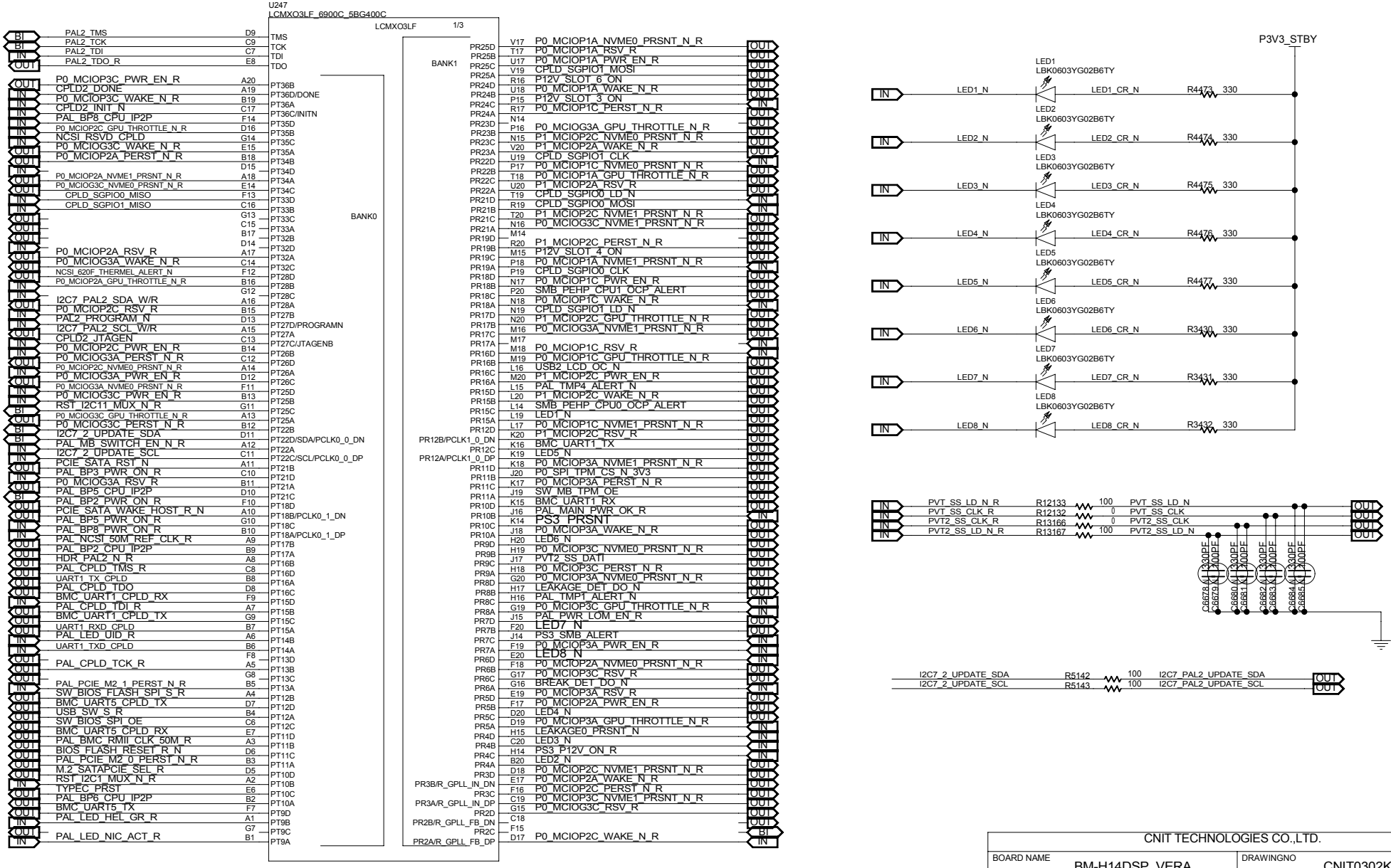

MODULE=---

FUNCTION=---

CNIT TECHNOLOGIES CO.,LTD.				
BOARD NAME BM-H14DSP_VERA			DRAWINGNO CNIT0302K1D0DL	
DESIGNED	ZHUHUI 00746	DATE 2024/10/22	SHEET 254 OF 276	REV
REVIEWED	GUBIN 00260	DATE 2024/11/22	Tue Jan 07 21:30:59 2025	

THIS DOCUMENT AND THE TECHNICAL DATA DISCLOSED ARE PROPRIETARY TO CNIT TECHNOLOGIES CO., LTD. AND SHALL NOT BE DUPLICATED USED RELEASED OR DISCLOSED WITHOUT EXPRESSING WRITTEN PERMISSION.

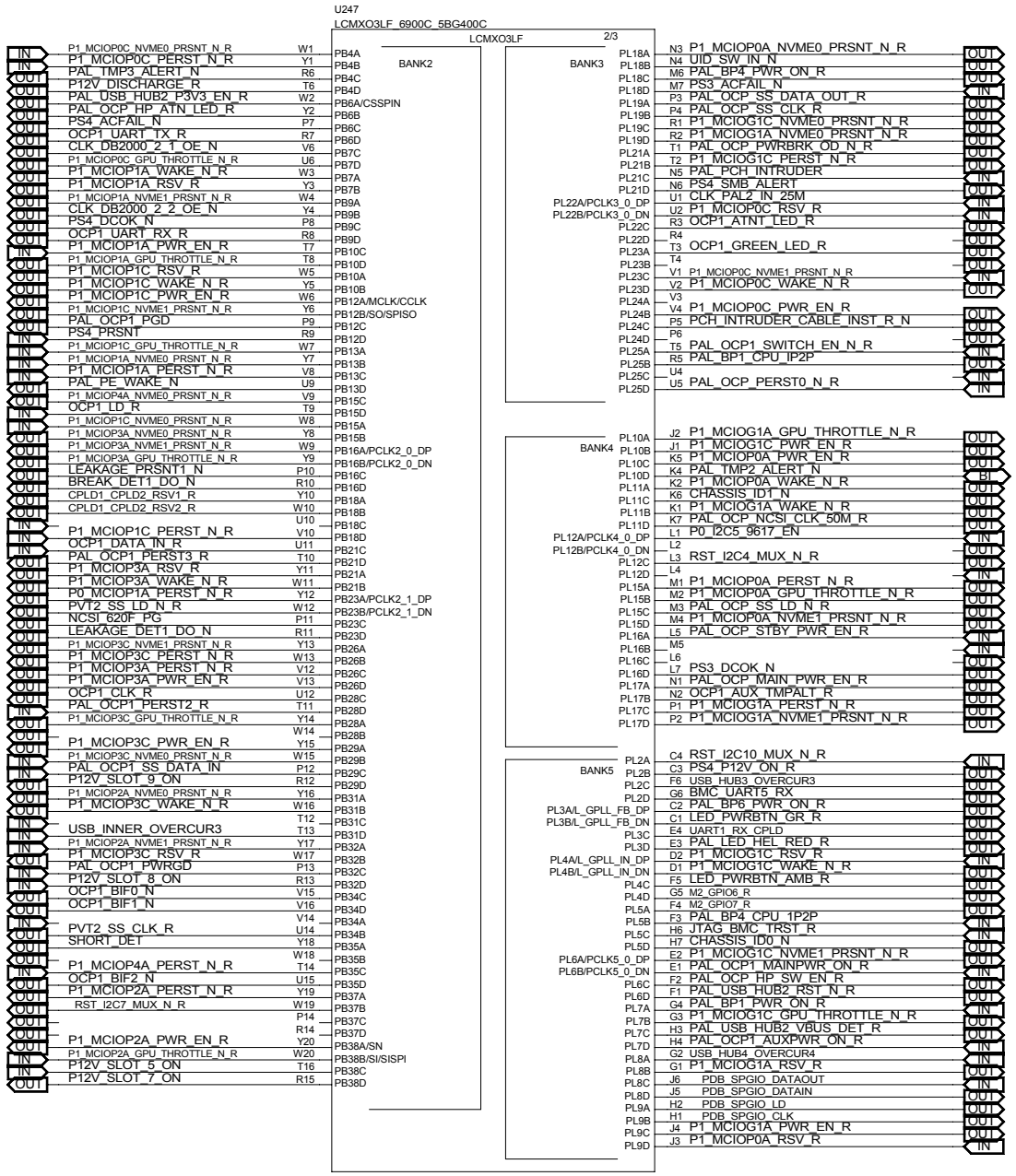

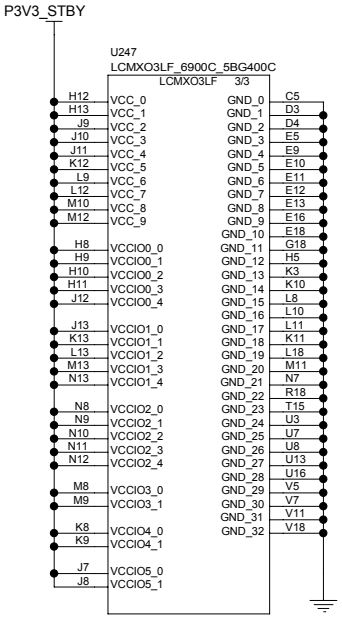

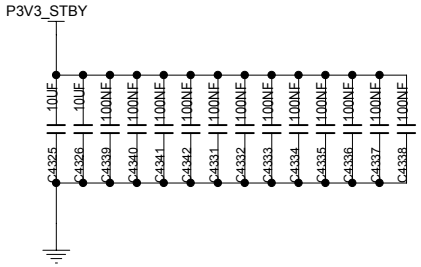

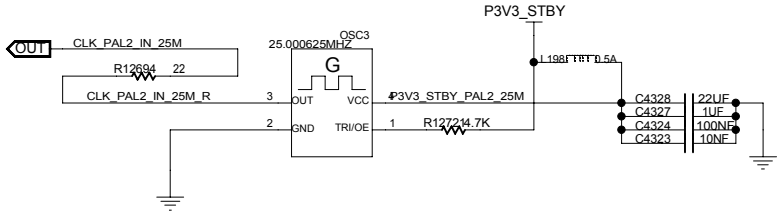

MODULE=---

FUNCTION=---

CNIT TECHNOLOGIES CO.,LTD.				
BOARD NAME BM-H14DSP_VERA			DRAWINGNO CNIT0302K1D0DL	
DESIGNED	ZHUHUI 00746	DATE 2024/10/22	SHEET 255 OF 276	REV
REVIEWED	GUBIN 00260	DATE 2024/11/22	Tue Jan 07 21:43:02 2025	

THIS DOCUMENT AND THE TECHNICAL DATA DISCLOSED ARE PROPRIETARY TO CNIT TECHNOLOGIES CO., LTD. AND SHALL NOT BE DUPLICATED USED RELEASED OR DISCLOSED WITHOUT EXPRESSING WRITTEN PERMISSION.

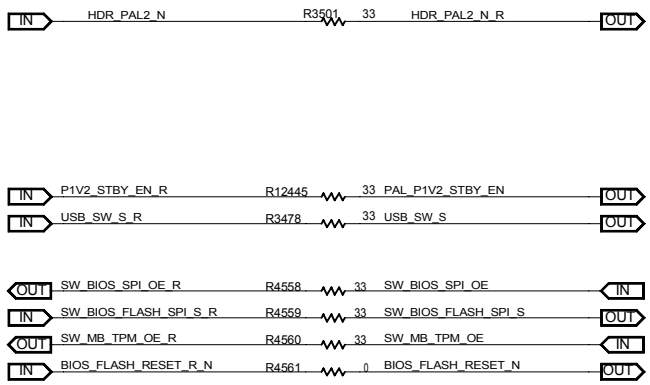

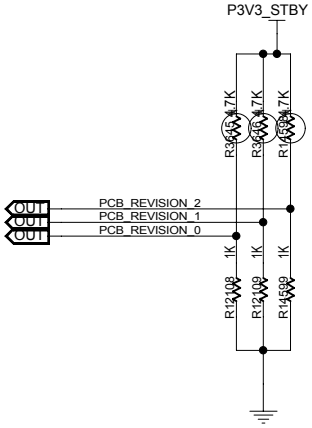

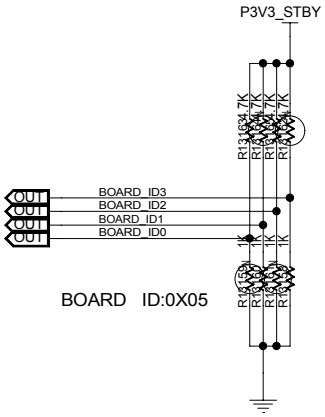

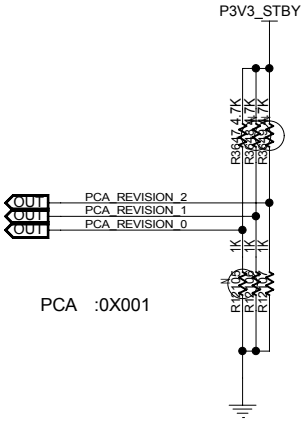

PCB_VER2	PCB_VER1	PCB_VER0	PCB_VER
0	0	0	A
0	0	1	B
0	1	0	C

MODULE=---

FUNCTION=---

CNIT TECHNOLOGIES CO.,LTD.				
BOARD NAME BM-H14DSP_VERA			DRAWINGNO CNIT0302K1D0DL	
DESIGNED	ZHUHUI 00746	DATE 2024/10/22	SHEET 256 OF 276	REV
REVIEWED	GUBIN 00260	DATE 2024/11/22	Mon Jan 06 16:03:01 2025	

THIS DOCUMENT AND THE TECHNICAL DATA DISCLOSED ARE PROPRIETARY TO CNIT TECHNOLOGIES CO., LTD. AND SHALL NOT BE DUPLICATED USED RELEASED OR DISCLOSED WITHOUT EXPRESSING WRITTEN PERMISSION.

SATA

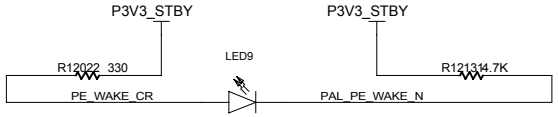

UPDATA MAIN CPLD JTAG

BI	PAL_CPLD_TMS_R	R12704	33	PAL_CPLD_TMS	BI
IN	PAL_CPLD_TDI_R	R12702	33	PAL_CPLD_TDI	OUT
BI	PAL_CPLD_TCK_R	R12703	33	PAL_CPLD_TCK	BI
OUT	PAL_CPLD_TDO	R13212	0	PAL_CPLD_TDO_R	IN

UPDATA PFR CPLD JTAG

OCP

IN	PAL_BMC_RMII_CLK_50M_R	R12023	22	PAL_BMC_50M_REF_CLK	OUT
IN	SMB_PEHP_CPU0_OCP_ALERT	R12066	33	SMB_PEHP_CPU0_3V3_ALERT_N	OUT
IN	SMB_PEHP_CPU1_OCP_ALERT	R12067	33	SMB_PEHP_CPU1_3V3_ALERT_N	OUT
IN					OUT
IN	PAL_OCP_PERST0_N_R	R12025	22	PAL_OCP1_RST_SW_N	OUT
IN	PAL_OCP_HP_ATN_LED_R	R13727	33	PAL_OCP1_HP_ATN_LED	OUT
IN	PAL_OCP_HP_SW_EN_R	R12092	33	PAL_OCP1_HP_SW_EN	OUT
IN	PAL_OCP_PWRBRK_OD_N_R	R13549	33	PAL_OCP1_PWRBRK_OD_SW_N	OUT
IN	PAL_OCP_SS_CLK_R	R13780	0	PAL_OCP1_SS_CLK_SW	OUT
IN	PAL_OCP_SS_LD_N_R	R13782	0	PAL_OCP1_SS_LD_SW_N	OUT
IN	PAL_OCP_SS_DATA_OUT_R	R13783	0	PAL_OCP1_SS_DATA_OUT_SW	OUT
IN	PAL_OCP_NCSI_CLK_50M_R	R12061	33	PAL_OCP1_NCSI_CLK_50M	OUT
IN	PAL_OCP1_SWITCH_EN_N_R	R13730	33	PAL_OCP1_SWITCH_EN_N	OUT
IN	PAL_OCP_MAIN_PWR_EN_R	R13731	33	PAL_OCP1_MAIN_PWR_EN_SW	OUT
IN	PAL_OCP_STBY_PWR_EN_R	R13732	33	PAL_OCP1_STBY_PWR_EN_SW	OUT
IN	PAL_OCP1_MAINPWR_ON_R	R3502	0	PAL_OCP1_MAINPWR_ON	OUT
IN	PAL_OCP1_AUXPWR_ON_R	R3503	0	PAL_OCP1_AUXPWR_ON	OUT
IN	OCP1_AUX_TMPALT_R	R3384	33	OCP1_AUX_TMPALT	OUT

PCH MISC

IN	I2C7_PAL2_SCL_L	R3615	100	I2C7_PAL2_SCL_W/R	OUT
IN	I2C7_PAL2_SDA_L	R3616	100	I2C7_PAL2_SDA_W/R	OUT
IN	PAL_BP8_CPU_IP2P	R3385	33	PAL_BP8_CPU_1P2P_R	OUT
IN	PAL_BP2_CPU_IP2P	R3504	33	PAL_BP2_CPU_1P2P_R	OUT
IN	PAL_BP1_CPU_IP2P	R3386	33	PAL_BP1_CPU_1P2P_R	OUT
IN	FAN_BOARD_RST	R3387	33	FAN_RST	OUT
IN	PAL_BP5_CPU_IP2P	R3388	33	PAL_BP5_CPU_1P2P_R	OUT
IN	PAL_BP6_CPU_IP2P	R3389	33	PAL_BP6_CPU_1P2P_R	OUT
IN	LED_PWRBTN_GR_R	R1841	0	LED_PWRBTN_GR	OUT
IN	PAL_LED_NIC_ACT_R	R4462	33	PAL_LED_NIC_ACT	OUT
IN	PAL_LED_HEL_GR_R	R4463	33	PAL_LED_HEL_GR	OUT
IN	PAL_LED_HEL_RED_R	R4464	33	PAL_LED_HEL_RED	OUT
IN	PAL_LED_UID_R	R4465	33	PAL_LED_UID	OUT
IN	LED_PWRBTN_AMB_R	R1842	0	LED_PWRBTN_AMB	OUT
IN	CLK_DB2000_2_1_OE_N	R4574	0	CLK_DB2000_2_1_OE_N_R	OUT
IN	CLK_DB2000_2_2_OE_N	R4575	0	CLK_DB2000_2_2_OE_N_R	OUT

IN	CPLD2_JTAGEN	R3518	33	CPLD2_JTAGEN_R	OUT
IN	P3V_BAT_SWITCH_EN_R	R15516	33	P3V_BAT_SWITCH_EN	OUT
IN	PAL_MB_SWITCH_EN_N_R	R14793	33	PAL_MB_SWITCH_EN_N	OUT
IN	PAL_NCSI_50M_REF_CLK_R	R14794	33	PAL_NCSI_50M_REF_CLK	OUT
IN	PAL_BP4_PRSNT_N_R	R3390	0	PAL_BP4_PRSNT_N	OUT
IN	PAL_BP4_AUX_PG_R	R3391	0	PAL_BP4_AUX_PG	OUT
OUT	PAL_BP4_CPU_1P2P_R	R3392	0	PAL_BP4_CPU_1P2P	IN
IN	M.2_SATAPCIE_SEL	R13812	0	M.2_SATAPCIE_SEL_R	OUT
OUT	PCIE_SATA_RST_R_N	R4147	33	PCIE_SATA_RST_N	IN
IN	PCIE_SATA_WAKE_R_N	R4148	33	PCIE_SATA_WAKE_HOST_R_N	OUT

CPLD_SGPIO

IN	CPLD_SGPIO0_CLK_R	R12728	33	CPLD_SGPIO0_CLK	OUT
IN	CPLD_SGPIO0_MOSI_R	R12730	33	CPLD_SGPIO0_MOSI	OUT
IN	CPLD_SGPIO0_LD_N_R	R12729	33	CPLD_SGPIO0_LD_N	OUT
IN	CPLD_SGPIO0_MISO_R	R5192	33	CPLD_SGPIO0_MISO	OUT
IN	CPLD_SGPIO1_CLK_R	R4149	33	CPLD_SGPIO1_CLK	OUT
IN	CPLD_SGPIO1_MOSI_R	R4150	33	CPLD_SGPIO1_MOSI	OUT
IN	CPLD_SGPIO1_LD_N_R	R4151	33	CPLD_SGPIO1_LD_N	OUT
IN	CPLD_SGPIO1_MISO_R	R5193	33	CPLD_SGPIO1_MISO	OUT
IN	PDB_SPGIO_DATAOUT_R	R5147	33	PDB_SPGIO_DATAOUT	OUT
IN	PDB_SPGIO_DATAIN_R	R5148	33	PDB_SPGIO_DATAIN	OUT
IN	PDB_SPGIO_LD_R	R5149	33	PDB_SPGIO_LD	OUT
IN	PDB_SPGIO_CLK_R	R5150	33	PDB_SPGIO_CLK	OUT

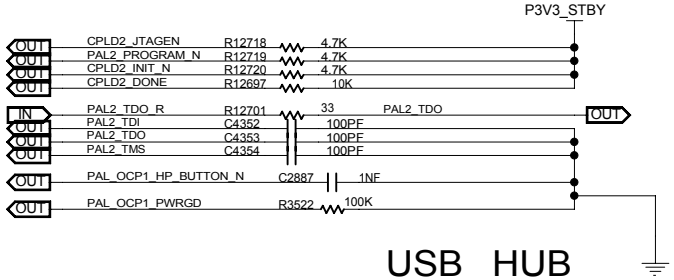

USB HUB

OUT	PAL_USB_HUB2_VBUS_DET_R	R4047	33	PAL_USB_HUB2_VBUS_DET	IN
IN	PAL_USB_HUB2_RST_N_R	R4048	33	PAL_USB_HUB2_RST_N	OUT
IN	PAL_USB_HUB2_P3V3_EN_R	R4049	33	PAL_USB_HUB2_P3V3_EN	OUT
IN	PAL_PCIE_M2_0_PERST_N_R	R322	33	PAL_M2_0_PERST_N	OUT
IN	PAL_PCIE_M2_1_PERST_N_R	R5151	33	PAL_M2_1_PERST_N	OUT
IN	RST_I2C7_MUX_N_R	R5133	33	RST_I2C7_MUX_N	OUT
IN	RST_I2C4_MUX_N_R	R12216	33	RST_I2C4_MUX_N	OUT
IN	RST_I2C11_MUX_N_R	R12217	33	RST_I2C11_MUX_N	OUT
IN	RST_I2C1_MUX_N_R	R12691	33	RST_I2C1_MUX_N	OUT
IN	RST_I2C10_MUX_N_R	R12055	33	RST_I2C10_MUX_N	OUT
BI	FAN_PWR_EN	R14505	33	FAN_EN	BI
BI	PAL_BP1_PWR_ON_R	R3537	33	PAL_BP1_PWR_ON	BI
BI	PAL_BP5_PWR_ON_R	R14513	33	PAL_BP5_PWR_ON	BI
BI	PAL_BP3_PWR_ON_R	R3538	33	PAL_BP3_PWR_ON	BI
BI	PAL_BP2_PWR_ON_R	R3540	33	PAL_BP2_PWR_ON	BI
BI	PAL_BP6_PWR_ON_R	R3539	33	PAL_BP6_PWR_ON	BI
BI	PAL_BP8_PWR_ON_R	R3545	33	PAL_BP8_PWR_ON	BI

MODULE=---

FUNCTION=---

CNIT TECHNOLOGIES CO.,LTD.				
BOARD NAME BM-H14DSP_VERA			DRAWINGNO CNIT0302K1D0DL	
DESIGNED	ZHUHUI 00746	DATE 2024/10/22	SHEET 257 OF 276	REV
REVIEWED	GUBIN 00260	DATE 2024/11/22	Sat Jan 04 16:49:02 2025	

THIS DOCUMENT AND THE TECHNICAL DATA DISCLOSED ARE PROPRIETARY TO CNIT TECHNOLOGIES CO., LTD. AND SHALL NOT BE DUPLICATED USED RELEASED OR DISCLOSED WITHOUT EXPRESSING WRITTEN PERMISSION.

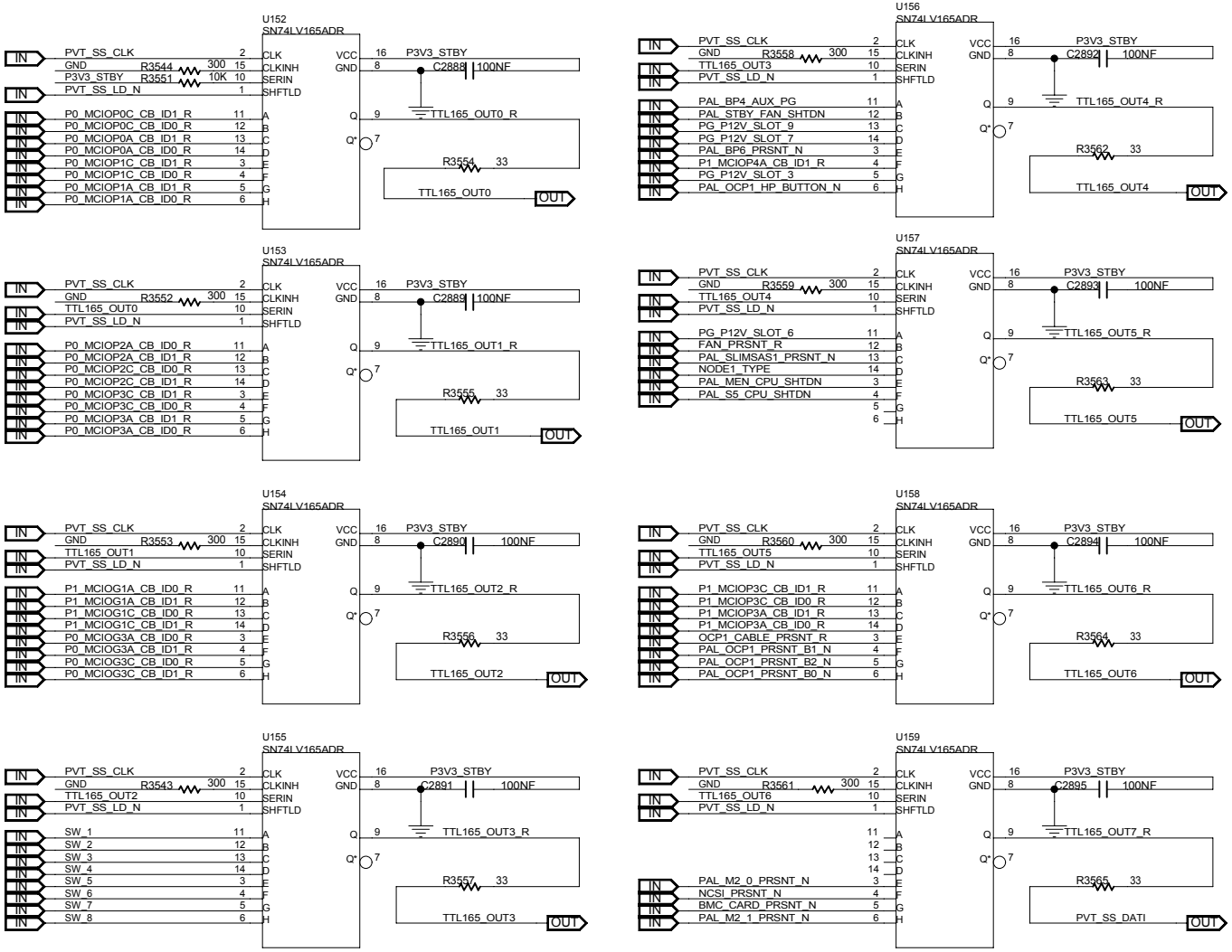

MODULE=---

FUNCTION=---

CNIT TECHNOLOGIES CO.,LTD.				
BOARD NAME BM-H14DSP_VERA			DRAWINGNO CNIT0302K1D0DL	
DESIGNED	ZHUHUI 00746	DATE 2024/10/22	SHEET 258 OF 276	REV
REVIEWED	GUBIN 00260	DATE 2024/11/22	Tue Jan 07 16:11:15 2025	

THIS DOCUMENT AND THE TECHNICAL DATA DISCLOSED ARE PROPRIETARY TO CNIT TECHNOLOGIES CO., LTD. AND SHALL NOT BE DUPLICATED USED RELEASED OR DISCLOSED WITHOUT EXPRESSING WRITTEN PERMISSION.

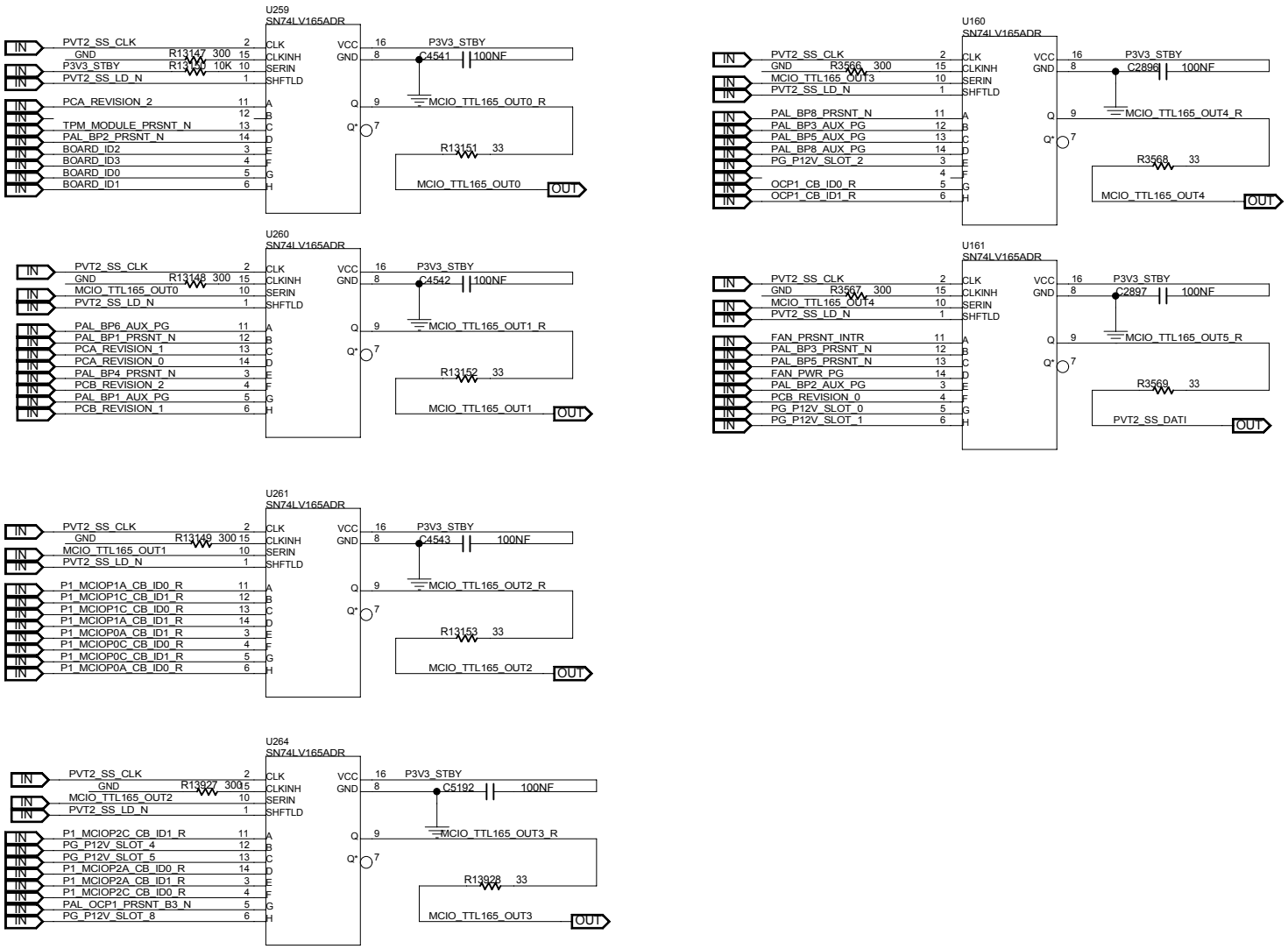

MODULE=---

FUNCTION=---

CNIT TECHNOLOGIES CO.,LTD.				
BOARD NAME BM-H14DSP_VERA			DRAWINGNO CNIT0302K1D0DL	
DESIGNED	ZHUHUI 00746	DATE 2024/10/22	SHEET 259 OF 276	REV
REVIEWED	GUBIN 00260	DATE 2024/11/22	Fri Dec 27 16:55:39 2024	

THIS DOCUMENT AND THE TECHNICAL DATA DISCLOSED ARE PROPRIETARY TO CNIT TECHNOLOGIES CO., LTD. AND SHALL NOT BE DUPLICATED USED RELEASED OR DISCLOSED WITHOUT EXPRESSING WRITTEN PERMISSION.

SLAVE CPLD JTAG

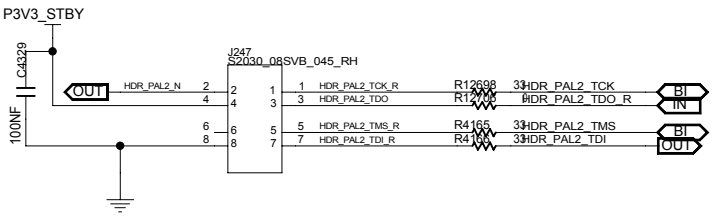

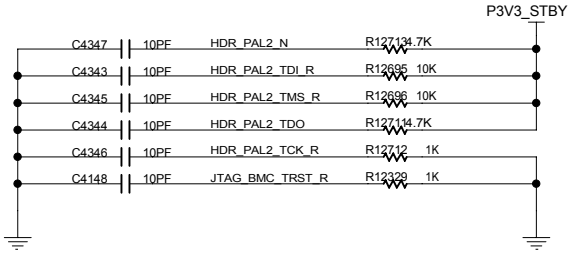

TO SLAVE CPLD

FROM BMC JTAG AND JTAG HD

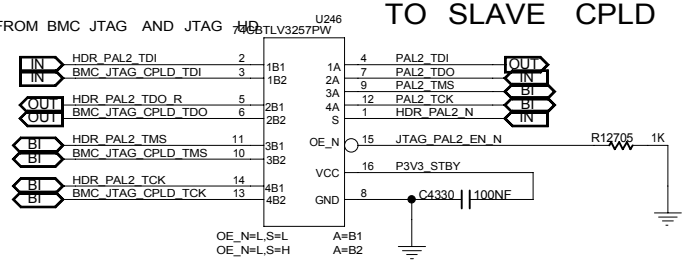

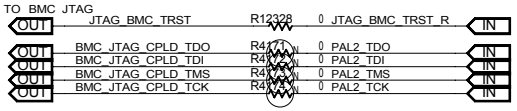

MAIN CPLD JTAG

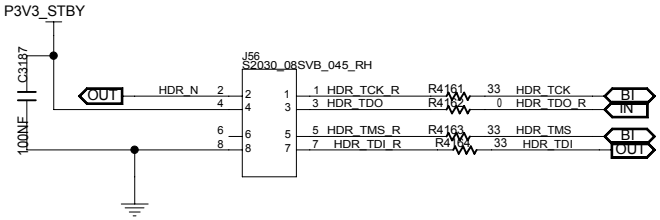

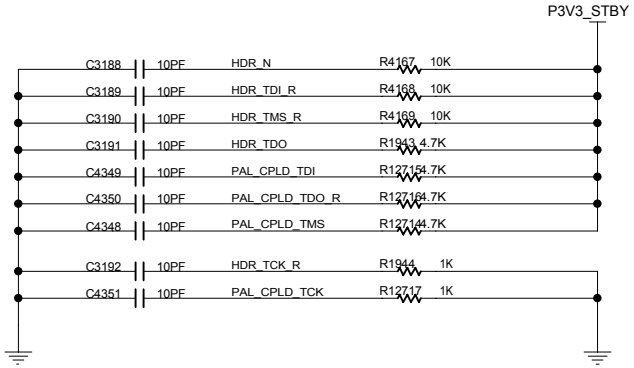

TO MAIN CPLD

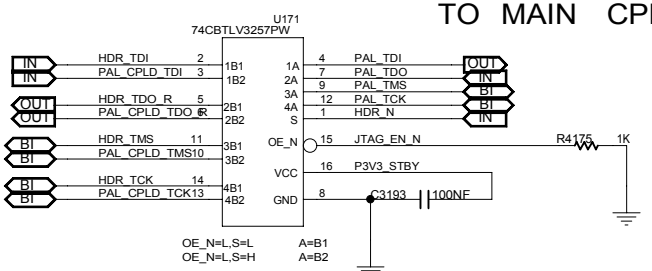

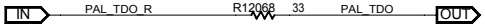

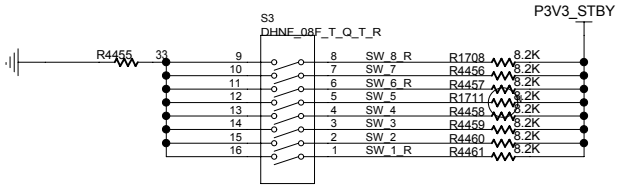

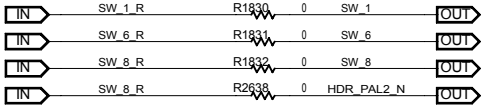

MODULE=---

FUNCTION=---

CNIT TECHNOLOGIES CO.,LTD.				
BOARD NAME BM-H14DSP_VERA			DRAWINGNO CNIT0302K1D0DL	
DESIGNED	ZHUHUI 00746	DATE 2024/10/22	SHEET 260 OF 276	REV
REVIEWED	GUBIN 00260	DATE 2024/11/22	Fri Dec 27 16:50:45 2024	

THIS DOCUMENT AND THE TECHNICAL DATA DISCLOSED ARE PROPRIETARY TO CNIT TECHNOLOGIES CO., LTD. AND SHALL NOT BE DUPLICATED USED RELEASED OR DISCLOSED WITHOUT EXPRESSING WRITTEN PERMISSION.

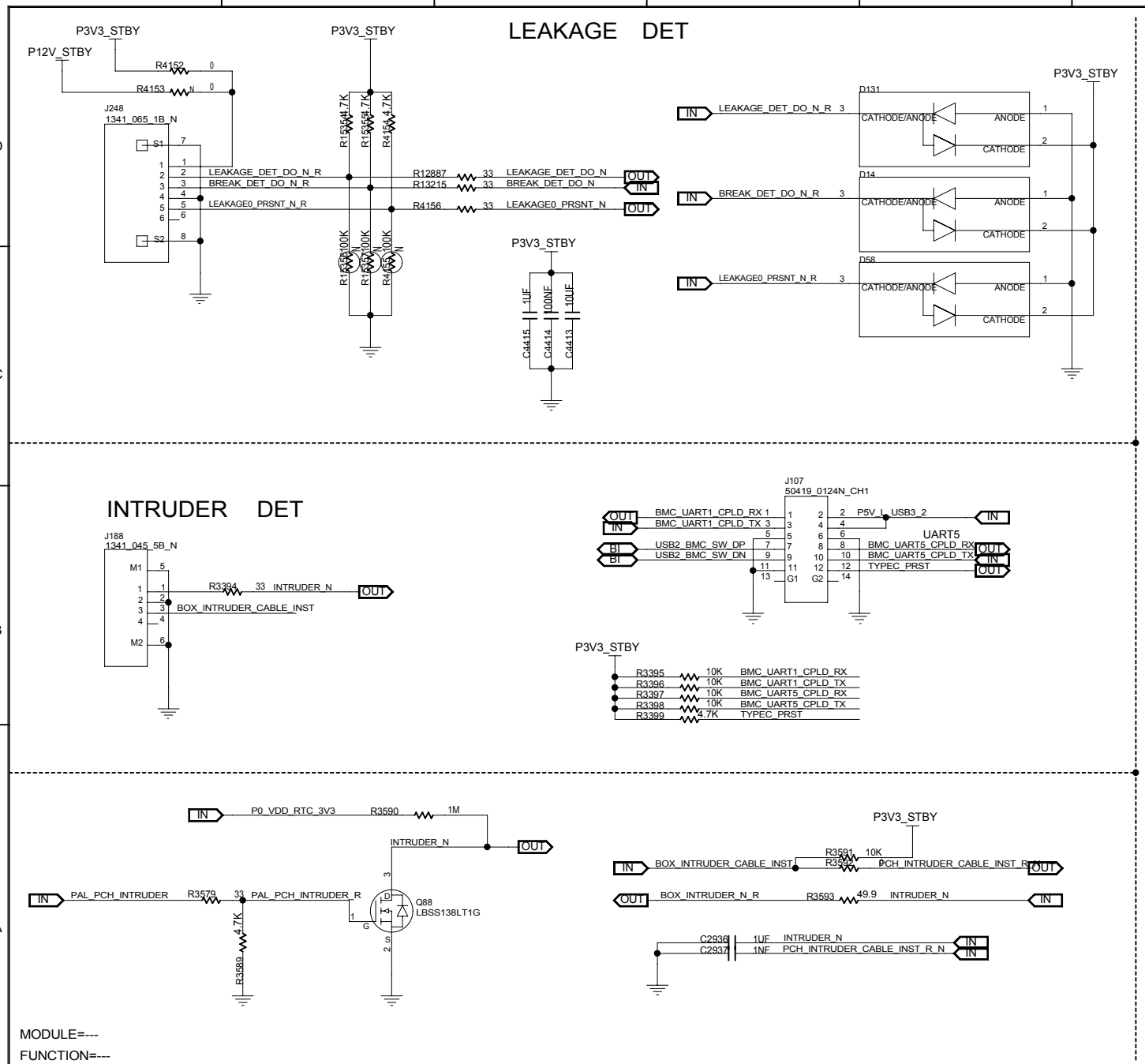

CNIT TECHNOLOGIES CO.,LTD.				
BOARD NAME BM-H14DSP_VERA			DRAWINGNO CNIT0302K1D0DL	
DESIGNED	ZHUHUI 00746	DATE 2024/10/22	SHEET 261 OF 276	REV
REVIEWED	GUBIN 00260	DATE 2024/11/22	Mon Jan 06 16:47:48 2025	

THIS DOCUMENT AND THE TECHNICAL DATA DISCLOSED ARE PROPRIETARY TO CNIT TECHNOLOGIES CO., LTD. AND SHALL NOT BE DUPLICATED USED RELEASED OR DISCLOSED WITHOUT EXPRESSING WRITTEN PERMISSION.

MODULE=---

FUNCTION=---

CNIT TECHNOLOGIES CO.,LTD.				
BOARD NAME BM-H14DSP_VERA			DRAWINGNO CNIT0302K1D0DL	
DESIGNED	ZHUHUI 00746	DATE 2024/10/22	SHEET 262 OF 276	REV
REVIEWED	GUBIN 00260	DATE 2024/11/22	Tue Jan 07 17:40:00 2025	

THIS DOCUMENT AND THE TECHNICAL DATA DISCLOSED ARE PROPRIETARY TO CNIT TECHNOLOGIES CO., LTD. AND SHALL NOT BE DUPLICATED USED RELEASED OR DISCLOSED WITHOUT EXPRESSING WRITTEN PERMISSION.

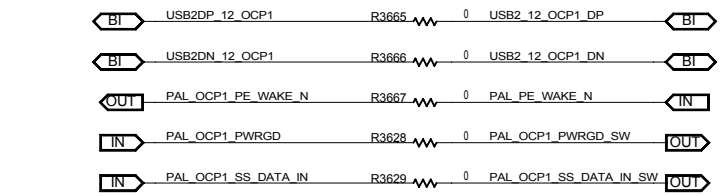

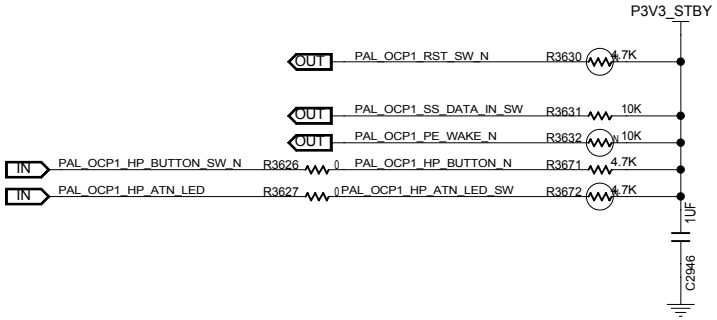

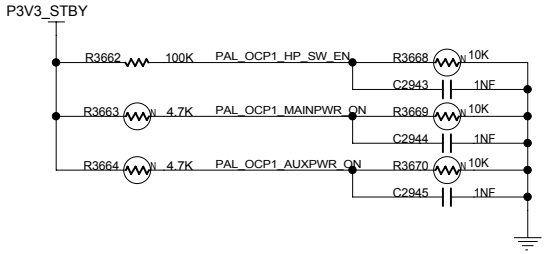

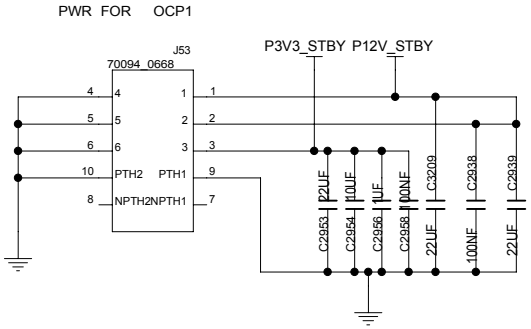

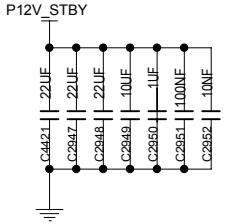

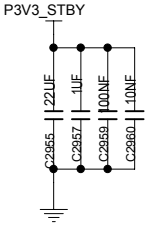

MODULE=---

FUNCTION=---

CNIT TECHNOLOGIES CO.,LTD.				
BOARD NAME BM-H14DSP_VERA			DRAWINGNO CNIT0302K1D0DL	
DESIGNED	ZHUHUI 00746	DATE 2024/10/22	SHEET 263 OF 276	REV
REVIEWED	GUBIN 00260	DATE 2024/11/22	Wed Jan 08 14:07:42 2025	

THIS DOCUMENT AND THE TECHNICAL DATA DISCLOSED ARE PROPRIETARY TO CNIT TECHNOLOGIES CO., LTD. AND SHALL NOT BE DUPLICATED USED RELEASED OR DISCLOSED WITHOUT EXPRESSING WRITTEN PERMISSION.

NCSI

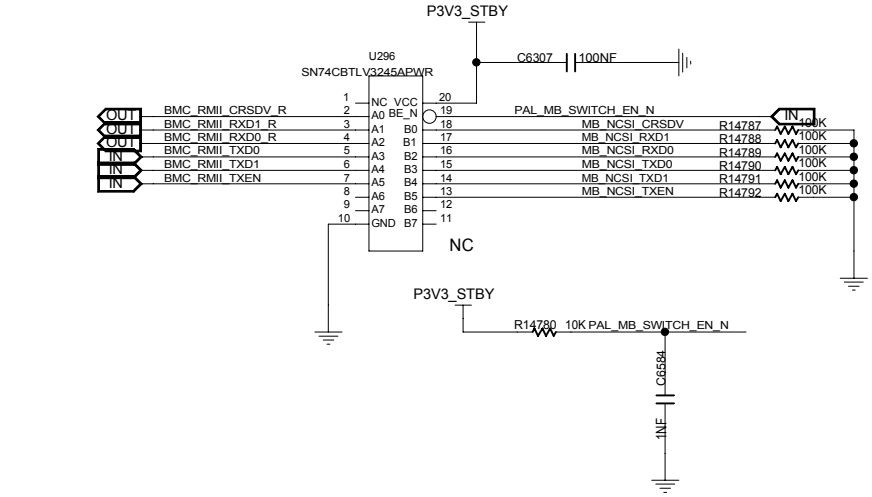

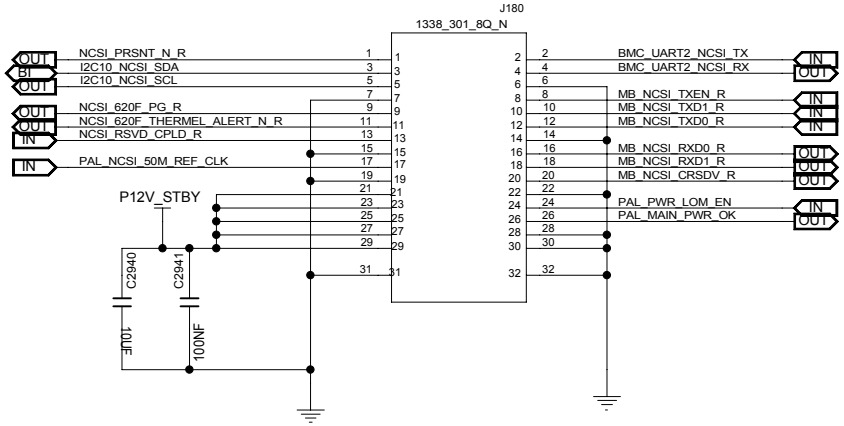

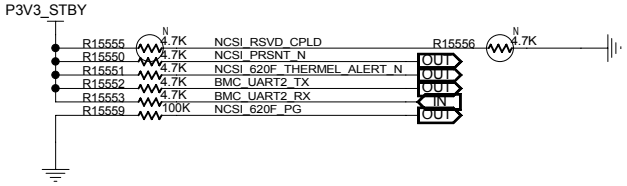

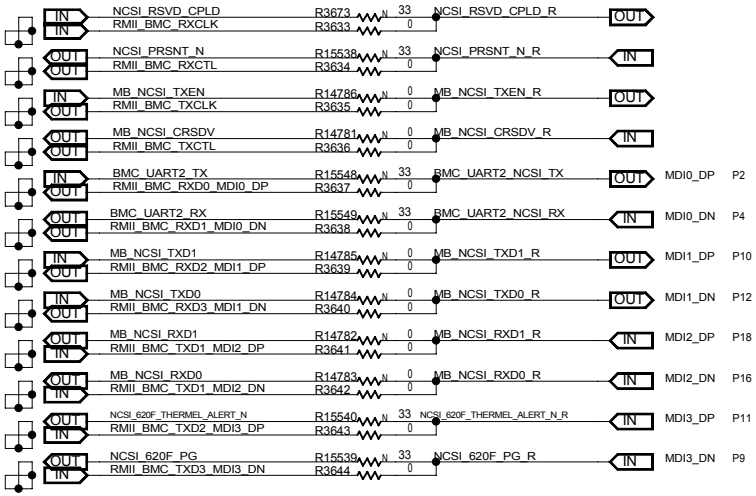

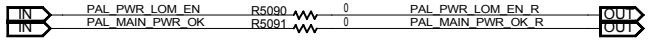

MODULE=---

FUNCTION=---

CNIT TECHNOLOGIES CO.,LTD.				
BOARD NAME BM-H14DSP_VERA			DRAWINGNO CNIT0302K1D0DL	
DESIGNED	ZHUHUI 00746	DATE 2024/10/22	SHEET 264 OF 276	REV
REVIEWED	GUBIN 00260	DATE 2024/11/22	Wed Jan 08 14:00:21 2025	

THIS DOCUMENT AND THE TECHNICAL DATA DISCLOSED ARE PROPRIETARY TO CNIT TECHNOLOGIES CO., LTD. AND SHALL NOT BE DUPLICATED USED RELEASED OR DISCLOSED WITHOUT EXPRESSING WRITTEN PERMISSION.

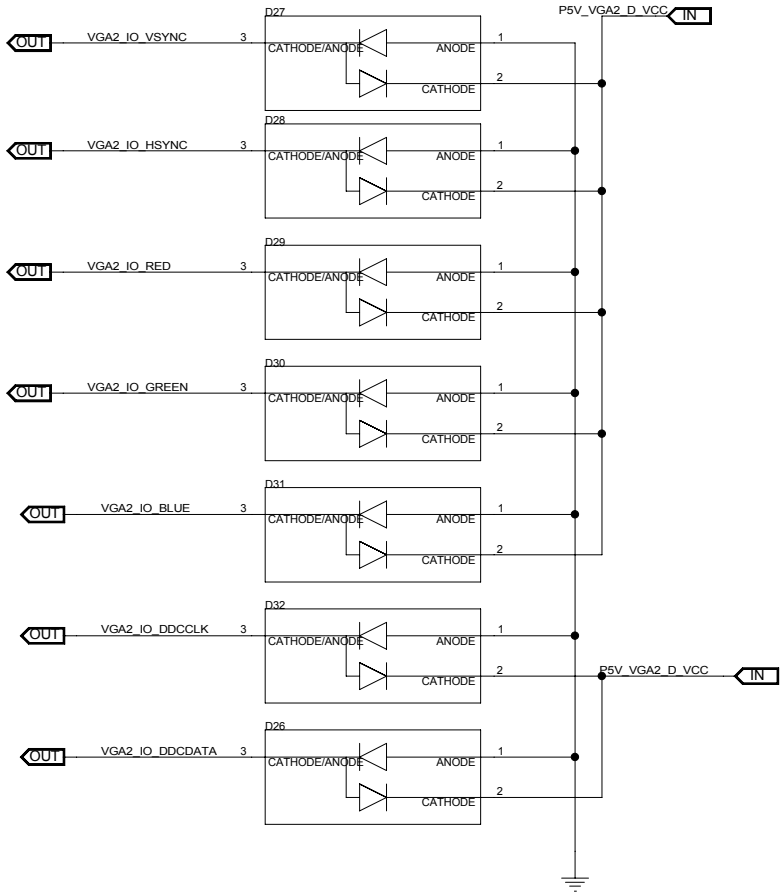

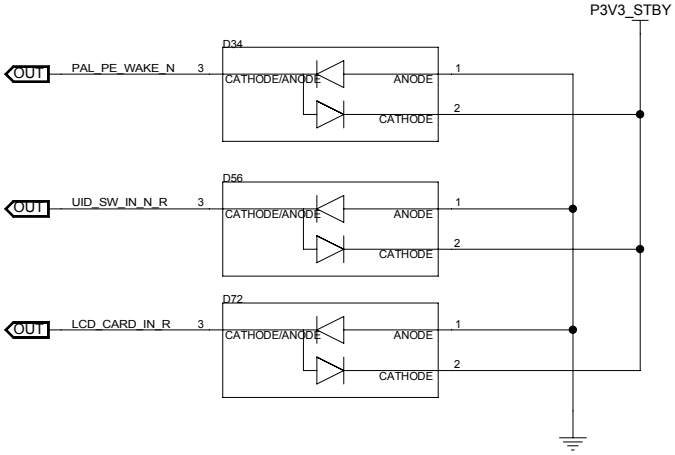

MODULE=---

FUNCTION=---

CNIT TECHNOLOGIES CO.,LTD.				
BOARD NAME BM-H14DSP_VERA			DRAWINGNO CNIT0302K1D0DL	
DESIGNED	ZHUHUI 00746	DATE 2024/10/22	SHEET 265 OF 276	REV
REVIEWED	GUBIN 00260	DATE 2024/11/22	Thu Jan 02 22:17:59 2025	

THIS DOCUMENT AND THE TECHNICAL DATA DISCLOSED ARE PROPRIETARY TO CNIT TECHNOLOGIES CO., LTD. AND SHALL NOT BE DUPLICATED USED RELEASED OR DISCLOSED WITHOUT EXPRESSING WRITTEN PERMISSION.

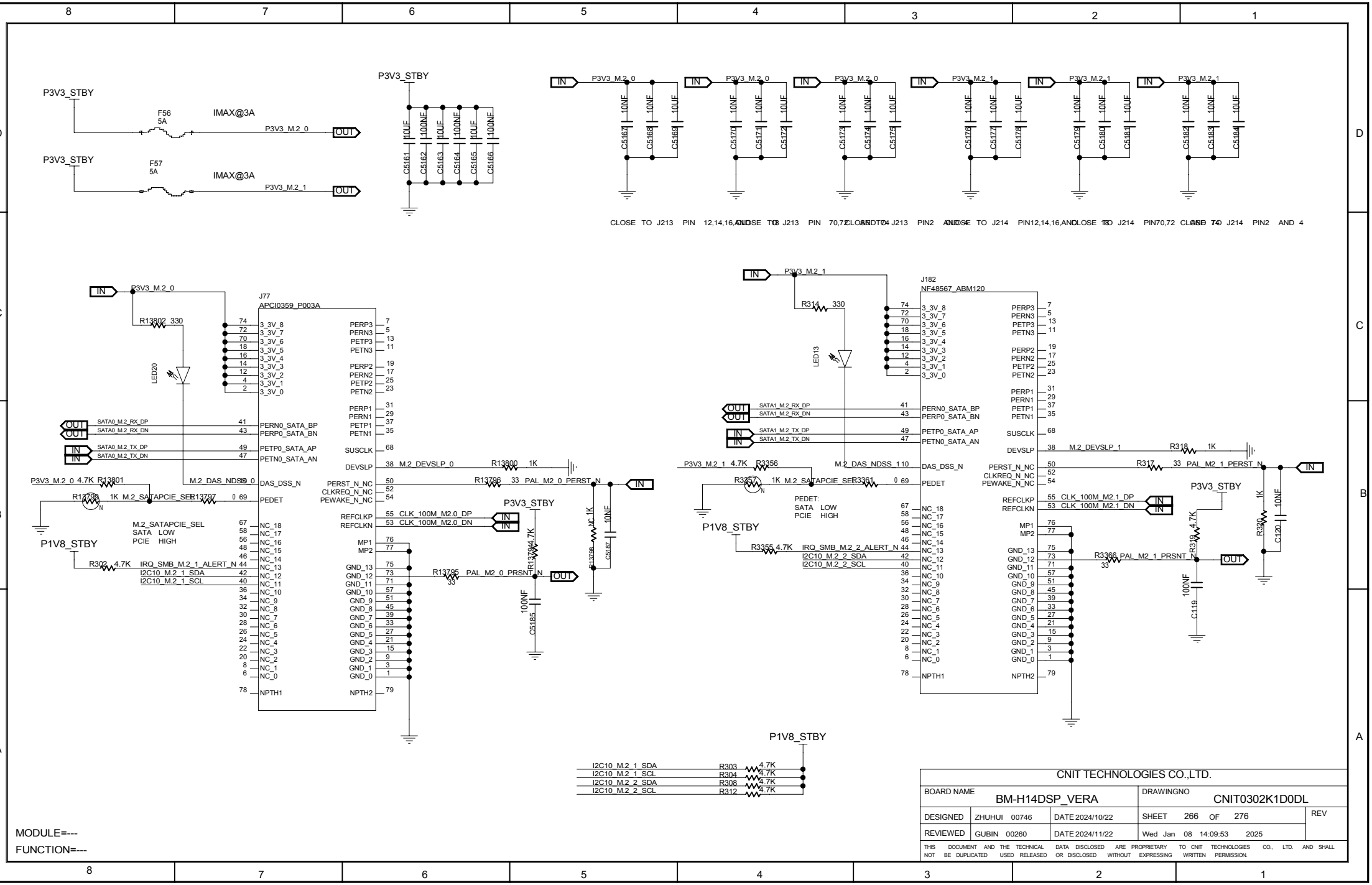

MODULE=---

FUNCTION=---

CNIT TECHNOLOGIES CO.,LTD.				
BOARD NAME BM-H14DSP_VERA			DRAWINGNO CNIT0302K1D0DL	
DESIGNED	ZHUHUI 00746	DATE 2024/10/22	SHEET 266 OF 276	REV
REVIEWED	GUBIN 00260	DATE 2024/11/22	Wed Jan 08 14:09:53 2025	

THIS DOCUMENT AND THE TECHNICAL DATA DISCLOSED ARE PROPRIETARY TO CNIT TECHNOLOGIES CO., LTD. AND SHALL NOT BE DUPLICATED USED RELEASED OR DISCLOSED WITHOUT EXPRESSING WRITTEN PERMISSION.

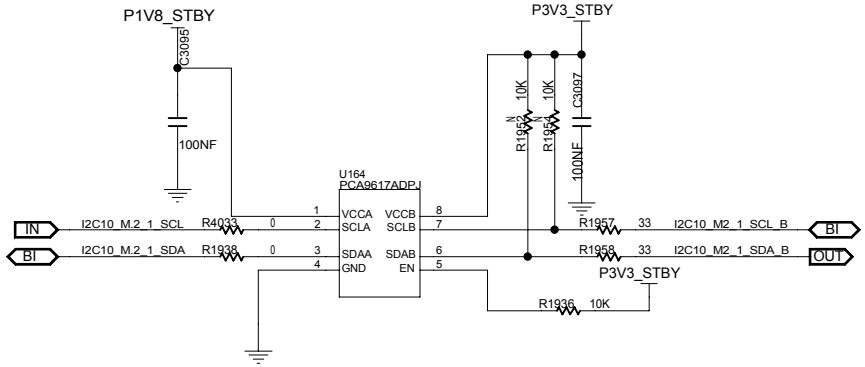

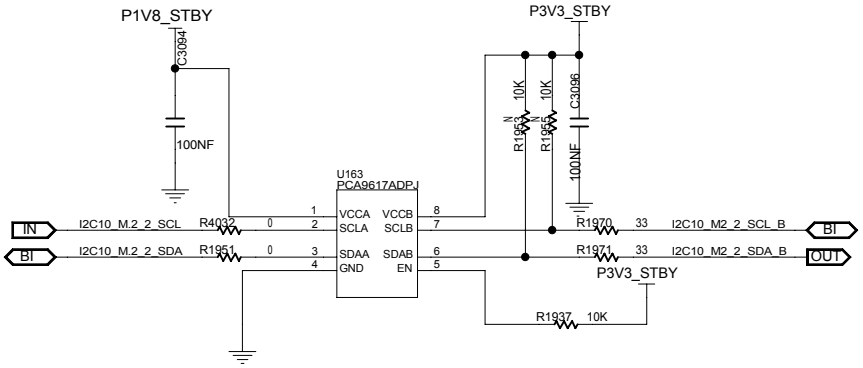

SHARE PAD

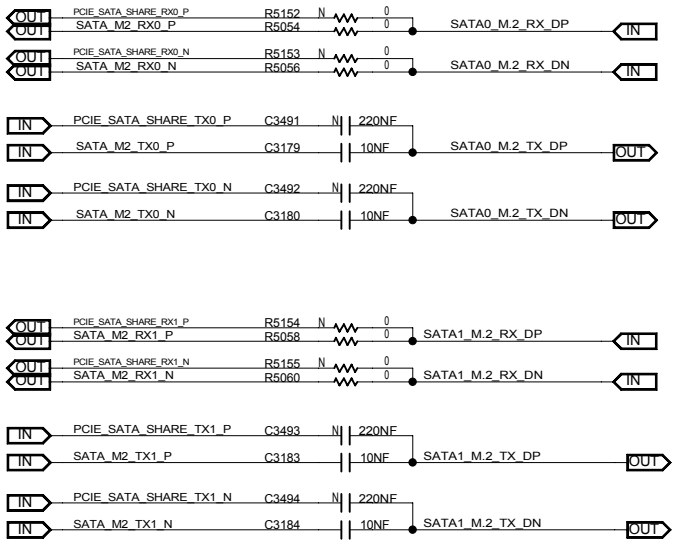

MODULE=---
FUNCTION=---

CNIT TECHNOLOGIES CO.,LTD.				
BOARD NAME BM-H14DSP_VERA			DRAWINGNO CNIT0302K1D0DL	
DESIGNED	ZHUHUI 00746	DATE 2024/10/22	SHEET 267 OF 276	REV
REVIEWED	GUBIN 00260	DATE 2024/11/22	Fri Jan 03 11:35:10 2025	

THIS DOCUMENT AND THE TECHNICAL DATA DISCLOSED ARE PROPRIETARY TO CNIT TECHNOLOGIES CO., LTD. AND SHALL NOT BE DUPLICATED USED RELEASED OR DISCLOSED WITHOUT EXPRESSING WRITTEN PERMISSION.

M.2_SATA_CONTROLLER

4314K03X

88SE9230A1

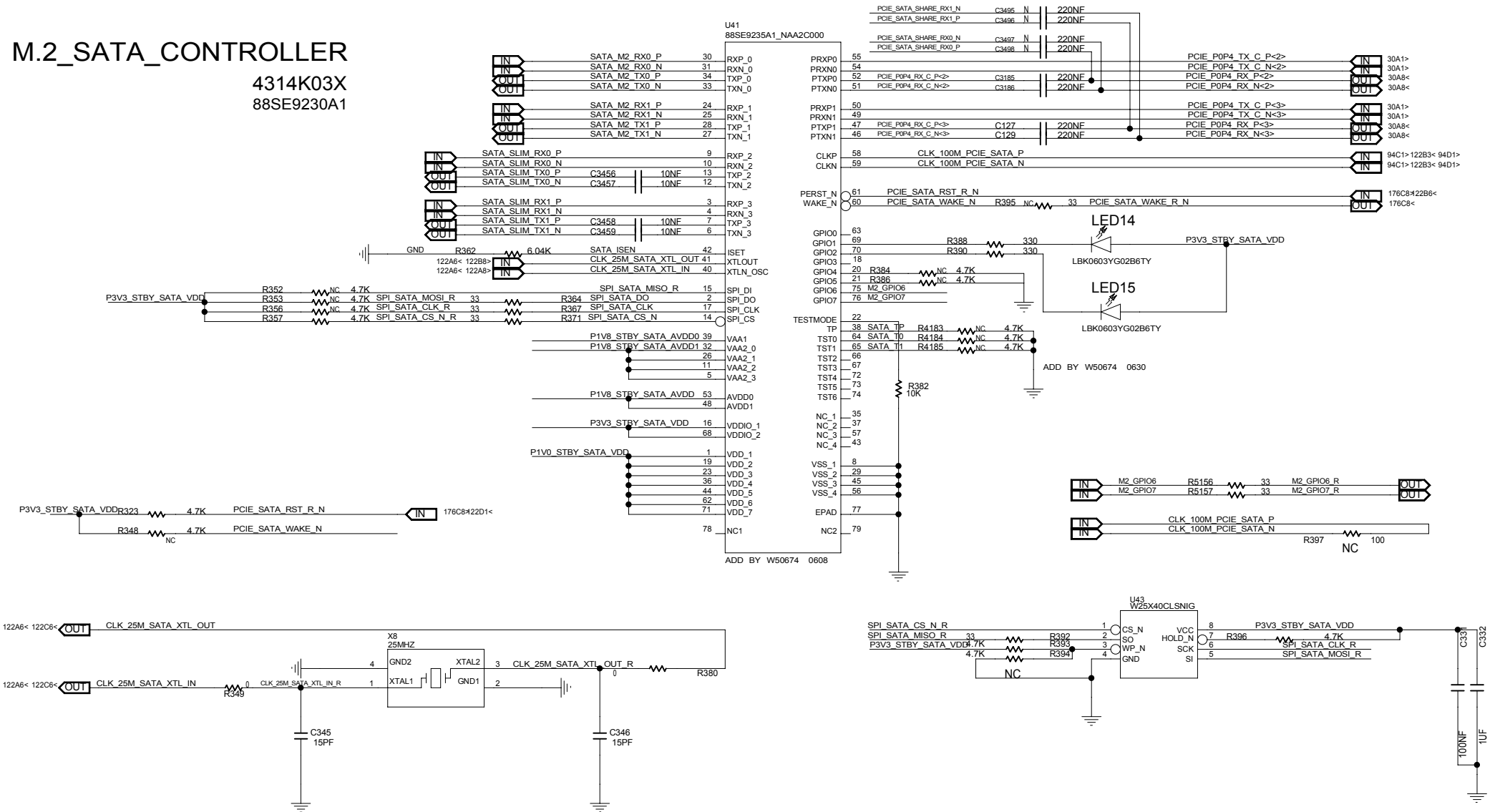

CNIT TECHNOLOGIES CO.,LTD.				
BOARD NAME BM-H14DSP_VERA			DRAWINGNO CNIT0302K1D0DL	
DESIGNED	ZHUHUI 00746	DATE 2024/10/22	SHEET 268 OF 276	REV
REVIEWED	GUBIN 00260	DATE 2024/11/22	Wed Jan 08 14:09:58 2025	

THIS DOCUMENT AND THE TECHNICAL DATA DISCLOSED ARE PROPRIETARY TO CNIT TECHNOLOGIES CO., LTD. AND SHALL NOT BE DUPLICATED USED RELEASED OR DISCLOSED WITHOUT EXPRESSING WRITTEN PERMISSION.

MODULE=---

FUNCTION=---

M.2_SATA_CONTROLLER_CAP

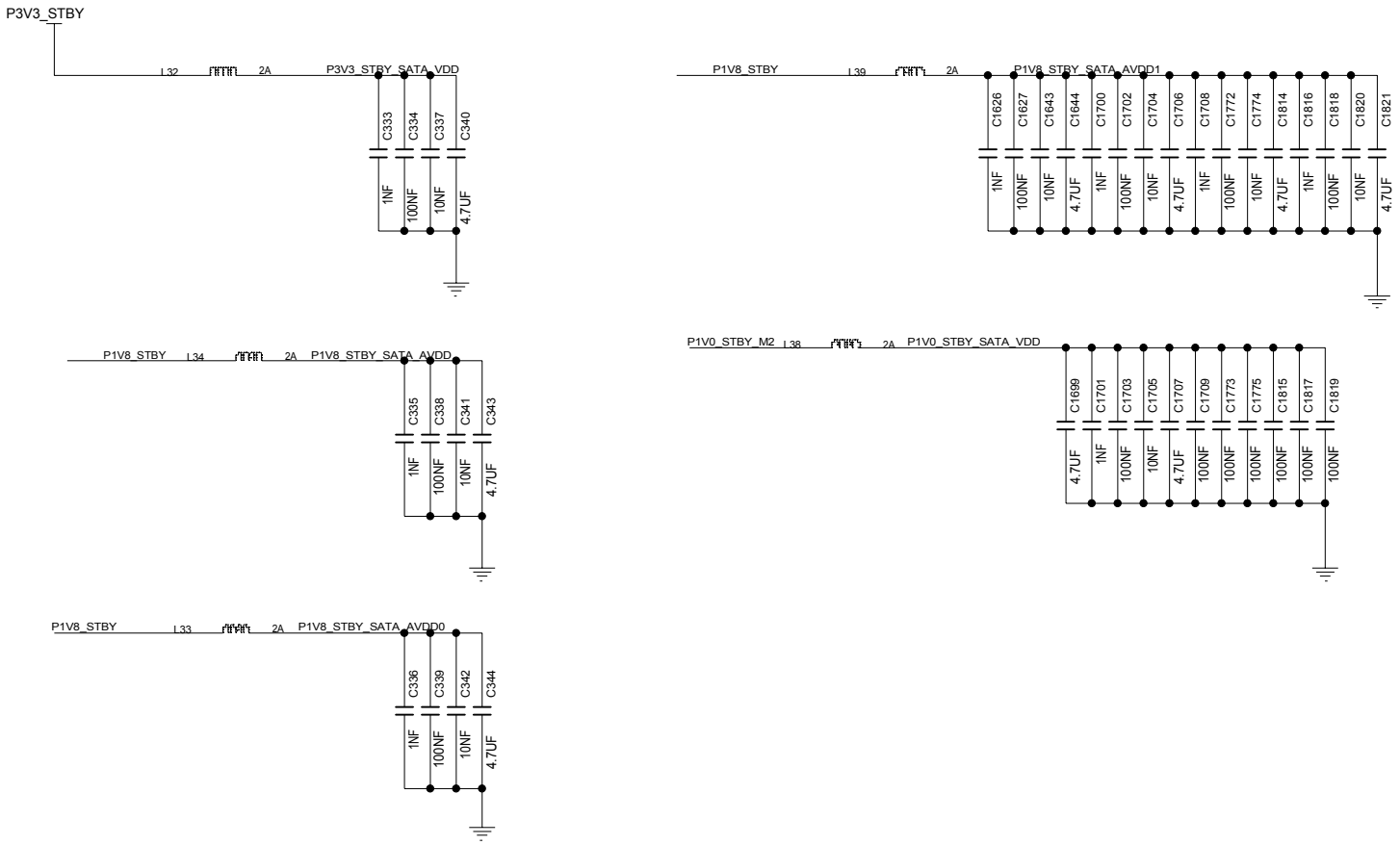

MODULE=---

FUNCTION=---

CNIT TECHNOLOGIES CO.,LTD.				
BOARD NAME BM-H14DSP_VERA			DRAWINGNO CNIT0302K1D0DL	
DESIGNED	ZHUHUI 00746	DATE 2024/10/22	SHEET 269 OF 276	REV
REVIEWED	GUBIN 00260	DATE 2024/11/22	Fri Dec 27 11:56:28 2024	

THIS DOCUMENT AND THE TECHNICAL DATA DISCLOSED ARE PROPRIETARY TO CNIT TECHNOLOGIES CO., LTD. AND SHALL NOT BE DUPLICATED USED RELEASED OR DISCLOSED WITHOUT EXPRESSING WRITTEN PERMISSION.

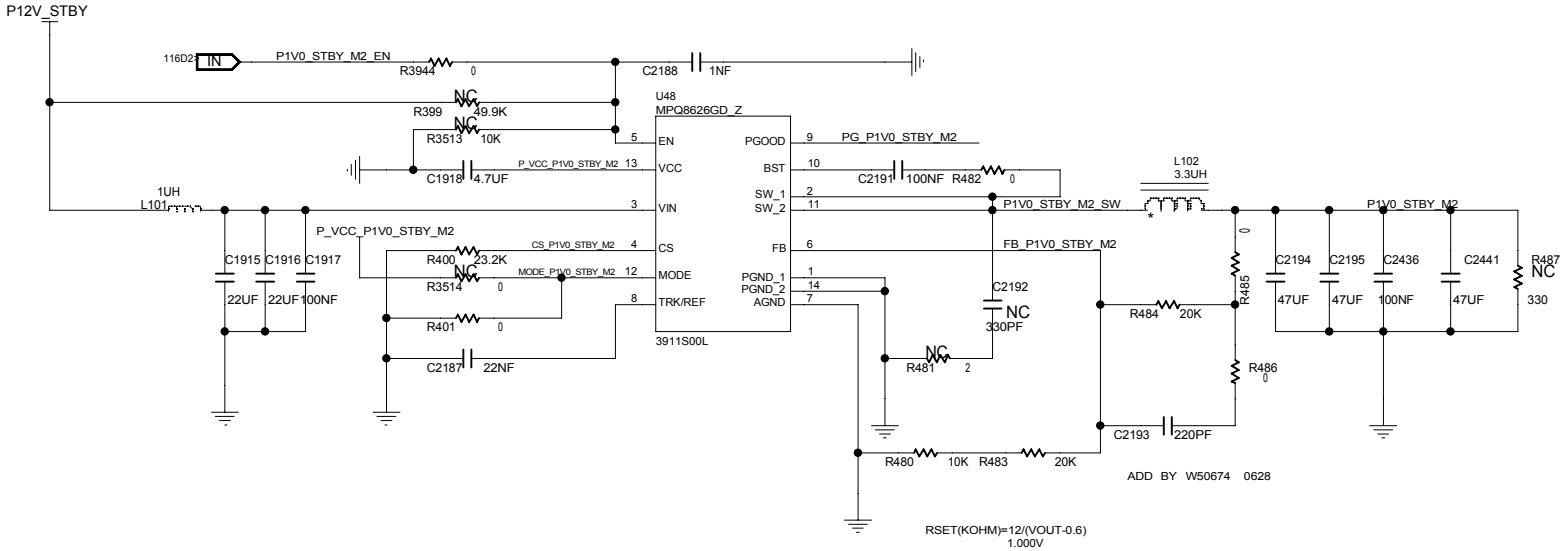

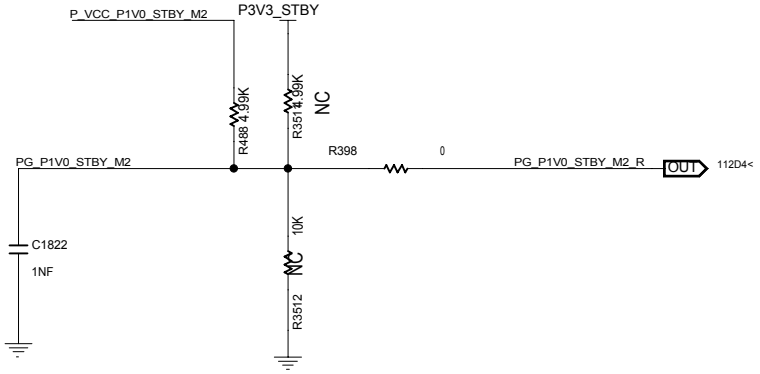

VOUT SPECIFICATIONS
VOUT = 1.0V
IOUT TDC = 1.2A
OCP = 2.1A
FSW = 1100KHZ
VFB = 0.6V
TSS = 2.2MS

MODULE=---
FUNCTION=---

CNIT TECHNOLOGIES CO.,LTD.				
BOARD NAME BM-H14DSP_VERA			DRAWINGNO CNIT0302K1D0DL	
DESIGNED	ZHUHUI 00746	DATE 2024/10/22	SHEET 270 OF 276	REV
REVIEWED	GUBIN 00260	DATE 2024/11/22	Fri Jan 03 11:35:17 2025	

THIS DOCUMENT AND THE TECHNICAL DATA DISCLOSED ARE PROPRIETARY TO CNIT TECHNOLOGIES CO., LTD. AND SHALL NOT BE DUPLICATED USED RELEASED OR DISCLOSED WITHOUT EXPRESSING WRITTEN PERMISSION.

20220314:MODIFIED BY L00317 FOR 2U2 G6

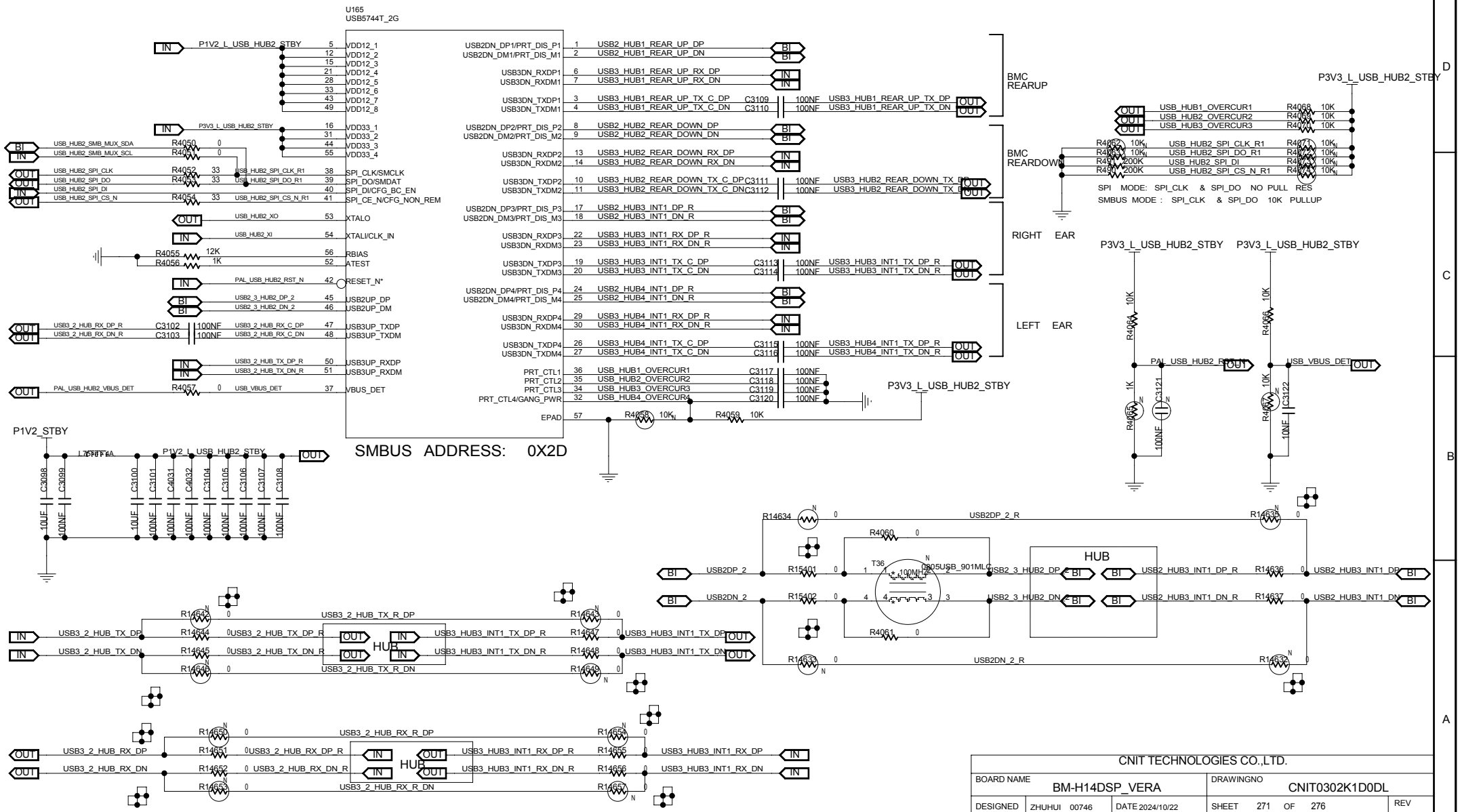

MODULE=---

FUNCTION=---

CNIT TECHNOLOGIES CO.,LTD.				
BOARD NAME BM-H14DSP_VERA			DRAWINGNO CNIT0302K1D0DL	
DESIGNED	ZHUHUI 00746	DATE 2024/10/22	SHEET 271 OF 276	REV
REVIEWED	GUBIN 00260	DATE 2024/11/22	Thu Jan 02 22:18:24 2025	

THIS DOCUMENT AND THE TECHNICAL DATA DISCLOSED ARE PROPRIETARY TO CNIT TECHNOLOGIES CO., LTD. AND SHALL NOT BE DUPLICATED USED RELEASED OR DISCLOSED WITHOUT EXPRESSING WRITTEN PERMISSION.

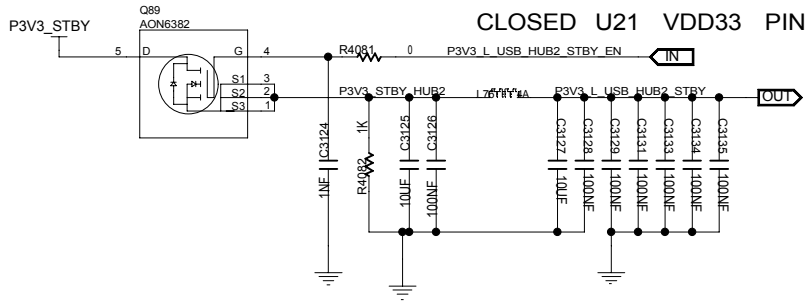

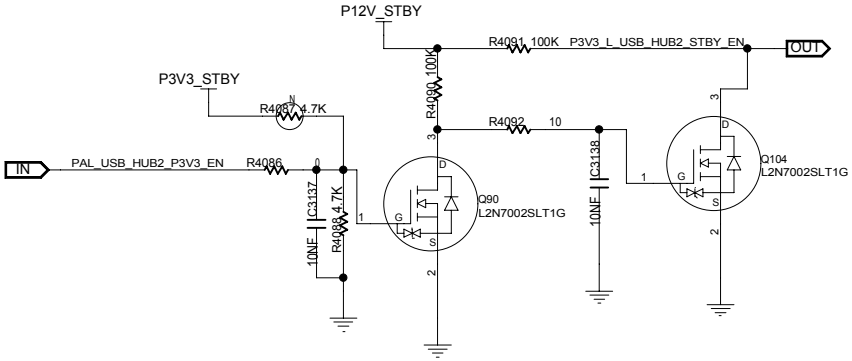

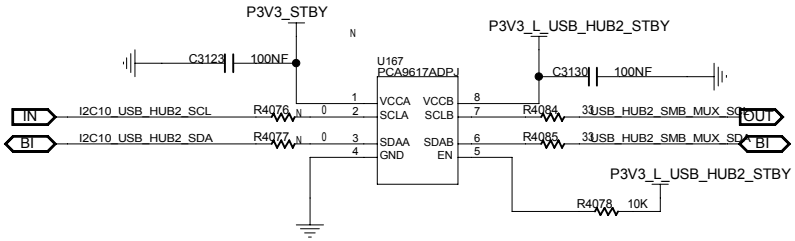

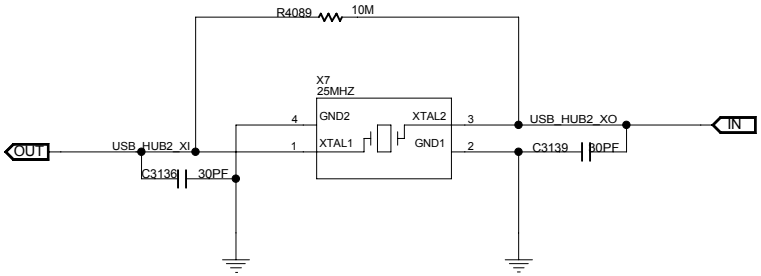

C1930,C1931 30PF

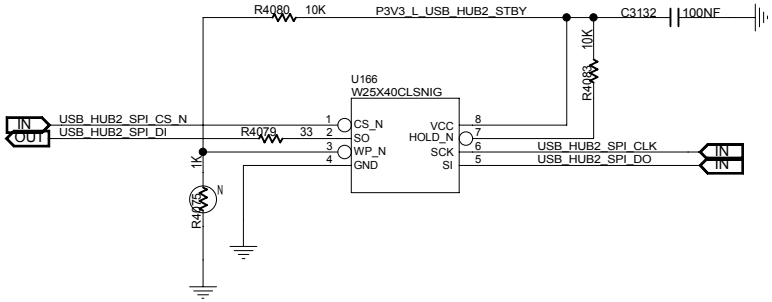

MODULE=---

FUNCTION=---

CNIT TECHNOLOGIES CO.,LTD.				
BOARD NAME BM-H14DSP_VERA			DRAWINGNO CNIT0302K1D0DL	
DESIGNED	ZHUHUI 00746	DATE 2024/10/22	SHEET 272 OF 276	REV
REVIEWED	GUBIN 00260	DATE 2024/11/22	Thu Jan 02 22:18:30 2025	

THIS DOCUMENT AND THE TECHNICAL DATA DISCLOSED ARE PROPRIETARY TO CNIT TECHNOLOGIES CO., LTD. AND SHALL NOT BE DUPLICATED USED RELEASED OR DISCLOSED WITHOUT EXPRESSING WRITTEN PERMISSION.

20220316:ADD INNER USB3.0 BY L00317

INNER USB3.0*2

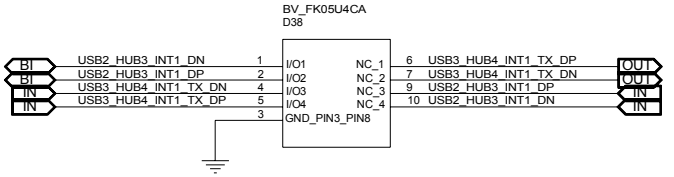

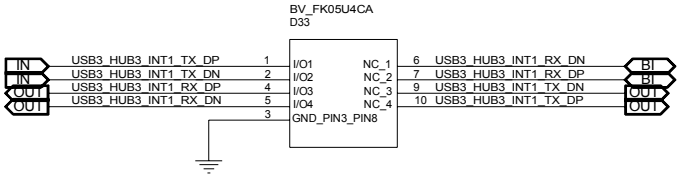

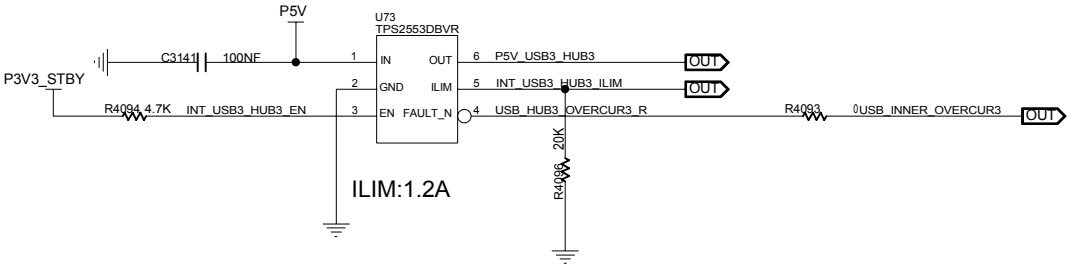

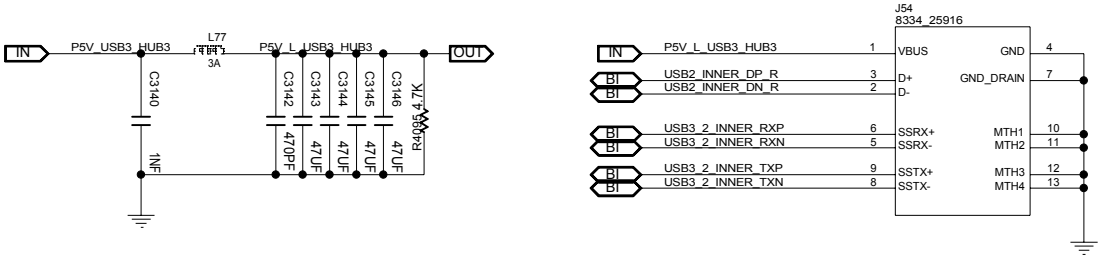

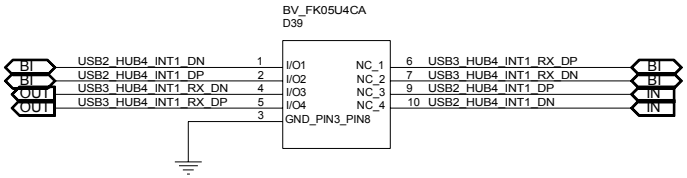

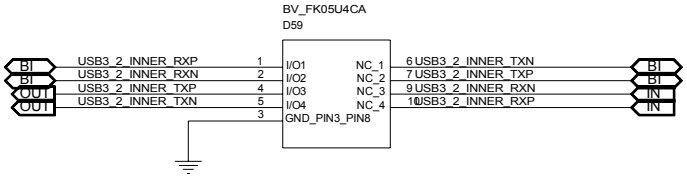

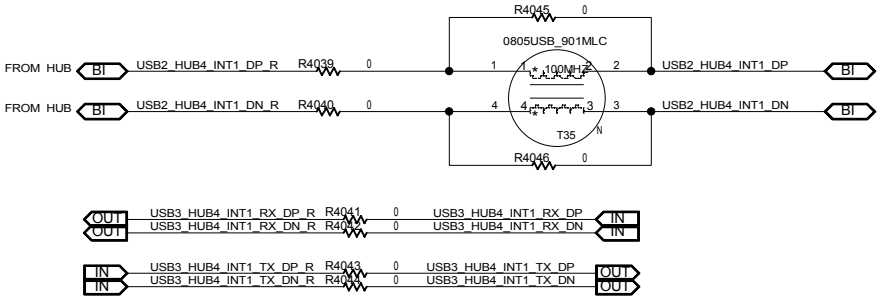

MODULE=---

FUNCTION=---

CNIT TECHNOLOGIES CO.,LTD.				
BOARD NAME BM-H14DSP_VERA			DRAWINGNO CNIT0302K1D0DL	
DESIGNED	ZHUHUI 00746	DATE 2024/10/22	SHEET 273 OF 276	REV
REVIEWED	GUBIN 00260	DATE 2024/11/22	Thu Jan 02 22:18:34 2025	

THIS DOCUMENT AND THE TECHNICAL DATA DISCLOSED ARE PROPRIETARY TO CNIT TECHNOLOGIES CO., LTD. AND SHALL NOT BE DUPLICATED USED RELEASED OR DISCLOSED WITHOUT EXPRESSING WRITTEN PERMISSION.

BIOS_SPI

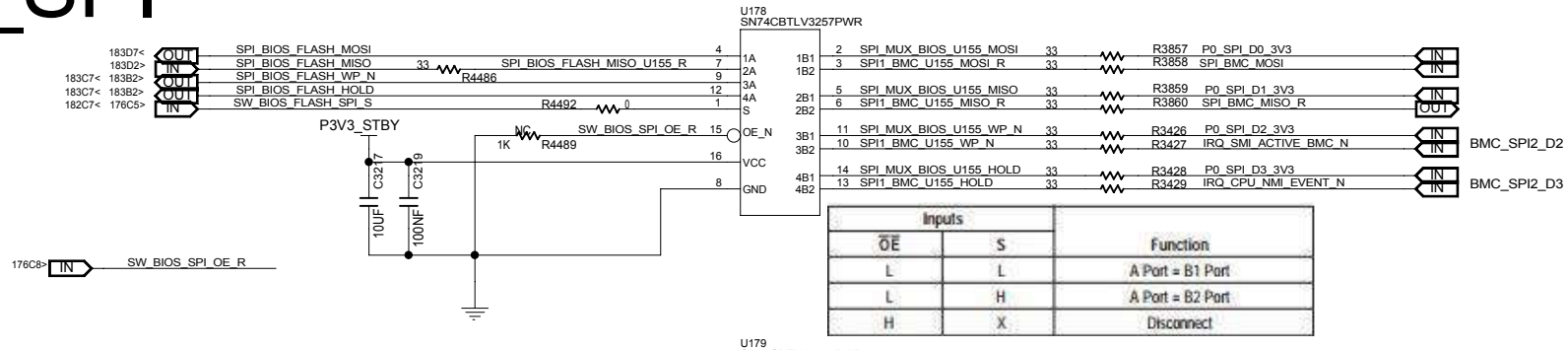

Inputs		Function
$\overline{OE}$	S	
L	L	A Port = B1 Port
L	H	A Port = B2 Port
H	X	Disconnect

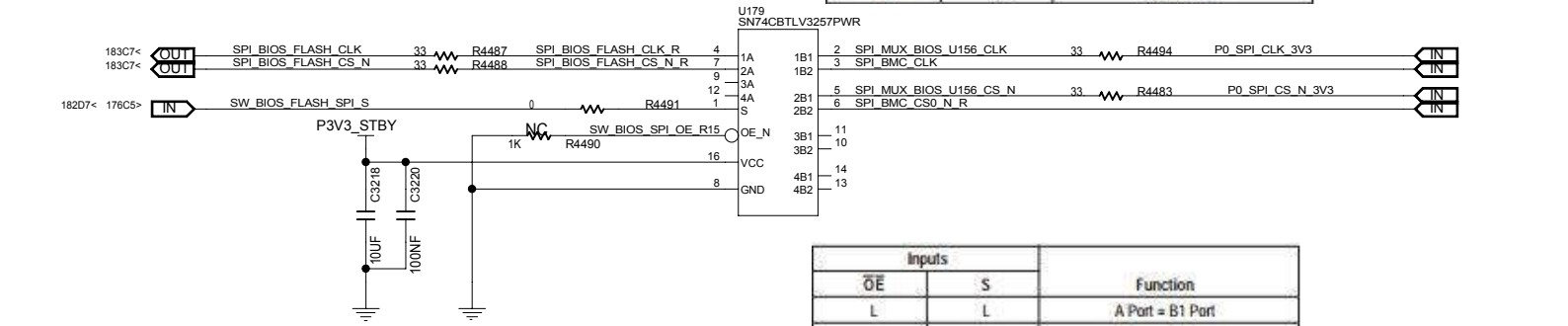

Inputs		Function
$\overline{OE}$	S	
L	L	A Port = B1 Port
L	H	A Port = B2 Port
H	X	Disconnect

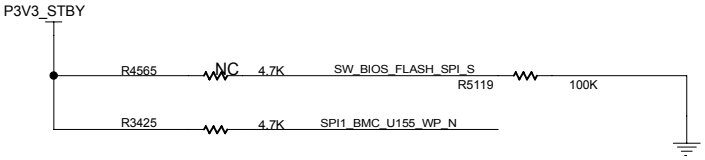

MODULE=---

FUNCTION=---

CNIT TECHNOLOGIES CO.,LTD.				
BOARD NAME BM-H14DSP_VERA			DRAWINGNO CNIT0302K1D0DL	
DESIGNED	ZHUHUI 00746	DATE 2024/10/22	SHEET 274 OF 276	REV
REVIEWED	GUBIN 00260	DATE 2024/11/22	Thu Jan 02 22:18:39 2025	

THIS DOCUMENT AND THE TECHNICAL DATA DISCLOSED ARE PROPRIETARY TO CNIT TECHNOLOGIES CO., LTD. AND SHALL NOT BE DUPLICATED USED RELEASED OR DISCLOSED WITHOUT EXPRESSING WRITTEN PERMISSION.

BIOS_SPI

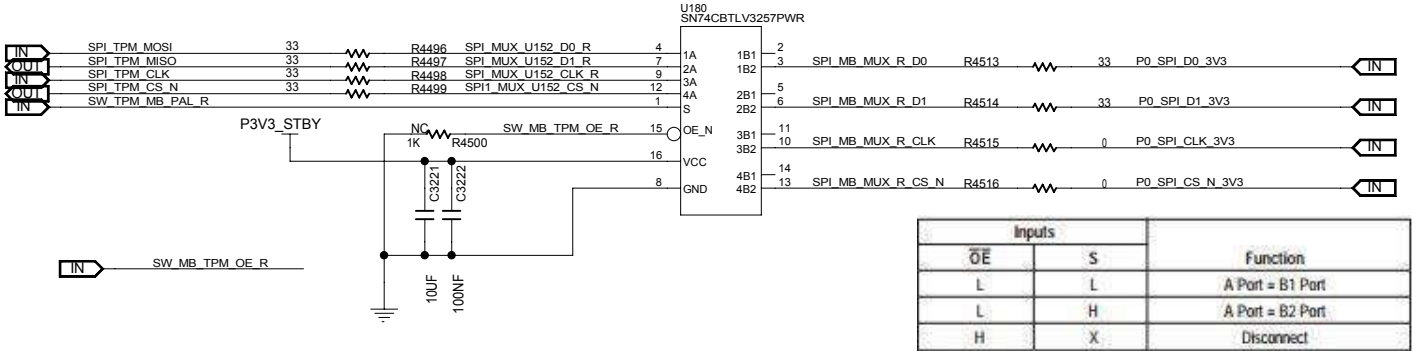

Inputs		Function
$\overline{OE}$	S	
L	L	A Port = B1 Port
L	H	A Port = B2 Port
H	X	Disconnect

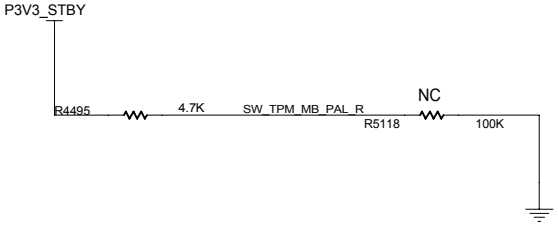

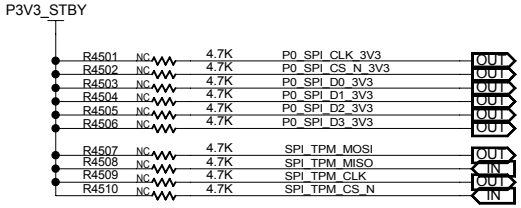

MODULE=---
FUNCTION=---

CNIT TECHNOLOGIES CO.,LTD.				
BOARD NAME BM-H14DSP_VERA			DRAWINGNO CNIT0302K1D0DL	
DESIGNED	ZHUHUI 00746	DATE 2024/10/22	SHEET 275 OF 276	REV
REVIEWED	GUBIN 00260	DATE 2024/11/22	Wed Jan 08 14:09:59 2025	

THIS DOCUMENT AND THE TECHNICAL DATA DISCLOSED ARE PROPRIETARY TO CNIT TECHNOLOGIES CO., LTD. AND SHALL NOT BE DUPLICATED USED RELEASED OR DISCLOSED WITHOUT EXPRESSING WRITTEN PERMISSION.

BIOS_FLASH

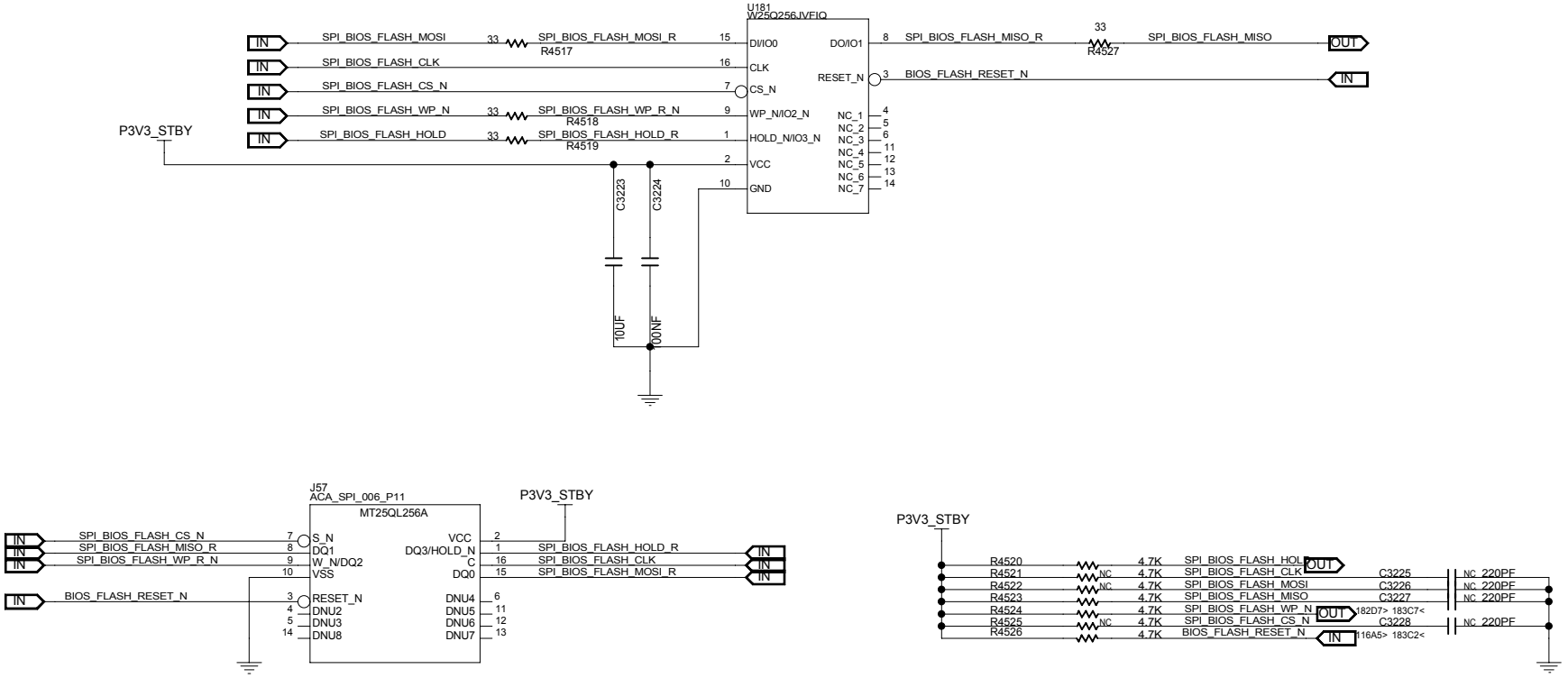

MODULE=---

FUNCTION=---

CNIT TECHNOLOGIES CO.,LTD.				
BOARD NAME BM-H14DSP_VERA			DRAWINGNO CNIT0302K1D0DL	
DESIGNED	ZHUHUI 00746	DATE 2024/10/22	SHEET 276 OF 276	REV
REVIEWED	GUBIN 00260	DATE 2024/11/22	Fri Dec 27 11:56:56 2024	

THIS DOCUMENT AND THE TECHNICAL DATA DISCLOSED ARE PROPRIETARY TO CNIT TECHNOLOGIES CO., LTD. AND SHALL NOT BE DUPLICATED USED RELEASED OR DISCLOSED WITHOUT EXPRESSING WRITTEN PERMISSION.