ITEM NO.	PART NUMBER	DESCRIPTION	QTY.
1	SPLIT_BOTTOM_BOARD _TEST_V5	V4 SPLIT_BOTTOM_BOARD WITHOUT HOLES FOR MEZZANINE PCB	1
2	SPLIT_Middle_TEST		2
3	SPLIT_TOP_BOARD_TEST -V4	24DEC SPLIT TOP BOARD TEST Version 4	1
4	ESQ-126-37-G-D		2
5	CU		1
6	MCAT-4CU-C-BPR4	MCAT Subsystem Backplane PCB Right for Canyval bus by HAQUE Version 4	1
7	MCAT-4CU-C-BPL5	MCAT Subsystem Backplane PCB Left for Canyval bus by HAQUE Version 4	1
8	Holder_Anode_Two		2
9	Holder_Anode_One		2
10	SMTRAM2-6-5ET_3D		12
11	keystone-PN29311		4
12	M20-30-M-SS-UT-USMICROSCREW-3MM		12
13	BELLEVILLE Spring Lock Washer McMaster-Carr 90895A005	McMaster-Carr 90895A005 #5 and M3 Screw Size Spring Lock Washter	2
14	modified-12MM465-from-r30-5001402		2
15	r30-5001802		1
16	5025985193		4
17	ZW-26-10-G-D-516-90		2
18	s4011-46		12
19	MURATA 5600 Series 10A Current Sensing Transformer Mockup		4
20	FH40-60S-0.5SV		4
21	FPC-60PIN		2
22	Toroid Core Magnetics 58312 26u 18AWG 1x1	Magnetics Toroidal Core OD 22.9 58312 with 18 awg wire on all sides	4
23	User Library-IXFV 36N50P Power NMOS		4
24	781715007		1
25	781725007		1

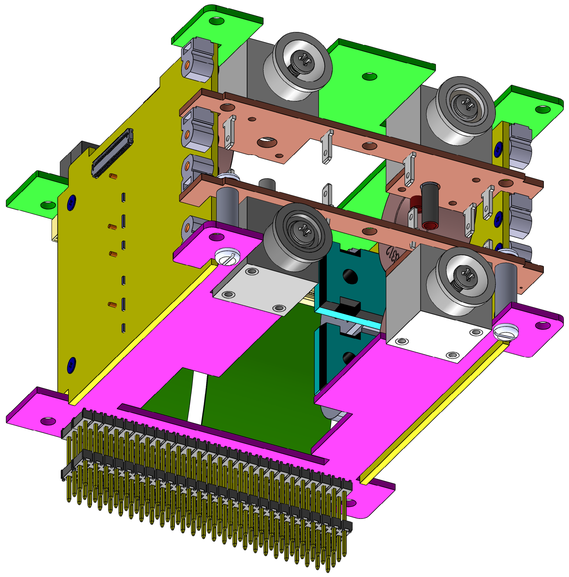

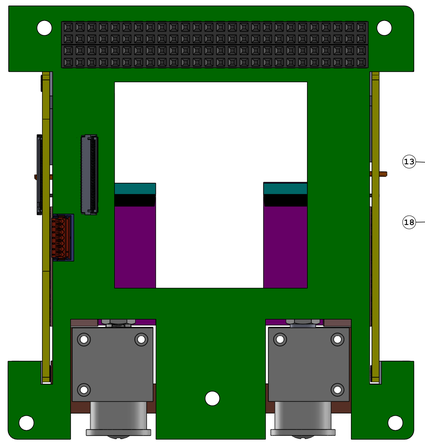

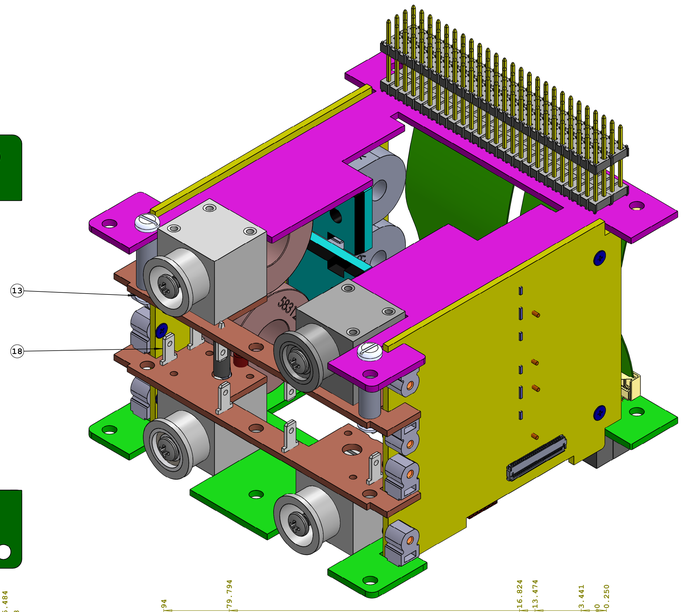

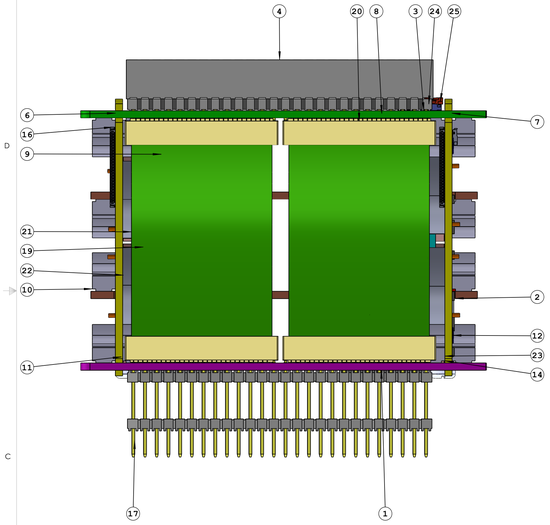

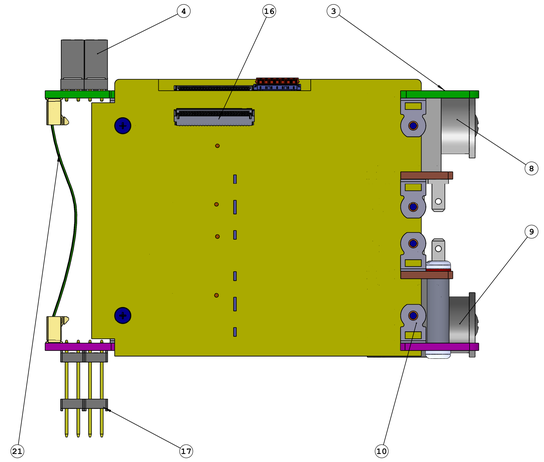

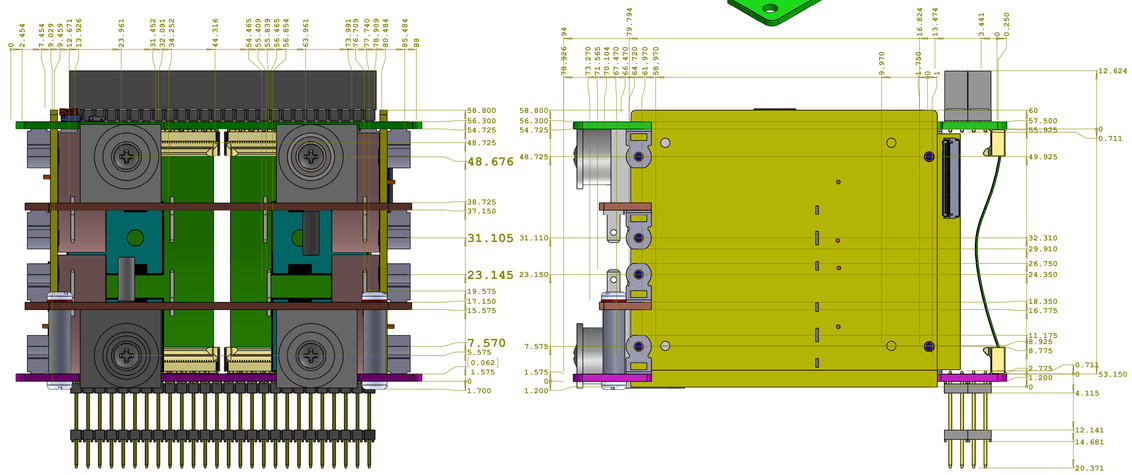

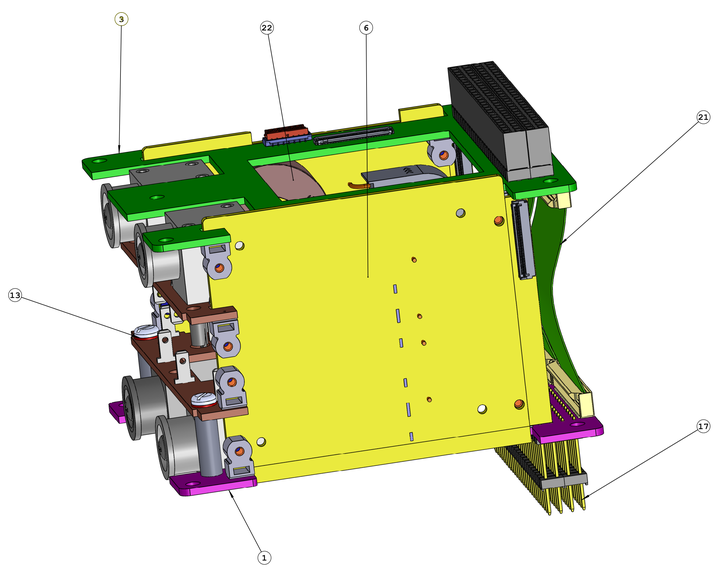

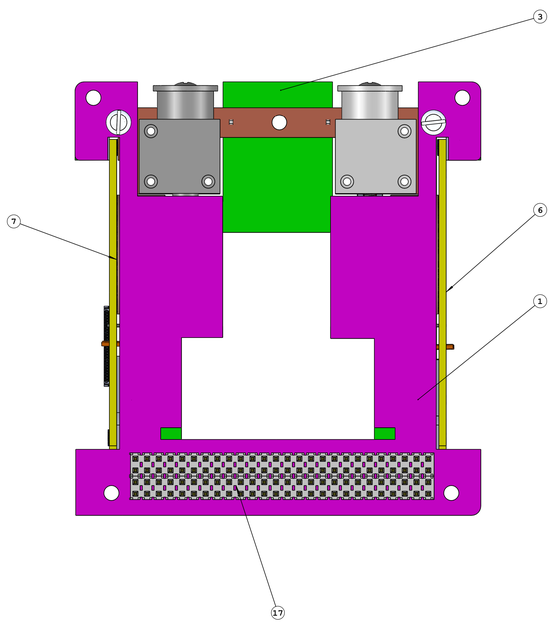

PROPRIETARY AND CONFIDENTIAL
THE INFORMATION CONTAINED IN THIS DRAWING IS THE SOLE PROPERTY OF The George Washington University. ANY REPRODUCTION IN PART OR AS A WHOLE WITHOUT THE WRITTEN PERMISSION OF The George Washington University IS PROHIBITED.

NEXT ASSY | USED ON
APPLICATION

UNLESS OTHERWISE SPECIFIED:
DIMENSIONS ARE IN MM
TOLERANCES:
FRACTIONAL ±
ANGULAR: MACH ± BEND ±
TWO PLACE DECIMAL ±.01
THREE PLACE DECIMAL ±.001
INTERPRET GEOMETRIC TOLERANCING PER:
MATERIAL
FINISH

	NAME	DATE
DRAWN	SEH	27FEB15
CHECKED		
ENG APPR.		
MFG APPR.		
Q.A.		

COMMENTS:

TITLE:
MpNL MCAT Canyval-X Subsystem

SIZE E | DWG. NO. VTD-MPNL_MCAT_CANYVAL_SUBSYSTEM | REV V7D
SCALE: 2:1 WEIGHT: SHEET 1 OF 1