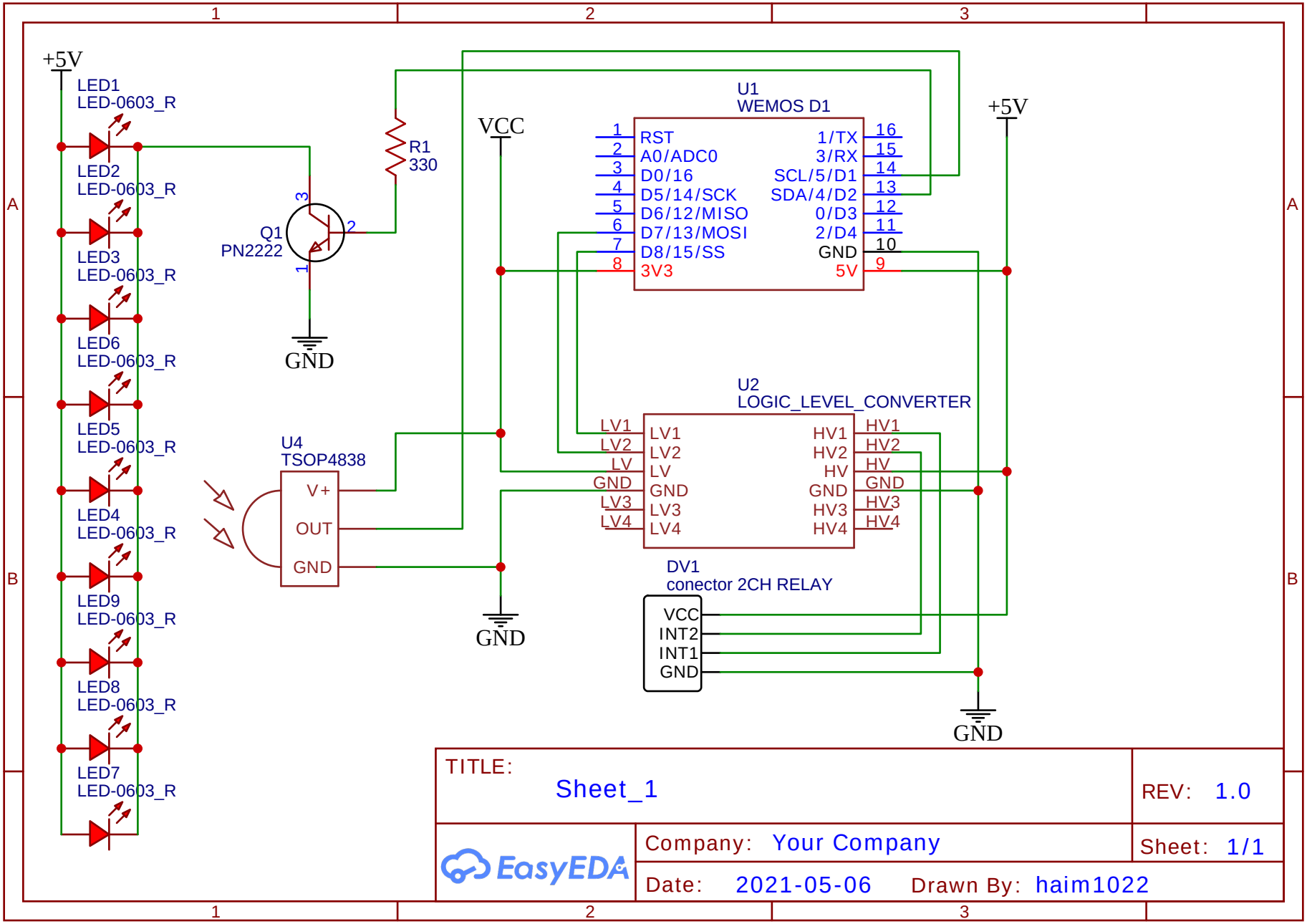
+5V
LED1
LED-0603_R
LED2
LED-0603_R
LED3
LED-0603_R
LED6
LED-0603_R
LED5
LED-0603_R
LED4
LED-0603_R
LED9
LED-0603_R
LED8
LED-0603_R
LED7
LED-0603_R
Q1
PN2222
R1
330
GND
U4
TSOP4838
V+
OUT
GND
VCC
U1
WEMOS D1
RST
A0/ADC0
D0/16
D5/14/SCK
D6/12/MISO
D7/13/MOSI
D8/15/SS
3V3
1/TX
3/RX
SCL/5/D1
SDA/4/D2
0/D3
2/D4
GND
5V
+5V
U2
LOGIC_LEVEL_CONVERTER
LV1
LV2
LV
GND
LV3
LV4
HV1
HV2
HV
GND
HV3
HV4
DV1
conector 2CH RELAY
VCC
INT2
INT1
GND
GND
TITLE:
Sheet_1
REV: 1.0
Company: Your Company
Sheet: 1/1
Date: 2021-05-06
Drawn By: haim1022
EasyEDA