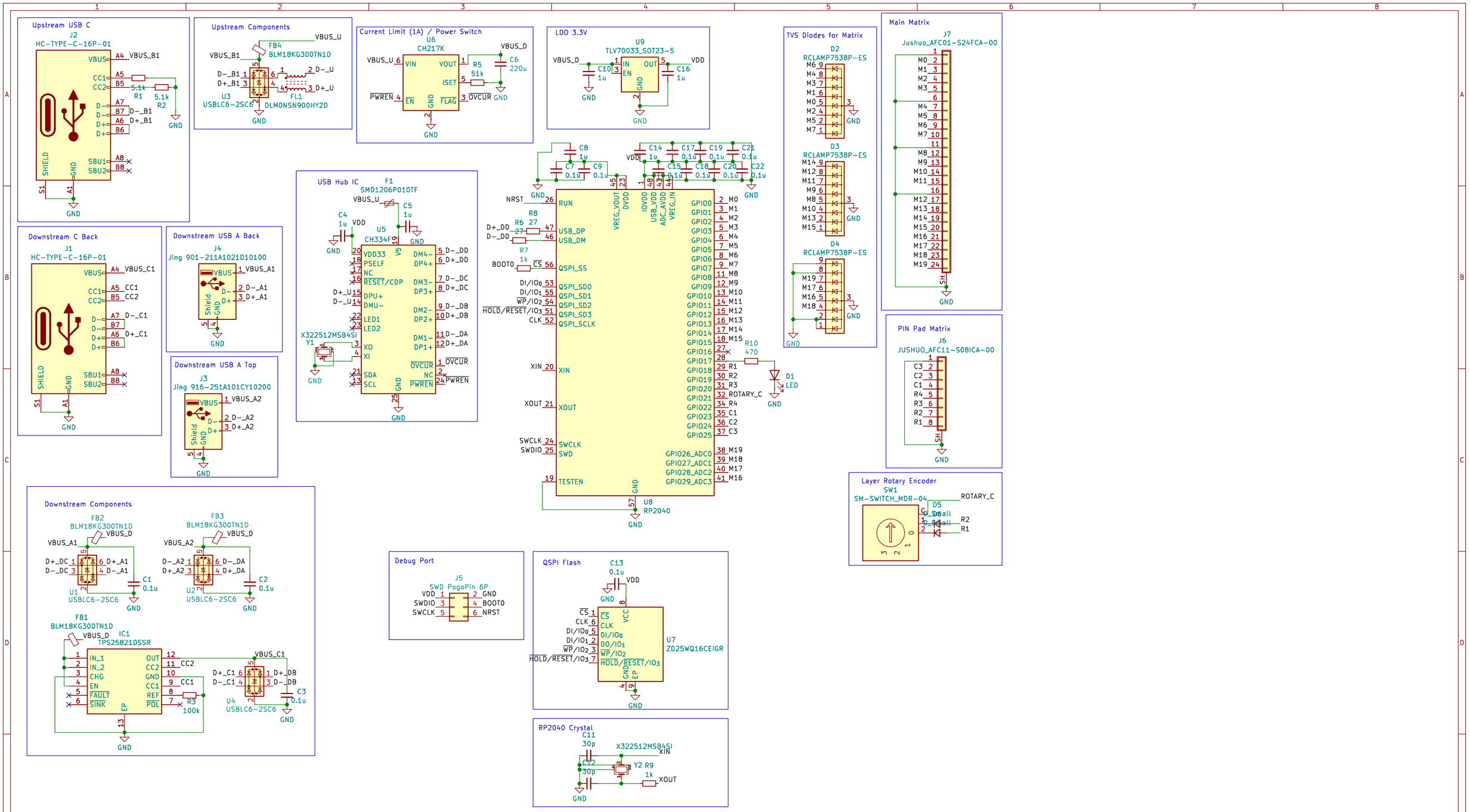
Upstream USB C
J2
HC-TYPE-C-16P-01
Upstream Components
FB4
BLM18KG300TN1D
U3
USBLC6-2SC6
FL1
DLM0NSN900HY2D
Current Limit (1A) / Power Switch
U6
CH217K
R5
51k
C6
220u
LDO 3.3V
U9
TLV70033_SOT23-5
C10
1u
C16
1u
TVS Diodes for Matrix
D2
RCLAMP7538P-ES
D3
RCLAMP7538P-ES
D4
RCLAMP7538P-ES
Main Matrix
J7
Jushuo_AFC01-S24FCA-00
Downstream C Back
J1
HC-TYPE-C-16P-01
Downstream USB A Back
J4
Jing 901-211A1021D10100
Downstream USB A Top
J3
Jing 916-251A101CY10200
USB Hub IC
F1
SMD1206P010TF
U5
CH334F
C4
1u
C5
1u
X322512MSB4SI
Y1
C8
1u
C7
0.1u
C9
0.1u
C14
1u
C17
0.1u
C19
0.1u
C21
0.1u
C15
0.1u
C18
0.1u
C20
0.1u
C22
0.1u
R8
27
R6
27
R7
1k
R10
470
D1
LED
U8
RP2040
PIN Pad Matrix
J6
JUSHUO_AFC11-S08ICA-00
Layer Rotary Encoder
SW1
SM-SWITCH_MDR-04
D5
Small
Small
Downstream Components
FB2
BLM18KG300TN1D
FB3
BLM18KG300TN1D
U1
USBLC6-2SC6
U2
USBLC6-2SC6
C1
0.1u
C2
0.1u
FB1
BLM18KG300TN1D
IC1
TPS25821DSSR
R3
100k
U4
USBLC6-2SC6
C3
0.1u
Debug Port
J5
SWD PogoPin 6P
QSPI Flash
C13
0.1u
U7
ZD25WQ16CEIGR
RP2040 Crystal
C11
30p
C12
30p
Y2
1k
Sheet: /
File: nanaju-main.kicad_sch
Title:
Size: A3
Date: 2025-09-22
Rev:
KiCad E.D.A. 9.0.6
Id: 1/1