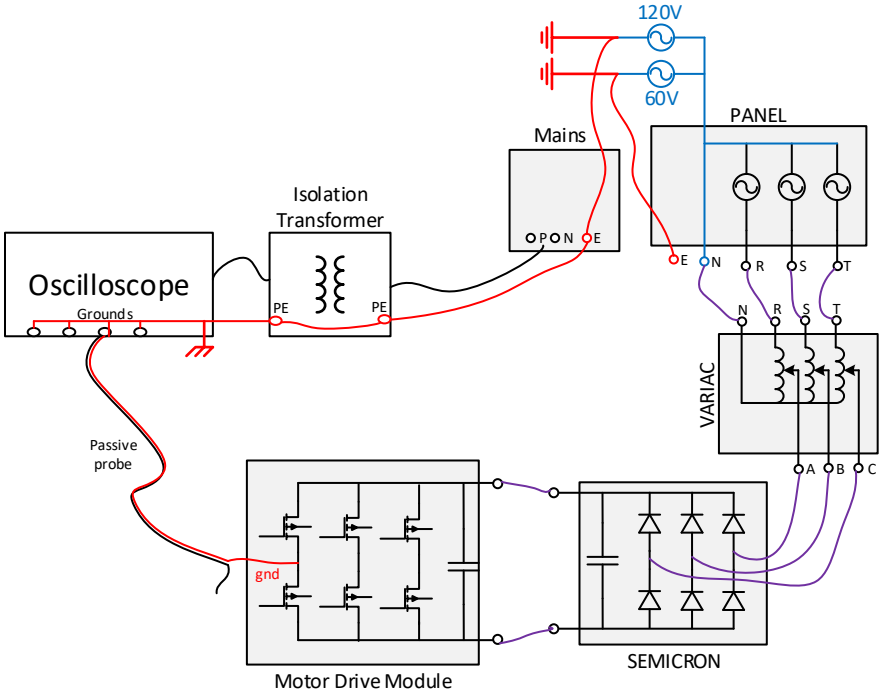
120V
60V
PANEL
Mains
Isolation
Transformer
Oscilloscope
Grounds
PE
PE
P N E
E N R S T
N R S T
VARIAC
A B C
Passive
probe
gnd
Motor Drive Module
SEMICRON

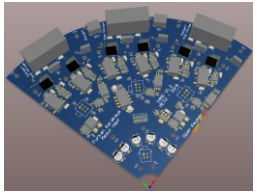

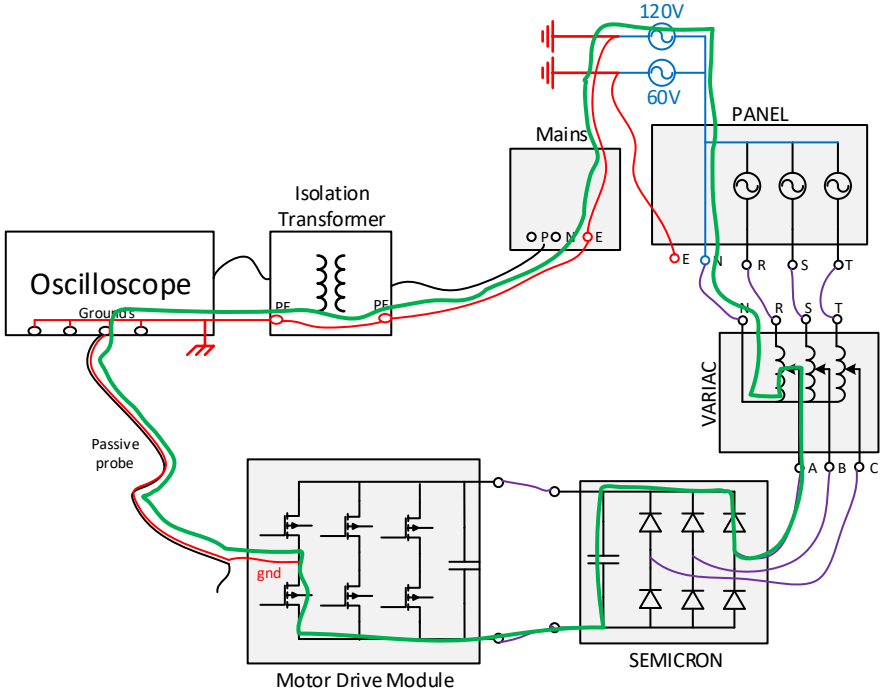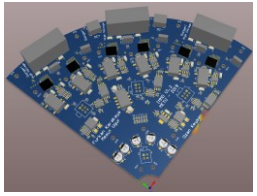
120V
60V
PANEL
Mains
Isolation
Transformer
Oscilloscope
Grounds
PE
PE
P N E
E N R S T
N R S T
VARIAC
A B C
Passive
probe
gnd
Motor Drive Module
SEMICRON