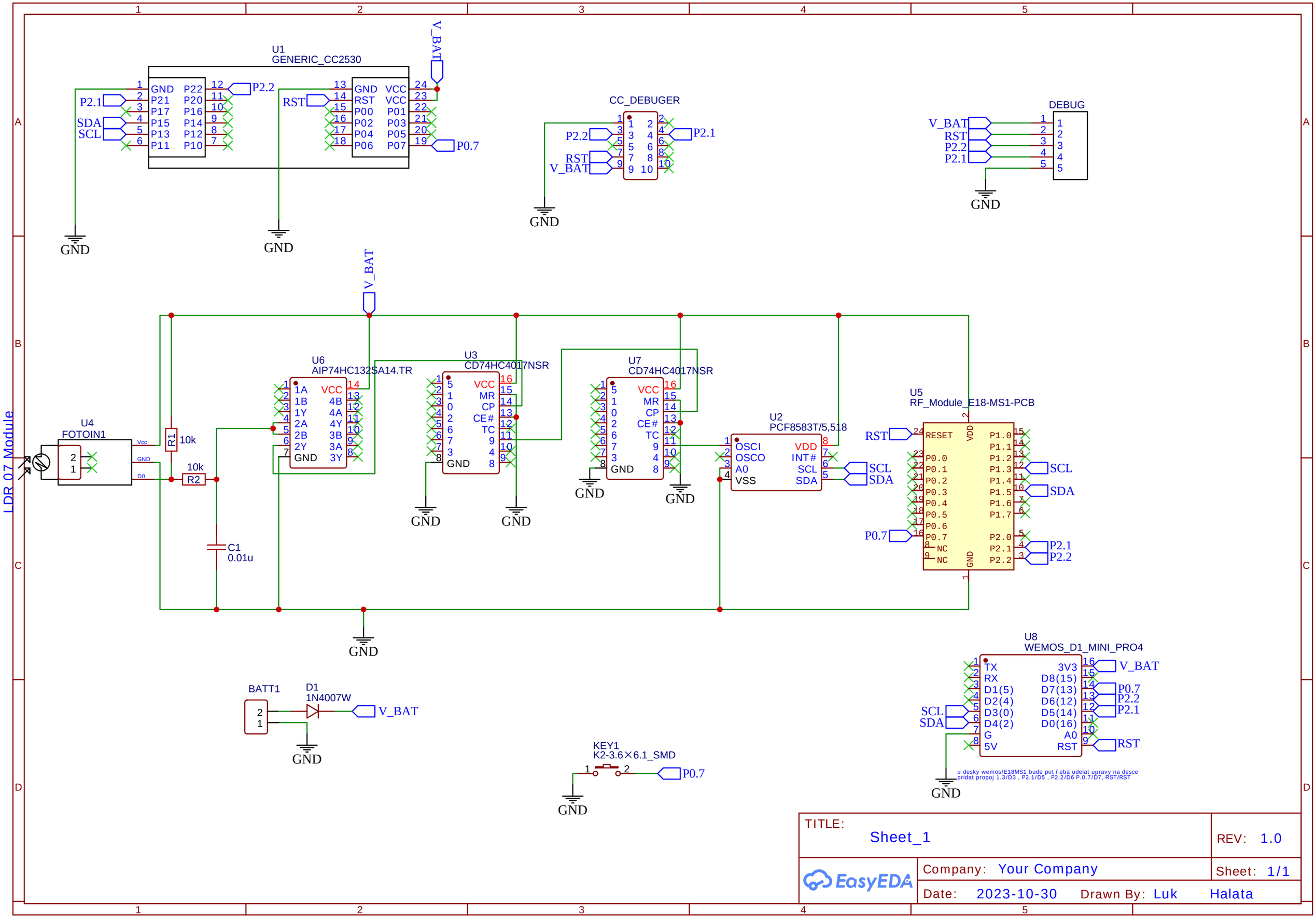
U1
GENERIC_CC2530
GND P22 P21 P20 P17 P16 P15 P14 P13 P12 P11 P10
GND RST P00 P02 P04 P06 VCC VCC P01 P03 P05 P07
P2.1
SDA
SCL
P2.2
RST
V_BAT
P0.7
GND
CC_DEBUGER
P2.2
RST
V_BAT
P2.1
DEBUG
V_BAT
RST
P2.2
P2.1
U6
AIP74HC132SA14.TR
1A 1B 1Y 2A 2B 2Y GND VCC 4B 4A 4Y 3B 3A 3Y
U3
CD74HC4017NSR
VCC MR CP CE# TC GND
U7
CD74HC4017NSR
VCC MR CP CE# TC GND
U4
FOTOIN1
Vcc GND D0
R1 10k
R2 10k
C1
0.01u
U2
PCF8583T/5,518
OSCI OSCO A0 VSS VDD INT# SCL SDA
U5
RF_Module_E18-MS1-PCB
RESET P0.0 P0.1 P0.2 P0.3 P0.4 P0.5 P0.6 P0.7 NC NC VDD GND P1.0 P1.1 P1.2 P1.3 P1.4 P1.5 P1.6 P1.7 P2.0 P2.1 P2.2
LDR_07_Module
U8
WEMOS_D1_MINI_PRO4
TX RX D1(5) D2(4) D3(0) D4(2) G 5V 3V3 D8(15) D7(13) D6(12) D5(14) D0(16) A0 RST
u desky wemos/E18MS1 bude pot ř eba udelat upravy na desce
pridat propoj 1.3/D3 , P2.1/D5 , P2.2/D6 P.0.7/D7, RST/RST
BATT1
D1
1N4007W
KEY1
K2-3.6×6.1_SMD
TITLE:
Sheet_1
REV: 1.0
Company: Your Company
Sheet: 1/1
Date: 2023-10-30
Drawn By: Luk Halata
EasyEDA