TrailRider 5.0 Recommendation

November 15, 2019

Presented by the Mechanical Engineering Students of the University of British Columbia

Andrea Escoto 53587333
Carson Hopkins 17042169
Julia Zhuravleva 37087160
Lukas Slotman 25823162
Ratthamnoon Prakitpong 63205165
Stephen Abraham 61092152

Table of Contents

Table of Contents **1**

1.0 Introduction **4**
- 1.1 Purpose 4
- 1.2 Background 4
- 1.3 Value Proposition 4

2.0 Development **5**
- 2.1 Conveyed Needs 5
- 2.2 Needs and Requirements 5
- 2.3 Project Scope and Target Market 6
- 2.4 Design Specifications 7
- 2.5 Conceptual Solutions 7

3.0 Recommendation **10**
- 3.1 Conclusion 10
- 3.2 Recommendation 11
- 3.3 Limitations 11

Appendix A: Background **12**

Appendix B: Investigation **13**

Appendix C: Literature Research **15**
- Appendix C References 16

Appendix D: Needs, Requirements and Evaluation Criteria **17**

Appendix E: Concept Development and Selection **26**
- Function Decomposition 26
- Concept Fragments 26
- Concept Fragment Ranking and Compatibility Issues 31
- Full Concepts 31
- Winnowing 38
- Concepts for Evaluation 39
- Weighted Decision Matrix 44

Appendix F: Engineering Calculations and Analyses **49**
- F-1 Train Value Calculations 49
  - F-1.1 Rationale for this calculation 49
  - F-1.2 Deriving the governing equations 49
  - F-1.3 Estimating Parameters 52
  - F-1.4 Calculating the train value 53
- F-1.5 Variable train value option 54
- F-1.6 Limitations 55

F-1.7 Responsible Personnel 58
F-2 Chain and Sprocket Calculations 58
F-2.1 Rationale for this Calculation 58
F-2.2 Governing Equations 59
F-2.3 Summary of Known Values 59
F-2.4 Calculations 60
F-2.5 Conclusion 61
F-2.6 Responsible Personnel 61
F-3 Tipping Calculations 61
F-3.1 Tipping in the roll direction 61
F-3.2 Tipping in the pitch direction 63
F-4 Bearing Calculations 64
F-4.1 Rationale for this Calculation 64
F-4.2 Static Analysis 65
F-4.3 Dynamic Analysis 65
F-4.3 Safety Factor 66
F-5 Lever Check 67
F-4.1 Rationale for this Calculation 67
F-4.1 Bending 67
F-4.1 Fatigue 67
F-6 References 68

Appendix G: Cost of Goods **69**
G-1 Overall Production Cost 69
G-2 Tooling and Setup Costs 69
G-3 Material Costs 69
G-4 Labour Costs 70
G-5 Undefined Costs 71
G-6 Off-Shelf Costs 72

Appendix H: Failure and Safety **74**

Appendix I: Life Cycle Analysis **81**
I-1 Material Extraction 81
I-2 Manufacturing 82
I-3 Operation and Maintenance Cost 82
I-5 End of Life 83

Appendix J: Prototype Testing **84**
J-1 Ergonomics 84
J-2 Fatigue 85
J-3 Frame 85

Appendix K: Project Management Charts **87**

Appendix L: User/Operator Manual Draft **97**

A-1 Assembly 97
A-1.1 Trailrider components 97
A-1.2 Attaching rear wheels 97
A-1.3 Attaching front fork 97
A-1.4 Attaching foot plate 98
A-1.5 Attaching seat cushion 98
A-2 Riding 98
A-2.1 Safety 98
A-2.2 Adjustability 99
A-2.3 Using lever drivetrain 99
A-2.4 Climbing and descending slopes 99
A-2.5 Transfers 100
A-3 Disassembly 100
A-3.1 Removing seat cushion 100
A-3.2 Removing foot plate 100
A-3.3 Removing front fork 100
A-3.4 Removing rear wheels 100
A-4 Maintenance 101
A-4.1 Inflating wheels 101
A-4.2 Chain lubrication and cleaning 101
A-4.3 Chain inspection and replacement 101
A-4.4 Changing gear ratio 101
A-5 Warnings 101

Appendix M: Engineering Drawings **103**

Appendix N: Technical Data **104**

Appendix O: Weekly Reports **105**

Appendix P - Design Considerations **123**
P-1 Sub-Assemblies 123
P-1.1 Frame 124
P-1.2 Seat 124
P-1.3 Drive System 124
P-1.4 Sherpa Handlebars 126
P-1.5 Braking System 126
P-1.6 Wheels 126

1.0 Introduction

1.1 Purpose

This report details the findings of a preliminary investigative process conducted by a sub-ground of Mechanical Engineering students at the University of British Columbia in response to a request for proposal from the British Columbia Mobility Opportunities Society (hereafter, BCMOS). BCMOS (hereafter, the client) requested an improved rough terrain wheelchair that addresses the areas of improvement of the current TrailRider (version 4.0) offering while retaining its strengths. The primary interest for areas of improvement is detailed in section 2.3 below as per the target market and scope description following the target specifications identified in section 2.3 in response to the needs and requirements outlined in section 2.1 and 2.2. In summary, the objective herein is to develop an updated TrailRider or a parallel offering that provides rider involvement and requires less sherpa input than the current offering while retaining its durability and the spirit of BCMOS.

1.2 Background

This report and the content herein are intended to build upon the heritage of previous TrailRiders and contribute to the growing 31 year legacy of BCMOS to “reimagine what’s possible”. In exploring the progressive development of a version 5.0 TrailRider, BCMOS will continue to be current in enabling persons with disabilities to partake in off the beaten track adventures with the assistance and company of a close-knit community. Further background information is detailed in Appendix A.

1.3 Value Proposition

The intent is to address the present interest for a device that enables people with mobility impairments to actively participate in social outings to explore unpaved terrain in semi-urban parks.

2.0 Development

2.1 Conveyed Needs

Potential improvements to be addressed were outlined by the client as follows:

1. Strengthen the devices weak points; specifically, the pin system that is prone to failure.
2. Lighten the device for sherpa manageability.
3. Improve manoeuvrability, specifically turning radius.
4. Improve device safety; explore protecting the rider from a fall caused by tipping or develop a device that is resistant to tipping.
5. Include rider involvement to provide full or partial independence.
6. Enable the device to be operable by a single sherpa.
7. Reduce folded transportation volume; explore a smaller device and/or improved ease of disassembly for transportation.
8. Lower production cost to reach less affluent users.
9. Improve devices ability to withstand exposure to water and dirt.
10. Develop search and rescue compatibility.

2.2 Needs and Requirements

Additional needs were unstated but conveyed through conversation with the client as listed below.

1. The devices maintenance can be carried out by bike shops; device components are off the shelf bike components or can be serviced with similar expertise.
2. The device has a breaking mechanism to enable controlling motion on inclined surfaces.
3. The device restrains riders by means of a seat belt, harness, or similar contraption.

Further analysis as detailed in Appendix D lead to the target design specifications below. These were influenced by hands-on experience with the current TrailRider as detailed in Appendix B:

1. The device is more resistant to tipping moments than the current design.
2. The device includes a rider containment harness, seat belt, or equivalent.
3. The device delivered cost shall not exceed 9000 Canadian dollars.
4. The device can be stored and transported within a personal vehicle.
5. The device comfortably seats a parpalegic rider for a minimum of two hours.
6. The device has a predicted service life of at least 10 years with regular maintenance.
7. The device enables rider involvement towards propulsion.

In later design stages, all the above requirements were exceeded and optimized in accordance with the target design specification evaluation criteria as detailed in Appendix D. Evaluation metrics and relevance of design parameters were further explored in the wheelchair standards by ISO/TC 173/SC1. Solutions to these target design specifications and optimizations were developed through collaborative sketching and the investigation of comparable market offerings

as detailed in Appendix C. Following this market research, further information was gathered by means of an interactive word document with BCMOS to clarify intent and real-world usage.

Clarification of licensing and areas of possible patent infringement was excluded from our research as licensing of current technologies is a coordination item not included in the scope of initial design stages pertaining to concept development and feasibility.

Additional requirements and constraints emerged from the timeline and suggested allocation of time and resources as indicated by the client. The target market and scope in section 2.3 below indicate the attainable objectives and project intent as a result of the budgeted hours and development funds available.

2.3 Project Scope and Target Market

Analysis of the aforementioned needs concluded to the decision of a target market of serving those with paraplegia or similar mobility impairments on semi-urban unpaved terrain. This decision was made primarily based off of dialogue with the client, and supplemental research. Given that the clients' weekly events and the majority of trail ride requests are for one of Spanish Banks, Pacific Spirit Park, or Stanley Park, we decided to design for such semi-urban environments. These areas are typically well-established trails and are of sufficient width for a standard wheelchair. While standard wheelchairs are occasionally taken on these trails already, the client identified a major issue is a likelihood of getting stuck and lack of ability to venture off-trail. The second key point identified by the client was a preference for single sherpa operation, and to enable the rider to have a higher level of involvement.

As such, our focus is to generate concepts for a ‘TrailRider 5.0’ with a focus on unpaved urban trails, and the possibility for single sherpa operation with partial or full control by the rider. This market appeals to a larger clientele as easier terrain hikes are generally within a shorter radius from population centres than more technical ones. Implicit in this target market is that our focus is for paraplegics and otherwise disabled persons (i.e. not explicitly for quadriplegics as the current version serves them well). This was supported by the client when interest was expressed in having a device that would provide rider involvement and be single sherpa compatible. Since only 45% of riders return due to guilt for not having some form of a contribution to the experience, we can address that full 55% while retaining the current 45% by focusing on rider involvement. Whether fully or partially independent, this will retain the spirit of BCMOS and enable riders to partake in unpaved semi-urban adventures with the assistance of sherpas, the company of friends, or both.

This constricts the primary scope of the project to focus on line items 5 and 6 in the project outline: to provide user involvement and single sherpa operation. Given the time limitations of this project and the most significant needs as expressed by the client, this scope will enable us to more completely address these two design aspects.

2.4 Design Specifications

Following the findings presented in section 2.3 above, the primary design attributes that we developed were those enabling a means of rider involvement towards propulsion, and reducing the required sherpa input. Relevant scoring metrics and explanations for the numerical values assigned to the conceptual solutions in section 2.5 are detailed in Appendix E.

2.5 Conceptual Solutions

Each significant design aspect of the proposed design directly parallels the target specifications as detailed in Appendix D and can be summarized as follows:

1. The three-wheeled design is stable and resists tipping moments.
2. The lever drive enables active rider involvement towards propulsion.
3. The inclusion of common bike components results in reasonable economics and serviceability.
4. The lever drive and three-wheeled design combine to reduce the required sherpa input towards balance (i.e. safety) and propulsion to reduce the number of sherpas required.

Four complete concepts were evaluated. Concepts A1 and A2 are related, as are B1 and B2 as shown below. The concepts evaluated do not have mechanical means of shock absorption due to the complexity of developing a means of suspending the drivetrain to overcome compatibility issues. More complex suspension systems were explored but were deemed unnecessary for the unpaved urban terrain of intended use. Detailed seat design and materials are not included in this report and can be developed at a later stage. All four of the concepts have rear-mounted handles similar to a standard wheelchair and are fitted with bicycle disc brakes. Further explanation of the evaluation process can be found in Appendices D and E.

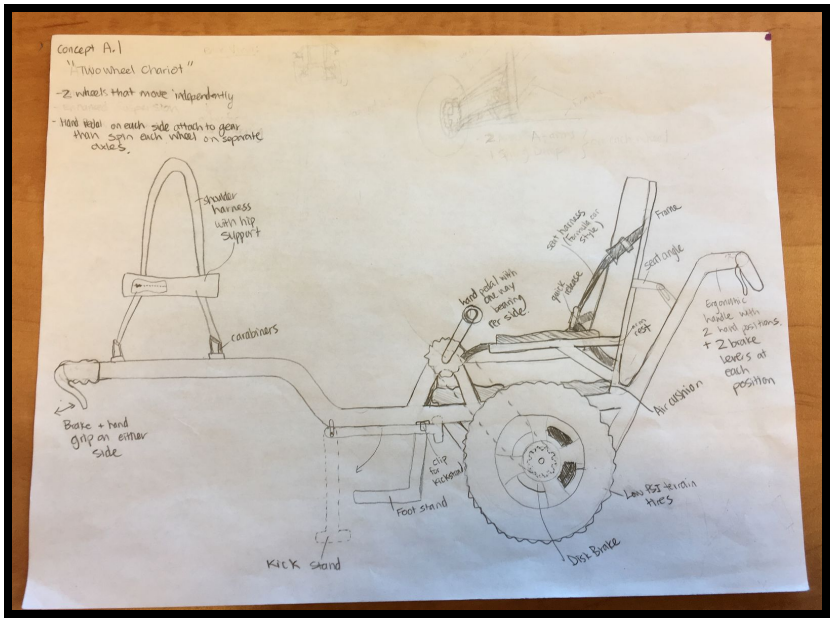

Figure 1: Concept A1 Two-Wheeled Chariot

The Two-Wheeled Chariot (concept A1) uses two independent hand-driven pedals, each propelling one of the two wheels through fixed gearing. Its two front extending rods have handles and a harness to enable ease of sherpa input.

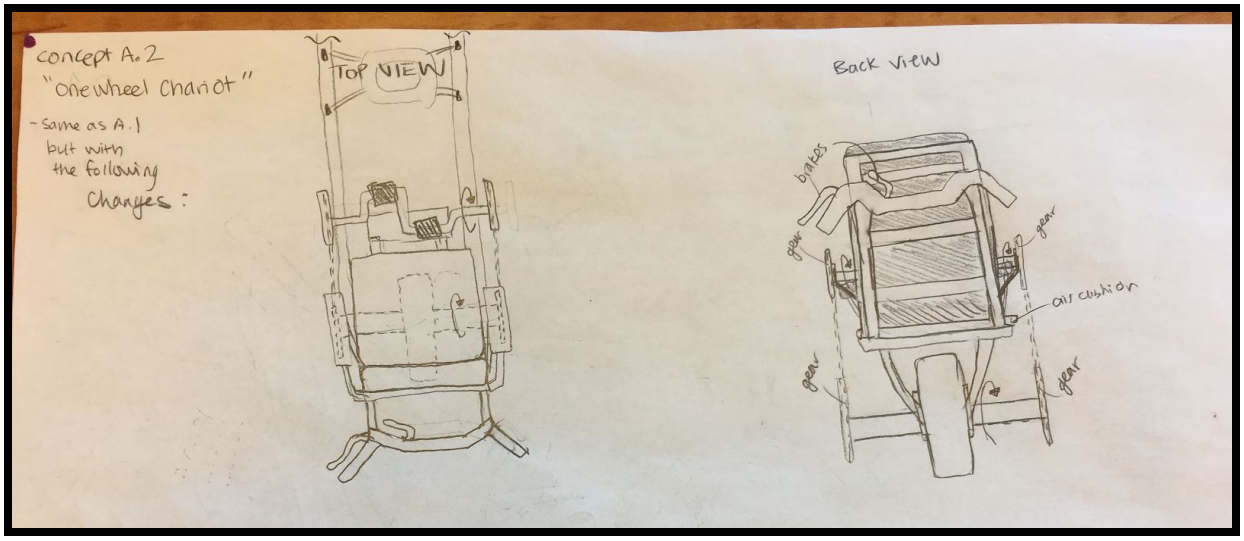

Figure 2: Concept A2 One-Wheeled Chariot

The One-Wheeled Chariot (concept A2) uses two conjoined hand-driven pedals, propelling an axle with one wheel through fixed gearing. Its two front extending rods have handles and a harness to enable ease of sherpa input, as in concept A1.

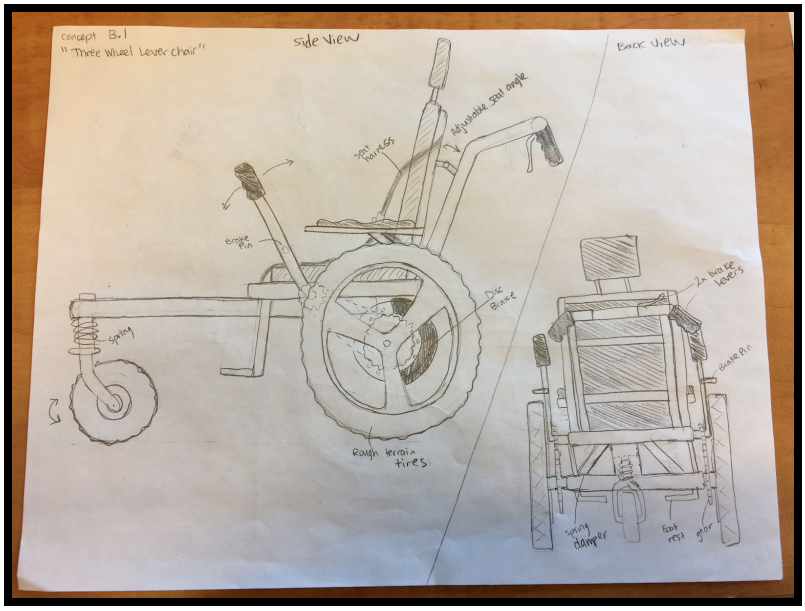

Figure 3: Concept B1 Three-Wheeled Lever Chair

The Three-Wheeled Lever Chair uses two independent lever arm driven sprockets, each propelling one of the two driving wheels through fixed gearing. There is also a hand rim as found on standard wheelchairs for occasions where the added mechanical efficiency of a lever drive is not required. A third wheel in the front replaces the traditional two on a standard wheelchair, sized to overcome larger obstacles, be minimally constrained, and balance the chair without sherpa input.

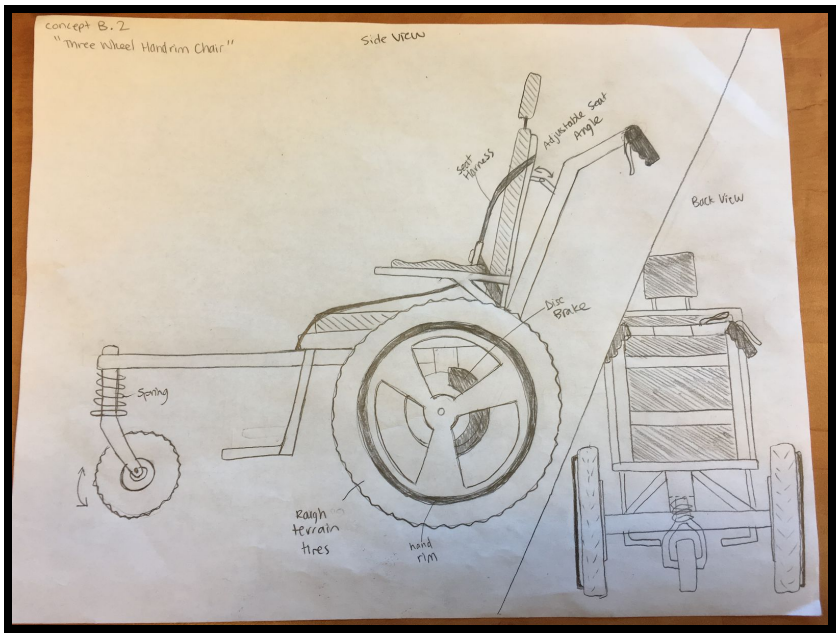

Figure 4: Concept B2 Three-Wheeled Handrim Chair

The Three-Wheeled Handrim Chair uses the rim based propulsion found on standard wheelchairs. It also has a third wheel in the front which is identical to the system described for concept B1.

3.0 Recommendation

3.1 Conclusion

As per the target requirements and target design specifications detailed in section 2.2 and the process outlined in Appendices D and E, the design that best aligns with the target market and scope as per section 2.3 is concept B1, the Three-Wheeled Lever Chair (see Figure 5). The scoring indicated in our weighted decision matrix (see Appendix E) considered only the highest-ranked needs (see Appendix D). Both B1 and B2 scored equivalent or higher than A1 and A2 in the categories of sherpa input required and cost. What set concept B1 apart was the mechanical efficiency of the lever drive rider input system for which it won. Each of the requirements detailed in section 2.2 is met with this design. Supportive calculations are detailed in Appendix F, and a cost breakdown is detailed in Appendix G.

Table 1: Final State of Requirements

Requirement	Status	Notes
Delivered cost below $9000	✔	The estimated cost is $2611
Transportable in a personal vehicle	✔	Detachable bicycle components
Comfortable for 2 hour period	✔	Reasonable as per comparable designs
Predicted service life is 10 years	✔	Safety factors and part lifespan
Enables rider input towards propulsion	✔	Input by means of a lever drive system

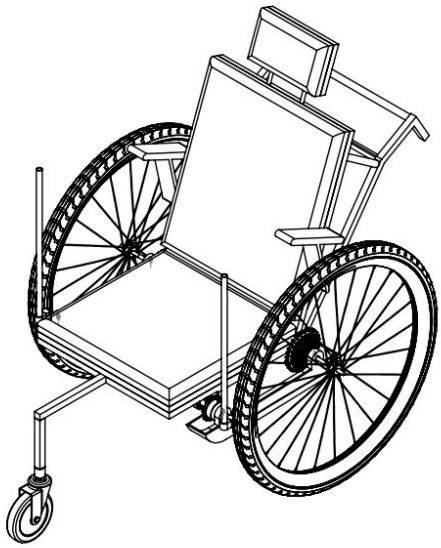

Figure 5: Final Design Isometric View

3.2 Recommendation

As supported by the conclusion detailed in section 3.1 above, our recommendation is that BCMOS proceed with the development of a parallel offering to the current TrailRider. As detailed in the target market and scope explanation in section 2.3, this will provide a superior solution for the majority of riders who partake in semi-urban adventures on unpaved trails resembling Pacific Spirit and Stanley Park. This offering will have a lower cost than the current offering while reducing the sherpa input required and increasing rider involvement. It maintains the spirit of BCMOS, enabling riders to partake in unpaved semi-urban adventures with the assistance of sherpas, the company of friends, or both.

3.3 Limitations

All recommendations herein are intended as a basis for further development. Given the time limitations as previously detailed in section 2.3, the design herein focuses primarily on the propulsion system and provides less detail on less deterministic functions (see Appendix P). The specification of parts (see Appendix N) is incomplete given the magnitude of time associated with addressing all compatibility concerns. Also, the included calculations (see Appendix F) represent a resolution representative of prototype development and testing and should not be interpreted as a complete analysis of a final product for public use or sale. In order to proceed with the development of the recommended design, the part specification process requires completion such that a working and fully functional prototype can be assembled and tested in accordance with Appendix J. All prototype parts and materials shall be sourced in accordance with Appendix G. Likewise, the calculations in Appendix F are based directly from dimensions in accordance with the engineering drawings in Appendix M. All calculations should be confirmed such as to ensure the initial assumptions are valid with the final part specifications. Operation of any prototype should be conducted in accordance with the Appendix L user manual draft.

Appendix A: Background

Our recommendation will be a direct response to the “TrailRider™ 5.0” proposal prepared by the UBC Department of Mechanical Engineering in conjunction with The Disability Foundation. The proposal is for an improved design of the rough-terrain wheelchair. Currently, riders must endure shock and assistants must be strong. The goal of the improved design is to expand the range of riders and assistants that can use the device. The proposal document introduces the single-wheeled wheelchair, provides some background on how it is used, and goes over the main features. Additionally, it lists ten potential improvements that BCMOS would like to be addressed. Listed below is a summary of our next steps in developing a recommendation for the new device:

1. Read through course guide and marking rubric as a team
2. Outline team expectations
3. Create a Gantt chart to keep the project on track
4. Create a risk register to mitigate team risk
5. Interview BCMOS representative
6. Identify stakeholders and needs
7. Complete research on rough terrain wheelchairs
8. Set a project scope
9. Identify a target market
10. Set requirements and specifications

Appendix B: Investigation

Our initial investigations were derived from the current given BCMOS TrailRider Specifications and in-class introductions. These include the project problem, client needs, and current TrailRider specs and features. From this, we have summarized the first idea of the project scope. We delved into some research and found other devices with similar functions. These were the Grit chair and Joelette. These two devices gave us more ideas as to how our final project could function, such as implementing a ratchet and three wheels for stability.

An in-class client interview was done on September 11 where an abundance of questions, some of which our group have not thought of and were helpful, were answered. After these findings, we discussed as a group and generated a more concentrated scope for our project. We have concluded that our client, Eric, expressed a dire need in rider independence as 55% of riders did not go back because of guilt in their dependence on sherpas. Eric stated that BCMOS wishes to keep sherpa volunteers as it aligns with their vision. Eric also mentioned that frequent trails used were of class 1 urban trails. From there we developed our scope with the needs of rider-independence, sherpa involvement, and safety/stability at most importance.

We dedicated one meeting session to testing the current TrailRider. Each member took turns riding and driving the device. Some photos taken from the test ride are below in Figures 1 to 4. Our summarized findings of the current TrailRider from the test ride are:

- Quit mediocre footrest. There is not much variation in angle and space. It is in a weird basket-like form
- One sherpa is doable, but there are difficulties in rough terrain and sharp movements for stability
- Good portability, it is quite simple to fold in, but there is room for improvement (ie. there could be fewer buttons to push or components to take out)
- Decent turning radius, and ease in turning with the one wheel
- A satisfactory stand. Although, there are some trouble and safety concerns in engaging and disengaging the stand
- The material was light and strong
- Need more and better handles for carrying the device. (i.e. sherpas/search & rescue should be able to easily lift the chair with a person sitting in it)

These findings and concerns were kept in mind during concept generation and evaluation.

Figure 1

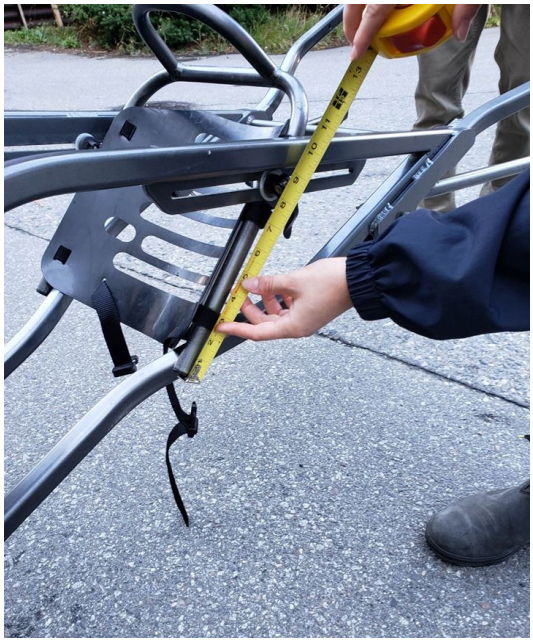

Figure 2

Figure 3

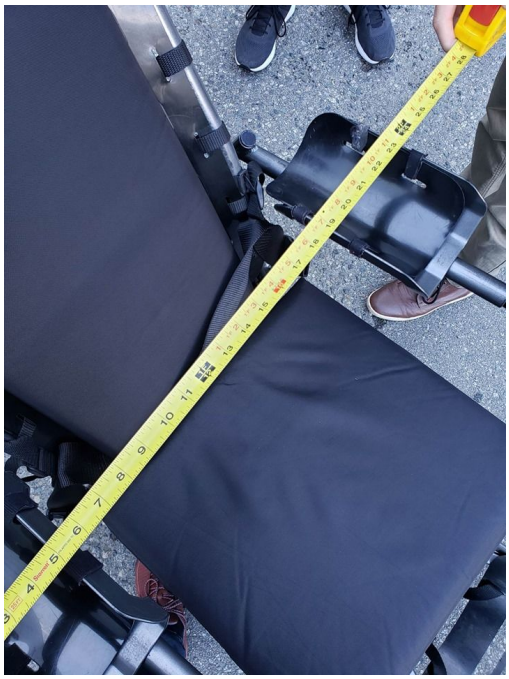

Figure 4

Appendix C: Literature Research

The current BCMOS trail rider information to parallel the below is in Appendix B. Little literature exists to substantiate the engineering design and objective comparables of these current options. The Sage Journal article noted in the links below and manufacturer websites provided the following information.

Chair institute currently sells both the GRIT “Freedom Chair” and ORC “Off-Road Wheelchair” both of which draw parallels to the current Trail Rider. The GRIT is sold in limited configurations whereas the ORC is customizable, and the prices reflect this. The GRIT uses a patented lever drive system on a conventional two-wheeled wheelchair design with a 3rd front wheel for stabilization. There is also the option to propel by pushing along the wheels similar to a conventional wheelchair or be pushed. All components are quick-release mountain bike parts that can be disassembled to fit in any vehicle. The major advantage of this design is its modularity and low cost ($3000USD). The ORC parallels the design of the GRIT and uses the same patents but far exceeds it in price to provide a higher resolution of fit and superior personalization.

A more similar unit to the current version 4.0 Trail Rider is the Joelette. It has comparable one-wheeled geometry, braking mechanism, and ergonomics. The portability, and carry system for the rear sherpa is ergonomically superior, and the unit when folded has far superior portability. The Joelette does not include a rider interaction system and has no registered patents in its single wheel configuration. There is a double wheel kit with registered patents that involve a gas suspension and a trailing wheel for stability. Currently, only the single wheel Joelette is available and is fully equipped near $4000USD.

Each of the Joelette variations (with one wheel, and with the double-wheel kit) and the GRIT (identical for these purposes to the ORC) are superior to the current Trail Rider for their intended usage. The GRIT excels in urban class one situations and enables rider involvement, and the Joelette provides an equivalent user experience to the Trail Rider but is more portable and has superior ergonomics. Both the Joelette ($3500-$4500USD), and the GRIT ($3000USD) greatly undercut the cost of the Trail Rider ($6500USD) as well. As such, the most economical way of improving the current Trail Rider may be to incorporate aspects of these superior market comparables.

Appendix C References

[1] https://www.gogrit.us/grit-freedom-chair-spartan-chair
[2] https://chairinstitute.com/grit-freedom-chair/
[3]http://www.joeletteandco.com/en/exclusive-manufacturer-of-the-joelette-all-terrain-chair/joelette-monoroue/#tab-1-2-technical-features
[4] https://journals.sagepub.com/doi/full/10.1177/1687814017730541
[5]https://chairinstitute.com/grit-freedom-chair/ (to determine weight and dimensions of GRIT)
[6]https://www.spinlife.com/en/wheelchairwheelchoices2.cfm (to determine wheel specifications)

Appendix D: Needs, Requirements and Evaluation Criteria

Below are iterations of our requirements and target specifications documents. Note the management section is collapsed as it encompasses items pertaining to the concept selection review. These documents are presented in reverse chronological order and represent meaningful progress instead of precise weekly intervals. Requirement document dates are September 22, October 6, and 28. Target Specifications document dates are September 9, 16, 22, and October 6. For context, the below stakeholders summary document summarizes the actual needs of major and minor stakeholders.

Stakeholder Summary

Ranked influence	1	2	3	4	5	6	7	8
Justification	Main client identified by class scope and professors	Group with direct interaction with device. They also have the most at stake in terms of safety	Has direct interaction with device. Desired group to include as per BCMOS's vision statement	May interact with device. Safety regulations and possibly rider's life on the line	Has indirect interaction with device but will possibly encounter during operation	Has indirect interaction with device, but affected from device operation aftermath	No interaction with operation of device. Decides if final product is doable	No interaction with device, but affected by regulations and laws
Stakeholder	**BCMOS**	**Rider**	**Sherpas**	**Search and Resc**	**Other hikers**	**Parks staff**	**Manufacturer**	**Government**
Needs (refer to target specifications document for detailed explanations)	low cost	comfort for long periods of sitting	small upward force required	aproporiate handles for ease in carrying	trail rider doesn't block the trail	less/no waste or debris from device for ease in maintaining trails	uses generic parts and manufacturing methods	no trail modification to accomodate custom trail riders
	easy to maintain	independance based on physical capability	as few sherpas as possible	not heavy for rescue in emergencies	safe for other hikers			no need for tax subsidies
	easy to transport, more portable	safe	small or roll/pitch forces required	easy to spot in emergencies				
		good visibility of the trail	forces exerted by sherpas don't oppose each other					
		easy to maintain						

Requirements [November 10, 2019]

ID	Category	Requirement	Metric		Acceptable Threshold			Justification
			Entity to be measured	Units	Min.	Max.	Y/N	
1	**Management**							
1.1	Management	A report that aligns with the provided rubric will be completed by November 15	Report completion				Y	Assigned by course administrators
1.2	Management	The team will be prepared for a concept selection review on October 10	Team preparedness				Y	Assigned by course administrators
1.3	Management	A presentation will be prepared that aligns with the provided rubric by November 20	Presentation completeness				Y	Assigned by course administrators
2	**Safety**							
2.1	Safety	The device is more resistant to tipping moments than the current design.	Stability				Y/N	The current design requires the sherpas to counter tipping moments, requiring the continuous involvement of two sherpa. If the device were to be more stable, this would result in increased rider safety and decreased sherpa effort.
2.2	Safety	The device includes a rider containment harness, seat belt, or equivalent system	Rider security				Y/N	The device requires some form of containment so that parpalegic riders do not fall out of or move around significantly within the chair.
2.3	Safety	The device is able to roll over obstacles with one wheel that are 30cm high without tipping	Allowable obstacle height	m	0.3			Tipping is a large safety concem. It is extremely likely that the chair will encounter situations where one wheel is elevated above the other, especially when a Sherpa is assisting in driving.
2.4	Safety	The device is able to elevate the front caster by 0.3m without tipping backward	Allowable caster lift	m	0.3			0.3m is minimum size for maneuverable obstacles (see above). The device may need to elevate the front casters higher than 0.3m, but in this case there will certainly be a sherpa in the back to stabalize the device. Therefore 0.3m is sufficient
2.5	Safety	The device has a mechanical breaking mechanism	Braking				Y/N	The device must be able to travel safely on class one trails that may involve non-level surfaces. For safety, the breaking system of a conventional wheelchair (the sherpa resisting gravity via the main handles, or the rider slowing down the wheels directly with their hands) is insufficient.
2.6	Safety	The drive system has a stress safety factor of at least 3	Stress safety factor	n/a	3			A common value based on Mech 325 knowledge
2.7	Safety	The drive system has a life-expectancy factor of at least 2	Life-expectancy factor	n/a	2			A common value based on Mech 325 knowledge
3	**Cost**							
3.1	Cost	The delivered cost shall not exceed 9000 canadian dollars.	Cost	CAD		9000		The average annual disposable income of disable people according to statistics Canada is approximately $9000. Intent to improve on the current offering of $7500.
4	**Storage + Handling**							
4.1	Storage + Handling	The device can be stored and transported within a personal vehicle.	Folded volume	m^3		0.9		Current TrailRider's folded volume is 172 cm x 82 cm x 61 cm = 0.860 m^3. Intent is to improve on this by decreasing the folded volume.
5	**Ergonomics**							
5.1	Ergonomics	The device comfortably seats a parpalegic rider for a minimum of 2 hours.	Rider comfort	Hours	2			95% of the trail rides are less than or up to 2 hours in duration, though less common longer hikes range up to 5 hours (accoridng to the client)
6	**Durability**							
6.1	Durability	The device has a predicted service life of at least 10 years with regular maintenance.	Service life	Years	10			The design must have no forseen major services required within a 10 year lifespan.
7	**Usability**							
7.1	Rider Usability	The device enables rider involvment towards propulsion.	Rider involvement				Y/N	Addresses the guilt component as only 45% of current riders become repeat clients, primarily due to feelings of guilt for not participating
7.2	Rider Usability	The device functions with less than 40W power input from the user	Power input	Watts		40		It is estimated that a healthy person can output approximately 40W with their arms over a one hour period. For the device to be useful to a rider, it must effectively propel with this power input.
7.3	Rider Usability	The device is able to reach its top speed in less than 5 seconds	Time to top speed	s		5		Anything greater than five seconds to reach the top speed would be inconvenient for the rider
7.4	Rider Usability	The device travels at least 1 m/s at its top speed	Top speed	m/s	1			1 m/s is a fairly slow walking speed

Requirements [October 28, 2019]

Category	Requirement	Metric		Acceptable Threshold			Justification
		Entity to be measured	Units	Min.	Max.	Y/N	
Management							
Safety							
Safety	The device is more resistant to tipping moments than the current design.	Stability				Y/N	The current design requires the sherpas to counter tipping moments, requiring the continuous involvement of two sherpa. If the device were to be more stable, this would result in increased rider safety and decreased sherpa effort.
Safety	The device includes a rider containment harness, seat belt, or equivalent system	Rider security				Y/N	The device requires some form of containment so that parpalegic riders do not fall out of or move around significantly within the chair.
Safety	The device is able to roll over obstacles with one wheel that are 20cm high without tipping	Allowable obstacle height	m	0.2			Tipping is a large safety concern. It is extremely likely that the chair will encounter situations where one wheel is elevated above the other, especially when a Sherpa is assisting in driving.
Safety	The device has a mechanical breaking mechanism	Breaking				Y/N	The device must be able to travel safely on class one trails that may involve non-level surfaces. For safety, the breaking system of a conventional wheelchair (the sherpa resisting gravity via the main handles, or the rider slowing down the wheels directly with their hands) is insufficient.
Cost							
Cost	The delivered cost shall not exceed 9000 canadian dollars.	Cost	CAD		9000		The average annual disposable income of disable people according to statistics Canada is approximately $9000. Intent to improve on the current offering of $7500.
Storage + Handling							
Storage + Handling	The device can be stored and transported within a personal vehicle.	Folded volume	m^3		0.9		Current TrailRider's folded volume is 172 cm x 82 cm x 61 cm = 0.860344 m^3. Intent is to improve on this by decreasing the folded volume.
Ergonomics							
Ergonomics	The device comfortably seats a parpalegic rider for a minimum of 2 hours.	Rider comfort	Hours	2			95% of the trail rides are less than or up to 2 hours in duration, though less common longer hikes range up to 5 hours (accoridng to the client)
Durability							
Durability	The device has a predicted service life of at least 10 years with regular maintenance.	Service life	Years	10			The design must have no forseen major services required within a 10 year lifespan.
Usability							
Rider Usability	The device enables rider involvment towards propulsion.	Rider involvement				Y/N	Addresses the guilt component as only 45% of current riders become repeat clients, primarily due to feelings of guilt for not participating

Requirements [October 6, 2019]

Category	Requirement	Metric		Acceptable Threshold			Justification
		Entity to be measured	Units	Min.	Max.	Y/N	
Management							
Safety							
Safety	The device is more resistant to tipping moments than the current design.	Stability				Y/N	The current design requires the sherpas to counter tipping moments, requiring the continuous involvement of two sherpa. If the device were to be more stable, this would result in increased rider safety and decreased sherpa effort.
Safety	The device includes a rider containment harness, seat belt, or equivalent system	Rider security				Y/N	The device requires some form of containment so that parpalegic riders do not fall out of or move around significantly within the chair.
Safety	The device has a mechanical breaking mechanism	Breaking				Y/N	The device must be able to travel safely on class one trails that may involve non-level surfaces. For safety, the breaking system of a conventional wheelchair (the sherpa resisting gravity via the main handles, or the rider slowing down the wheels directly with their hands) is insufficient.
Cost							
Cost	The delivered cost shall not exceed 9000 canadian dollars.	Cost	CAD		9000		The average annual disposable income of disable people according to statistics Canada is approximately $9000. Intent to improve on the current offering of $7500.
Storage + Handling							
Storage + Handling	The device can be stored and transported within a personal vehicle.	Folded volume	m^3		0.9		Current TrailRider's folded volume is 172 cm x 82 cm x 61 cm = 0.860344 m^3. Intent is to improve on this by decreasing the folded volume.
Ergonomics							
Ergonomics	The device comfortably seats a parpalegic rider for a minimum of 2 hours.	Rider comfort	Hours	2			95% of the trail rides are less than or up to 2 hours in duration, though less common longer hikes range up to 5 hours (accoridng to the client)
Durability							
Durability	The device has a predicted service life of at least 10 years with regular maintenance.	Service life	Years	10			The design must have no forseen major services required within a 10 year lifespan.
Usability							
Rider Usability	The device enables rider involvment towards propulsion.	Rider involvement				Y/N	Addresses the guilt component as only 45% of current riders become repeat clients, primarily due to feelings of guilt for not participating

Requirements [September 22, 2019]

Category	Requirement	Metric		Acceptable Threshold			Justification
		Entity to be measured	Units	Min.	Max.	Y/N	
Management							
Safety							
Safety	The device is less prone to tipping than the current TrailRider	Survey of how safe the trail rider feels.	0-10	0	10		Since we lack the time and resources to do proper analysis on tipping, impact force, etc, we can just survey group members for score. If we can come up with a more quantitative metric later on, we can use that as well.
Cost							
Cost	The total cost of the TrailRider will be less than $9000 CAD	Cost	CAD	0	9000		Average annual disposable income of disabled people is approximately $9000. While the current $7500 is not the worst, it can be improved.
Storage + Handling							
Storage + Handling	The device can fit inside of a van when it is not in use	Transportation volume	m^3	0	1.7		Current TrailRider's folded volume is 172 cm x 82 cm x 61 cm = 0.860344 m^3. Assume that folded geometries are standard (ex: no infinitely thin cylinder). We used volume instead of vehicle class because many disabled people rely on public transport, which has more variation and does not have clearly defined vehicle classes. We can also define a cap for a specific dimension need later if needed (ex: to fit an ambulance, to fit common cars, etc).
Ergonomics							
Ergonomics	A rider is able to sit comfortably on the TrailRider for at least 2 hours	Rider comfort time	Hours	2	N/A		2 hours is the time for their short trails, while 5 hours is an estimate for what their longer trails would take.
Durability							
Durability	Device has a predicted service life of at least 10 years	Service life	Years	10	N/A		A good measure of durability is how much it needs to be serviced. Once we generated concepts, we would have a better idea on identifying weak points, or we can have something for an expert to look at and help us evaluate.
Rider useability							
Rider useability							

Target Specifications [October 6, 2019]

		Needs				Evaluation Criteria					
Rank	Rank Justification	Needs Category	Expressed Need	Interpretation	Need Statement	Metric		Acceptable Threshold			
		Category				Entity to be measured	Units	Min	Max	Y/N	WDM Item
1	Team concensus of priorities following presentation given by BCMOS representative.	**Safety**	"Make it safer"	A device that can be safely managed on class one terrain with less involvement from sherpa would be resistant to tipping or rolling over	**The device resists tipping moments and is stable on class one terrain.**	**Number of sherpa required to redundantly maintain device stability on class one terrain (less is better)**	**Count**	**0**	**2+**		**1. Sherpas required**
2	Team concensus of priorities following presentation given by BCMOS representative	**Interaction**	"More rider interaction"	A device that enables rider involvement will result in less rider guilt and more return clients.	**The device enables active rider involvement towards propulsion.**	**Mechanical efficiency of rider input.**	**%**	**0**	**100**		**2. Mech. Eff. from Rider**
3	Team concensus of priorities following presentation given by BCMOS representative.	**Sherpa usability (Input constraint)**	"Make the device usable by a single "Sherpa" "/"Make it lighter"	A lightweight device or a device that includes a mechanical advantage towards propulsion would decrease the required power input of the rider and sherpa. The current device requires two sherpsa. Intent is to lower this to 1.	**The device is operational on class one terrain with less required sherpa input than the current model.**	**Number of sherpa required for propulsion on class one terrain**	**Count**	**1**	**2+**		**1. Sherpas required**
4	First hand account with BCMOS. They prioritize usability and customer satisfaction, and mentioned that this would be part of a '5 year plan', so fundraising is always an option.	**Cost (Undesireable)**	"Reduce production cost"	A cost competitive option will be affordable for a larger demographic of rider. The average annual disposable income of disable people is approximately $9000. Intent to improve on the current offering of $7500.	**The device is priced competitively to similair market offerings.**	**Delivered cost to user**	**CAD**	**0**	**$9,000**		**4. Cost**
5	A current limitation to the number of riders involved in BCMOS events pertains both to the number of Trail Riders in stock and the number of drivers available. Though a more portable device would enable more devices to be shuttled around in a given vehicle, but participation could also be increased by finding more volunteers. As such, portability is not considered one of the three primary needs. Most reasonable designs could be modified at later stages to decouple or become more portable.	Portability (Storage and handling)	"Improve the device's portability"	A more portable device will be used more often. The current trail rider folded volume is 172 cm x 82 cm x 61 cm = 0.860344 m^3	The device folds or collapses and can be transported in passenger vehicles.	Folded Volume	m^3	0	0.86		5. Portability
6	Component durability can be addressed at later stages during the design process as all reasonable designs are expected to have components that can be reasonably optimized. In parallel we will ensure the frame remains as durable as the current version.	Durability	"Make it stronger"	Any mechanical components sourced off the shelf such as bike components will require some maintenance i.e. tightening of brake cables, pad replacements, tire replacements etc. No significant maintenance is expected i.e. replacing wheels, frame, etc. during 10 year design life span.	The device maintenance is predictable and comparable to a bicycle for a 10 year life span.	Complexity of mechanical systems and number of moving mechanical parts.	Refer to WDM rating meanings				6. Durability
7	BCMOS usually travels along urban trails, where the paths are relatively well maintained. Although it would be nice to have a device that can maneouver more easily on harder terrain, the scope of this project remains to be urban trails. Also, this is indirectly represented in the portability category.	Ergonomics	"Make it smaller"	A more compact device is more manageable on trails for sherpa and riders.	The devices maneuverability around corners and tight terrain exceeds that of the current design.	*Weighted percent improvement summation of turning radius and width*	*%*	*0*	*100*		*~5 (not directly)*
8	Currently the rider becomes sore after long periods of time. It would be preferable to make a more comfortable ride, but is less of a priority when compared to the higher ranked items.	Rider usability (Output constraint)	"Make the device more comfortable for the rider"	Most of the trail rides are less than or up to 2 hours in duration, though less common (due to required washroom breaks etc.) longer hikes range up to 5 hours.	The device comfortably seats paraplegic riders on class one terrain.	Time on the trail rider while remaining comfortable/not creating sore spots.	Hours	2	5		3. Rider Comfort
9	While search and rescue compatability is most important for harder terrain, our scope focuses on urban trails where access is more available.	Regulatory	"Make the device Search And Rescue compatible"		The devide is compatible with typical search and rescue operations on class one terrain.	*Device fits within standard ambulance and elevator dimensions*	*Fits planform (topview) dimensions 2010 mm x 610 mm*			*Y/N*	*~5 (not directly)*

Target Specifications [September 22, 2019]

		Needs				Evaluation Criteria					
Rank	Justification	Needs	Need as	Explanatory Notes	Need Statement	Metric		Acceptable Threshold			Justification
						Entity to be measured	Units	Minimum	Maximum	Y/N	
1	Team concensus of priorities following presentation given by BCMOS representative.	Safety	"Make it safer"	Safety is a prioirty for the person with disabilities, or else they will not use the device. Tipping is the primary risk associated with using the device	The device is less prone to tipping than the current design.	Survey of how safe the trail rider feels.	0-10	0	10		Since we lack the time and resources to do proper analysis on tipping, impact force, etc, we can just survey group members for score. If we can come up with a more quantitative metric later on, we can use that as well.
6	BCMOS usually travels along urban trails, where the paths are relatively well maintained. Although it would be nice to have a device that can maneouver more easily on harder terrain, the scope of this project remains to be urban trails.	Ergonomics	"Make it smaller"	A more compact device is more likely to be bought and used more frequently.	The device is more maneuverable around corners and on narrow paths.	Percent improvement summation of turning radius and width	%	0	100		Main ergonomic component in a trail is how easy it is to navigate turns. Current TrailRider serves as a good benchmark.
8	Component durability can be addressed at later stages during the design process as all reasonable designs are expected to have components that can be reasonably optimized. In parallel we will ensure the frame remains as durable as the current version.	Durability	"Make it stronger"	The device's components must require only minimal maintenance and replacement. Device must have longer lifespan.	The design addresses weak points of the current design such as to minimize non-standard maintenance and failure.	Device has expected service life of minimum 10 years, minimal service required, no major service expected during that period	Subjective scoring to be refined during later stages	0	100		A good measure of durability is how much it needs to be serviced. Once we generated concepts, we would have a better idea on identifying weak points, or we can have something for an expert to look at and help us evaluate.
4	A current limitation to the number of riders involved in BCMOS events pertains both to the number of Trail Riders in stock and the number of drivers available. Though a more portable device would enable more devices to be shuttled around in a given vehicle, but participation could also be increased by finding more volunteers. As such, portability is not considered one of the three primary needs. Most reasonable designs could be modified at later stages to decouple or become more portable.	Portability	"Improve the device's portability"	A more portable device will be used more often.	The device is easy to transport. It fits inside BCMOS truck or ideally on public transport.	Portability / Folded Volume	m^3	0	0.86		Current TrailRider's folded volume is 172 cm x 82 cm x 61 cm = 0.860344 m^3
10	First hand account with BCMOS. They prioritize usability and customer satisfaction, and mentioned that this would be part of a '5 year plan', so fundraising is always an option.	Cost	"Reduce production cost"	A cheaper device will be more accessible to people in the market.	The device considers cost savings compared to the current Trail Rider, making it more affordable and comparble to other market offerings	Delivered cost to user (eligible for tax credit)	CAD	0	$9,000		Average annual disposable income of disable people is approximately $9000. Intent to improve on the current offering of $7500.
2	Team concensus of priorities following presentation given by BCMOS representative	Interaction	"More rider interaction"	A person with disabilities seeks independence and will be more happy to do most of the work themselves.	The rider has more independence in using the device.	Provides adjustment and involvement in the form of breaks, reclining seat, etc.	Number of meaningfully adjustable parameters	0	4		The more adjustable the seat is, the more interactive the trail rider can feel. We arbitrarily cap it at 4, but if there's a design that has more adjustable parameters, we can modify this later on.
9	Robustness of device is not as important in this initial design because parts could be swapped for better quality ones in the future. What is important is that the overall frame is robust and will not break down from dirt /exposure.	Robustness	"Improve the device's ability to withstand exposure to water and dirt"	A device that is robust in all weather conditions will be used with more trails and seasons.	The device remains in quality shape after long exposure to wet and dirty conditions.	Resistance to rust, number of moving parts requiring service	Subjective scoring	0	4		Once we generate concepts, we'll have a better idea of how to quantify parts resistance.
3	Team concensus of priorities following presentation given by BCMOS representative.	Sherpa usability	"Make the device usable by a single "Sherpa" "/"Make it lighter"	The need for only a single Sherpa is desirable because it is easier to schedule hikes with less people. A lightweight device is one way to reduce fatigue for the Sherpas and the rider, and make the trail rider more usable.	The device can be used by a single Sherpa.	Number of helpers required	one (3), two (2), three or more (1)	1	3		Current TrailRider uses 2 people, so 1 worse would be maximum, and symmetrically 1 better would be minimum.
7	While search and rescue compatability is most important for harder terrain, our scope focuses on urban trails where access is more available.	Regulatory	"Make the device Search And Rescue compatible"	Also important to safety, in the case of emergencies the hikers must be found and carried quickly.	The devide is compatible with search and rescue requirements.	Device fits within standard ambulance and elevator dimensions	Fits planform (topview) dimensions 2010 mm x 610 mm			Fits planform or not	The size is standard for emergency rescue planform in Canada.
5	Currently the rider becomes sore after long periods of time. It would be preferable to make a more comfortable ride, but is less of a priority when compared to the higher ranked items.	Rider usability	"Make the device more comfortable for the rider"	A typical ride is ~2 hours, but could be >4 hours. Quadraplegics are unable to adjust themselves within the chair, whereas paraplegics can. Also the need for bathroom breaks is a concern	The device comfortably seats paraplegic riders for at least 2 hours (their short rides).	Time on the trail rider while remaining comfortable/not creating sore spots.	Hours	2	5		2 hours is the time for their short trails, while 5 hours is an estimate for what their longer trails would take.

Target Specifications [September 16, 2019]

		Needs				Requirements					
Rank	Justification	Needs	Need as expressed	Explanatory Notes	Need Statement	Metric		Acceptable Threshold			Justification
						Entity to be measured	Units	Minimum	Maximum	Y/N	
1	Team concensus of priorities following presentation given by BCMOS representative.	Safety	"Make it safer"	Safety is a prioirty for the person with disabilities, or else they will not use the device. Tipping is the primary risk associated with using the device	The device should be less prone to tipping than the current design.	Survey of how safe the trail rider feels.	0-10	0	10		Since we lack the time and resources to do proper analysis on tipping, impact force, etc, we can just survey group members for score. If we can come up with a more quantitative metric later on, we can use that as well.
6	BCMOS usually travels along urban trails, where the paths are relatively well maintained. Although it would be nice to have a device that can maneouver more easily on harder terrain, the scope of this project remains to be urban trails.	Ergonomics	"Make it smaller"	A more compact device is more likely to be bought and used more frequently.	The device should be more maneuverable around corners and on narrow paths.	Percent improvement summation of turning radius and width	%	0	100		Main ergonomic component in a trail is how easy it is to navigate turns. Current TrailRider serves as a good benchmark.
8	Component durability can be addressed at later stages during the design process as all reasonable designs are expected to have components that can be reasonably optimized. In parallel we will ensure the frame remains as durable as the current version.	Durability	"Make it stronger"	The device's components must require only minimal maintenance and replacement. Device must have longer lifespan.	The design should address weak points of the current design such as to minimize non-standard maintenance and failure.	Device has expected service life of minimum 10 years, minimal service required, no major service expected during that period	Subjective scoring to be refined during later stages	0	100		A good measure of durability is how much it needs to be serviced. Once we generated concepts, we would have a better idea on identifying weak points, or we can have something for an expert to look at and help us evaluate.
4	A current limitation to the number of riders involved in BCMOS events pertains both to the number of Trail Riders in stock and the number of drivers available. Though a more portable device would enable more devices to be shuttled around in a given vehicle, but participation could also be increased by finding more volunteers. As such, portability is not considered one of the three primary needs. Most reasonable designs could be modified at later stages to decouple or become more portable.	Portability	"Improve the device's portability"	A more portable device will be used more often.	The device should be easy to transport. Must be able to fit inside BCMOS truck or ideally on public transport.	Folded volume	m^3	0	0.86		Current TrailRider's folded volume is 172 cm x 82 cm x 61 cm = 0.860344 m^3. Assume that folded geometries are standard (ex: no infinitely thin cylinder). We used volume instead of vehicle class because many disabled people rely on public transport, which has more variation and does not have clearly defined vehicle classes. We can also define a cap for a specific dimension need later if needed (ex: to fit an ambulance, to fit common cars, etc).
10	First hand account with BCMOS. They prioritize usability and customer satisfaction, and mentioned that this would be part of a '5 year plan', so fundraising is always an option.	Cost	"Reduce production cost"	A cheaper device will be more accessible to people in the market.	The device should consider cost savings as compared to the current Trail Rider to make it more affordable and comparble to other market offerings	Delivered cost to user (eligible for tax credit)	CAD	0	$9,000		Average annual disposable income of disable people is approximately $9000. While the current $7500 is not the worst, it can be improved.
2	Team concensus of priorities following presentation given by BCMOS representative	Interaction	"More rider interaction"	A person with disabilities seeks independence and will be more happy to do most of the work themselves.	The rider should have more independence in using the device.	Provides adjustment and involvement in the form of breaks, reclining seat, etc.	Number of meaningfully adjustable parameters	0	4		The more adjustable the seat is, the more interactive the trail rider can feel. We arbitrarily cap it at 4, but if there's a design that has more adjustable parameters, we can modify this later on.
9	Robustness of device is not as important in this initial design because parts could be swapped for better quality ones in the future. What is important is that the overall frame is robust and will not break down from dirt /exposure.	Robustness	"Improve the device's ability to withstand exposure to water and dirt"	A device that is robust in all weather conditions will be used with more trails and seasons.	The device should remain in quality shape after long exposure to wet and dirty conditions.	Resistance to rust, number of moving parts requiring service	Subjective scoring	0	4		Once we generate concepts, we'll have a better idea of how to quantify parts resistance.
3	Team concensus of priorities following presentation given by BCMOS representative.	Sherpa usability	"Make the device usable by a single "Sherpa" "/"Make it lighter"	The need for only a single Sherpa is desirable because it is easier to schedule hikes with less people. A lightweight device is one way to reduce fatigue for the Sherpas and the rider, and make the trail rider more usable.	The device should be able to be used by a single Sherpa.	Number of helpers required	one (3), two (2), three or more (1)	1	3		Current TrailRider uses 2 people, so 1 worse would be maximum, and symmetrically 1 better would be minimum.
7	While search and rescue compatability is most important for harder terrain, our scope focuses on urban trails where access is more available.	Regulatory	"Make the device Search And Rescue compatible"	Also important to safety, in the case of emergencies the hikers must be found and carried quickly.	The device should be easily accessible by Search and Rescue members.	Device fits within standard ambulance and elevator dimensions	Fits planform (topview) dimensions 2010 mm x 610 mm			Fits planform or not	The size is standard for emergency rescue planform in Canada.
5	Currently the rider becomes sore after long periods of time. It would be preferable to make a more comfortable ride, but is less of a priority when compared to the higher ranked items.	Rider usability	"Make the device more comfortable for the rider"	A typical ride is ~2 hours, but could be >4 hours. Quadraplegics are unable to adjust themselves within the chair, whereas paraplegics can. Also the need for bathroom breaks is a concern	The device should be able to comfortably seat paraplegic riders for at least 2 hours (their short rides).	Time on the trail rider while remaining comfortable/not creating sore spots.	Hours	2	5		2 hours is the time for their short trails, while 5 hours is an estimate for what their longer trails would take.

Target Specifications [September 9, 2019]

Needs				Requirements					
Needs Category	Need as expressed	Explanatory Notes	Need Statement	Metric		Acceptable Threshold			Justification
				Entity to be measured	Units	Minimum	Maximum	Y/N	
Safety	"Make it safer"	Safety is a prioirty for the person with disabilities, or else they will not use the device.	The device must be safer than the current design.	Rider can be left unattended (unit does not tip), unit is stable on moderate lateral slopes up to 15 degrees	2 points for being unattended, 1 more for each 5 degrees of lateral slope withstandable before requiring intervention	0	5		A main safety concern of trail rider is tipping, so using tipping as the main safety metric is acceptable. The basic ideas of the score are from the quality of what makes a tip. While score numbers are somewhat arbitrary, they can be changed later on.
Ergonomics	"Make it smaller"	A more compact device is more likely to be bought and used more frequently.	The device must be smaller than the current design.	Percent improvement summation of turning radius and width	%	0	100		Main ergonomic component in a trail is how easy it is to navigate turns. Current TrailRider serves as a good benchmark.
Durability	"Make it stronger"	A device must be able to withstand heavy people and impacts (such as falling)	The device must be stronger than the current design.	Device has expected service life of minimum 10 years, minimal service required, no major service expected during that period	Subjective scoring to be refined during later stages	0	100		A good measure of durability is how much it needs to be serviced. Once we generated concepts, we would have a better idea on identifying weak points, or we can have something for an expert to look at and help us evaluate.
Weight	"Make it lighter"	A lightweight device less human fatigue for the Sherpas and the rider.	The device must be lighter than the current design.	Percent weight savings compared to previous model	kg	0	23		Current Trail Rider is 23 kg. We use that as maximum acceptable threshold, and any improvements to it is better.
Portability	"Improve the device's portability"	A more portable device will be used more often,	The device must be easy to transport.	Folded volume	m^3	0	0.86		Current TrailRider's folded volume is 172 cm x 82 cm x 61 cm = 0.860344 m^3. Assume that folded geometries are standard (ex: no infinitely thin cylinder). We used volume instead of vehicle class because many disabled people rely on public transport, which has more variation and does not have clearly defined vehicle classes. We can also define a cap for a specific dimension need later if needed (ex: to fit an ambulance, to fit common cars, etc).
Cost	"Reduce production cost"	A cheaper device will be more accessible to people in the market.	The device must have a lower production cost.	Delivered cost to user (eligible for tax credit)	CAD	0	$9,000		Average annual disposable income of disable people is approximately $9000. While the current $7500 is not the worst, it can be improved.
Interaction	"More rider interaction"	A person with disabilities seeks independence and will be more happy to do most of the work themselves.	The rider must have more independence in using the device.	Provides adjustment and involvement in the form of breaks, reclining seat, etc.	Number of meaningfully adjustable parameters	0	4		The more adjustable the seat is, the more interactive the trail rider can feel. We arbitrarily cap it at 4, but if there's a design that has more adjustable parameters, we can modify this later on.
Robust	"Improve the device's ability to withstand exposure to water and dirt"	A device that is robust in all weather conditions will be used with more trails and seasons.	The device must remain in quality shape after long exposure to wet and dirty conditions.	Resistance to rust, number of moving parts requiring service	Subjective scoring	0	4		Once we generate concepts, we'll have a better idea of how to quantify parts resistance.
Usage	"Make the device usable by a single "Sherpa" "	The need for only a single Sherpa is desirable because it is easier to schedule hikes with less people.	The device must be able to be used by a single Sherpa.	Number of helpers required	one (3), two (2), three or more (1)	1	3		Current TrailRider uses 2 people, so 1 worse would be maximum, and symmetrically 1 better would be minimum.
Regulatory	"Make the device Search And Rescue compatible"	Also important to safety, in the case of emergencies the hikers must be found and carried quickly.	The device must be easily accessible by Search and Rescue members.	Device fits within standard ambulance and elevator dimensions	Fits planform (topview) dimensions 2010 mm x 610 mm			Fits planform or not	The size is standard for emergency rescue planform in Canada.

Appendix E: Concept Development and Selection

Function Decomposition

We identified the top level functions that the wheelchair must be able to do:

- Device enables rider input towards propulsion
- Device accepts input from sherpa
- Device absorbs bumps
- Device supports rider
- Device changes speed relative to ground
- Device changes direction relative to ground
- Device balances upright

Concept Fragments

After several rounds of c-sketching, we came up with concept fragments for the three most determinative functions:

(1) The device enables rider input towards propulsion
(2) The device accepts input from Sherpas
(3) The device absorbs shock

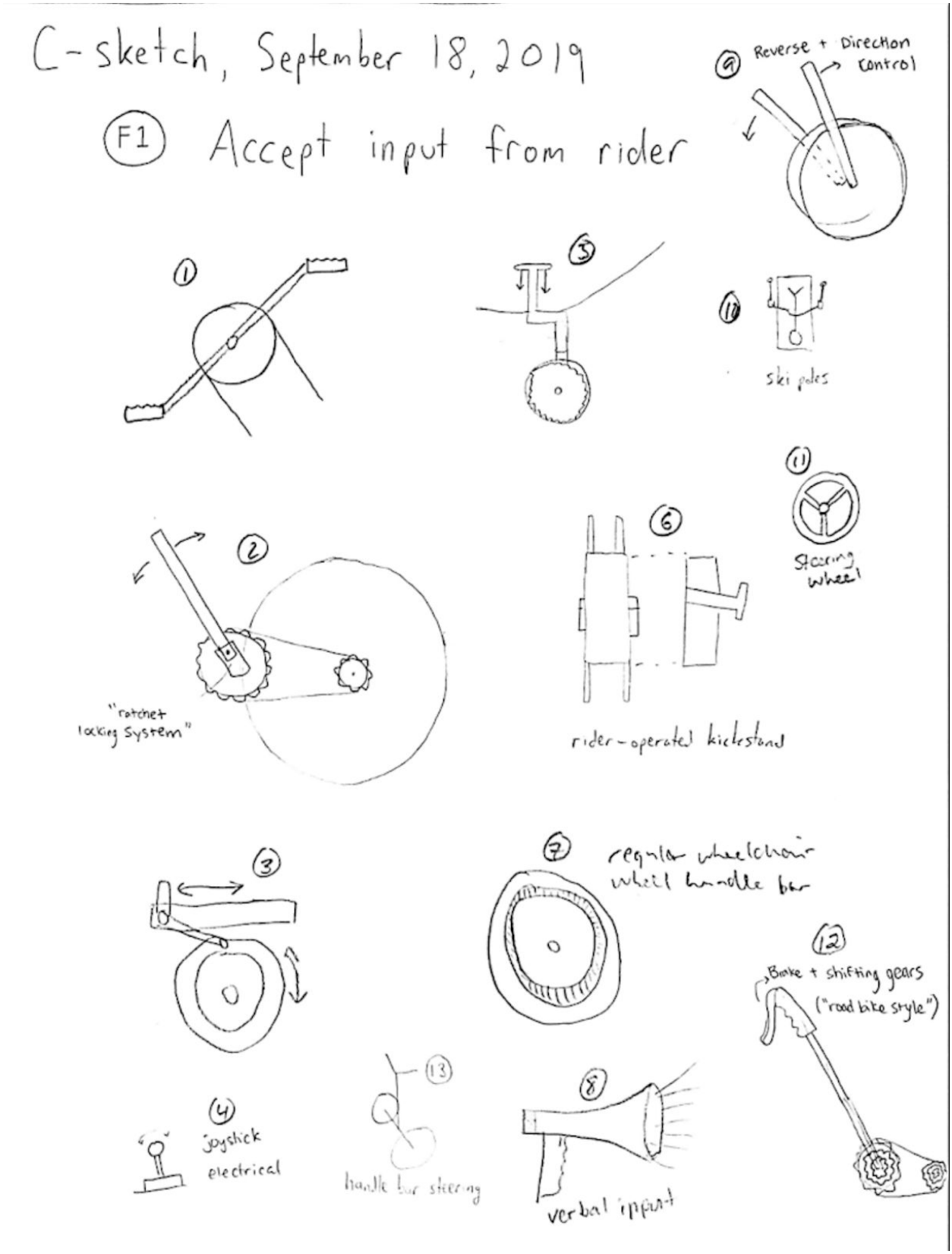

Figure 1: Concept Fragments for Function 1 (Part 1/2)

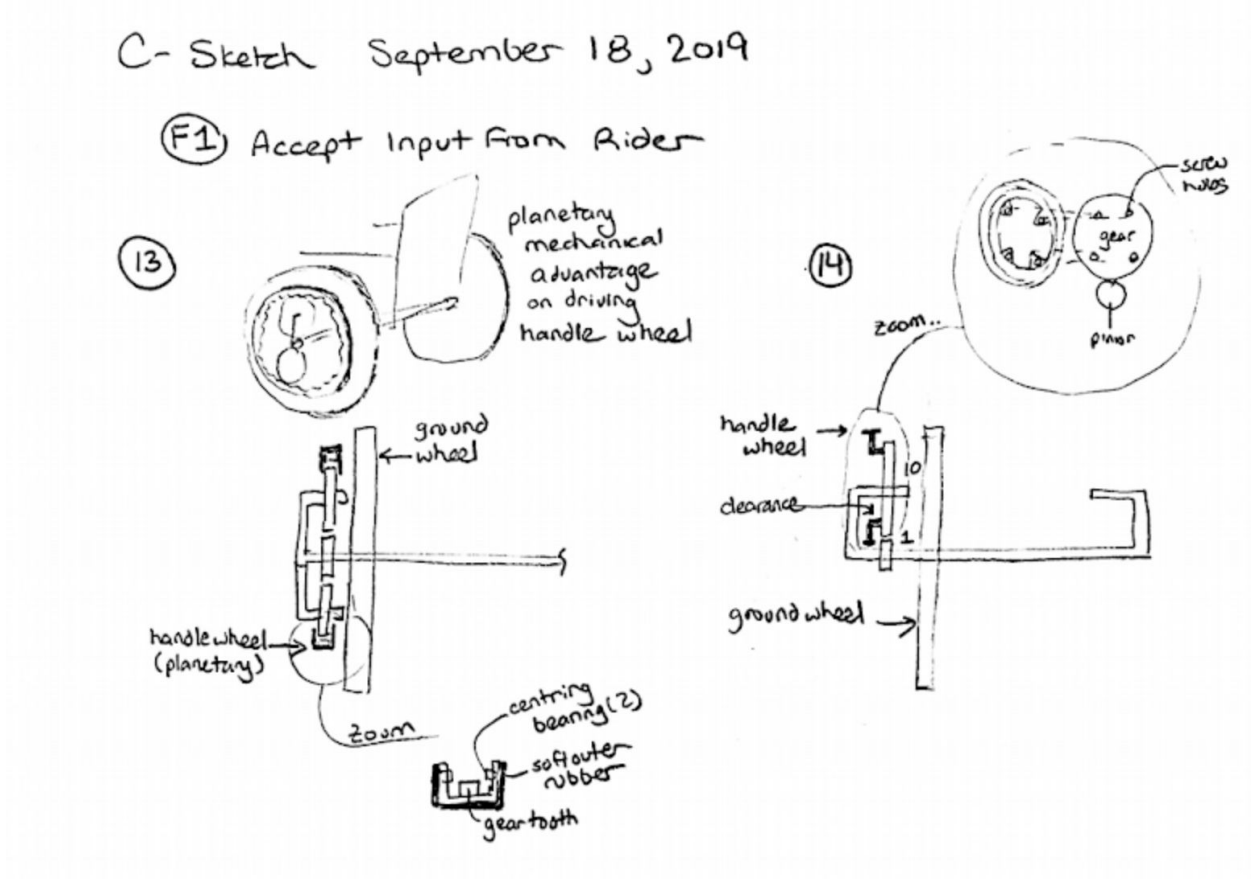

Figure 2: Concept Fragments for Function 1 (Part 2/2)

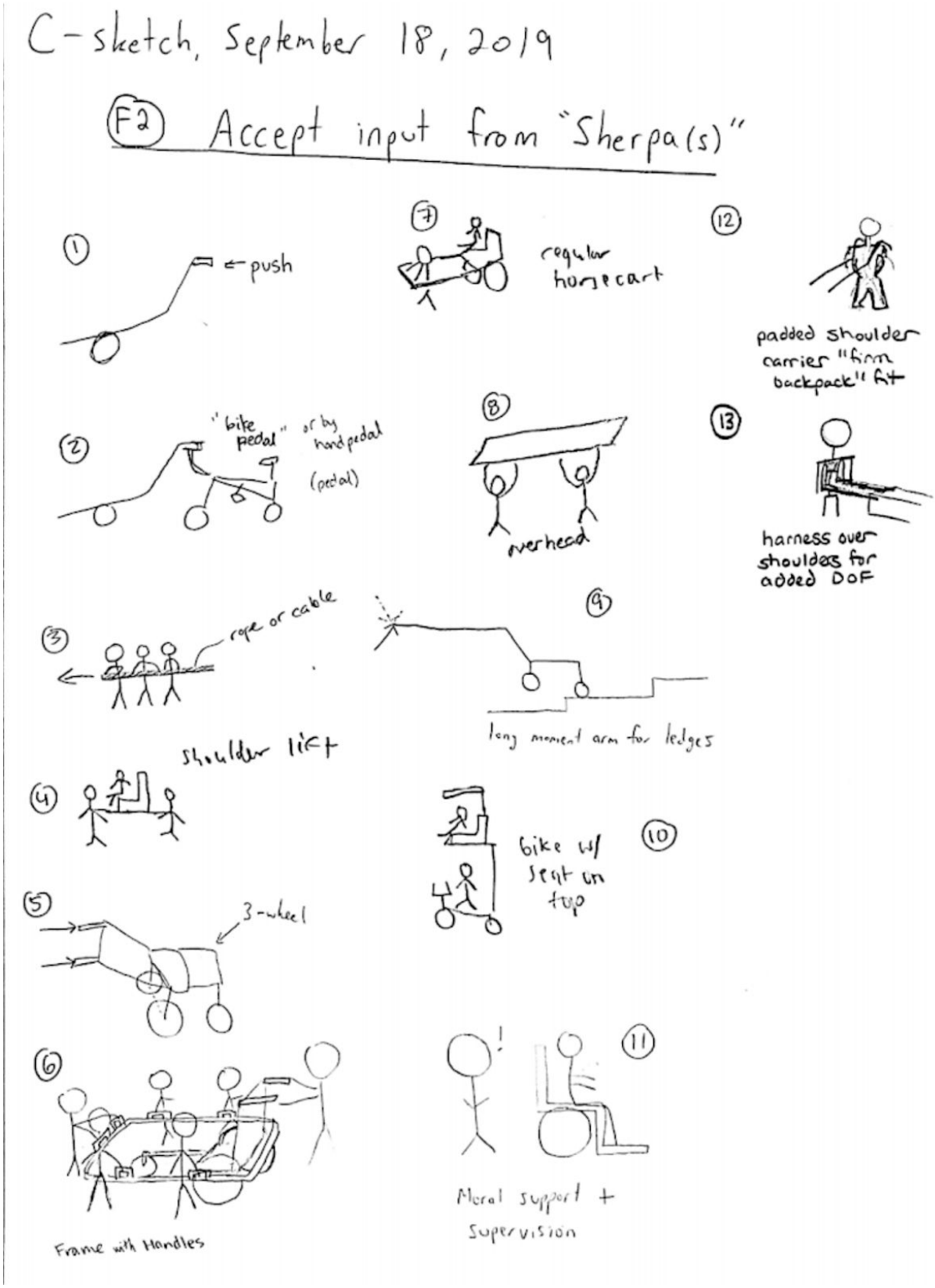

Figure 3: Concept Fragments for Function 2

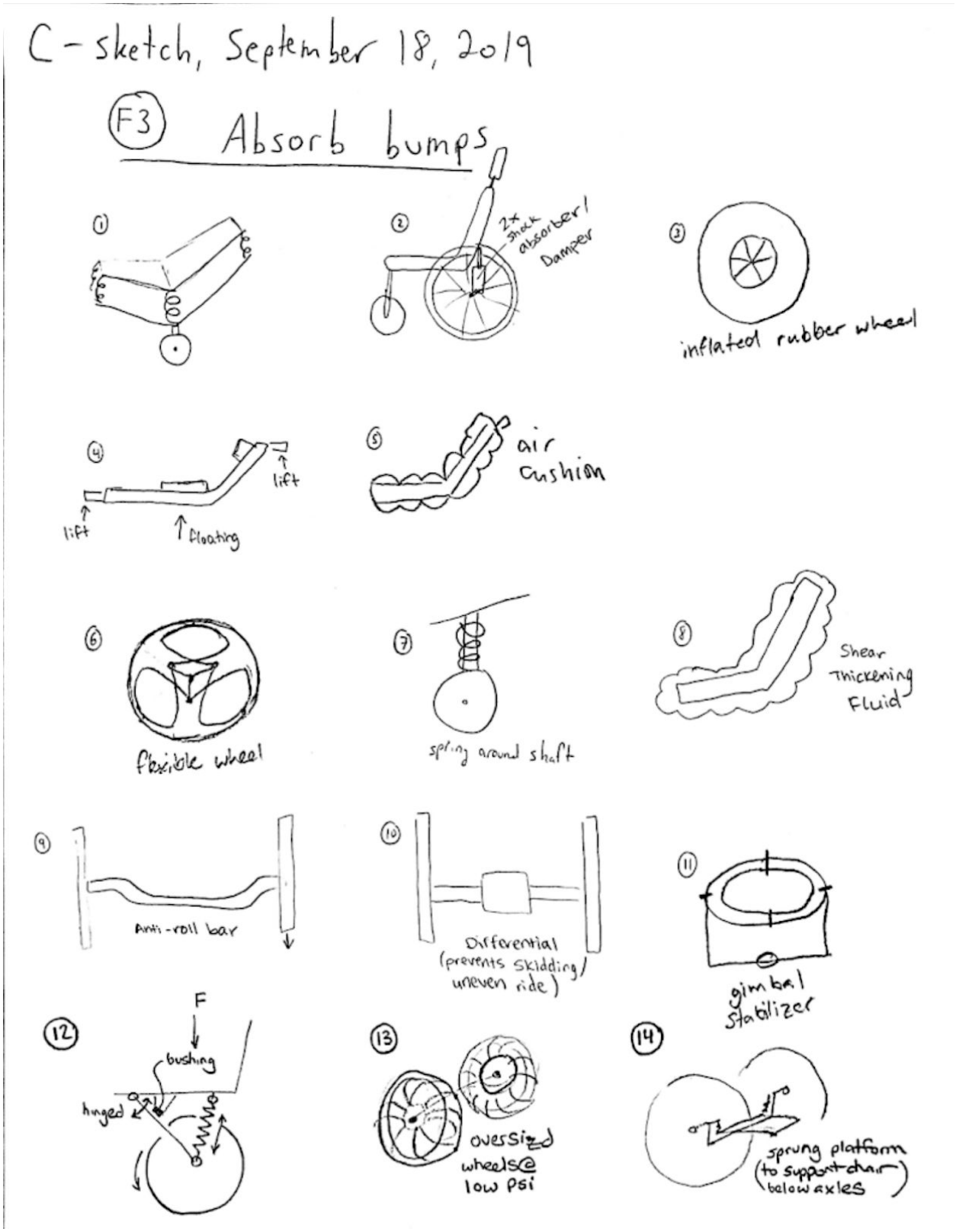

Figure 4: Concept Fragments for Function 3

Concept Fragment Ranking and Compatibility Issues

Table 1: Concept Fragment Ranking and Compatibility Issues

Function	Concept	Rank	Justification	Compatibility Issues
The device enables rider input towards propulsion	**Lever propulsion with one-way bearing (2 levers operating each wheel independently)**	**1**	Lever allows for variable moment arm based on arm position. Based on research, it proves to have greater efficiency than handrim and hand pedal propulsion.	Only compatible with two driven wheels
	Hand-rim propulsion	4	Proved to be the least efficient of all methods.	Only compatible with two driven wheels
	2 independent hand pedals driving each wheel through chain and gears.	2	Hand pedals are more efficient and less straining over long distance than hand-rim propulsion. Less favorable than lever propulsion because of complexity of design and patent issues.	Only compatible with two driven wheels
	1 set of hand pedals attached to a solid axle through chain and gears	3	Solid axle drive is less favorable because steering input is removed from rider.	Only compatible with one driven wheel
The device accepts input from Sherpas	Extending front rods with handles and integrated shoulder/hip harness	2	Harness provides degree of freedom and reduces back strain, though results in a potentially more complex system than necessary for project scope	Compatible with any conceivable drivetrain
	Push handles at rear as for standard wheelchair	**1**	Simplest, most convential design that requires no learning curve.	Compatible with any conceivable drivetrain
	Extending front rods with handles	3	More strain on the sherpa than rods with a harness.	Compatible with any conceivable drivetrain
The device aborbs shock	Bike wheels inflated with sidewall to absorb shock	2	Simplest option and provides damping similar to a soft bike tire, though still fairly limited in shock absoption. More desirable than air cushion since rough terrain wheels also contribute to increased life of product.	Compatible with any conceivable drivetrain
	Spring and damper on drivetrain	**1**	Most common method of damping vibrations though potentially more complex than necessary for project scope	Not compatible with rider involvement requirement as would require complex drivetrain isolation such as a degree of freedom between the chair and a pedal or lever based propulsion system
	Air cushion or fitted foam compatible with each rider	3	Least amount of shock absorption . The decision between an air cushion or foam fitted seat can be made later in detailed design process.	Compatible with any conceivable drivetrain and other forms of shock absorbtion.

Full Concepts

Combining concept fragments, we developed twelve full concepts. Below is a summary of the concept fragments in each one.

Table 2: Fragments of Full Concepts

Concept	Accept input from rider	Accept input from Sherpas	Absorb bumps
1	Hand pedals	Push	Seat springs
2	Ratchet locking system	Bike	Shock absorber/damper
3	Handpull	Rope	Rubber wheel
4	Joystick	Shoulder lift	Floating/Lift
5	Push/Pump	3 wheel	Air cushion
6	Kickstand by rider	Frame with handles	Flexible wheel
7	Regular wheelchair	Pull/horsecart	Shaft spring
8	Verbal input	Overhead	Shear thickening fluid
9	Ratchet w/ reverse & direction control	Long arm	Anti-roll bar
10		Bike w/ seat on top	Differential
11	Steering wheel	Moral Support/Supervision	Gimbal
12	Brake and Shifting gears (road bike)	Shooulder carrier/Backpack	Hinge+spring

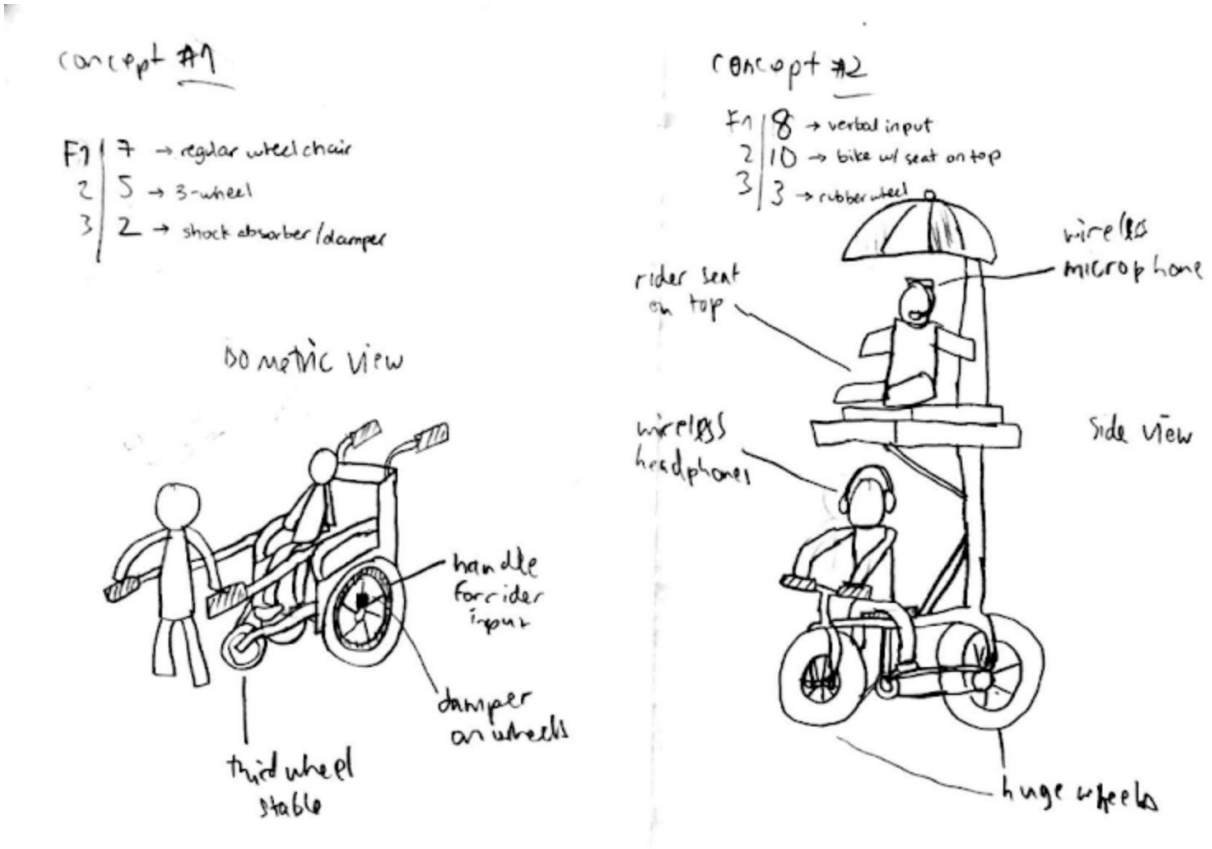

Figure 5: Full Concepts 1 and 2

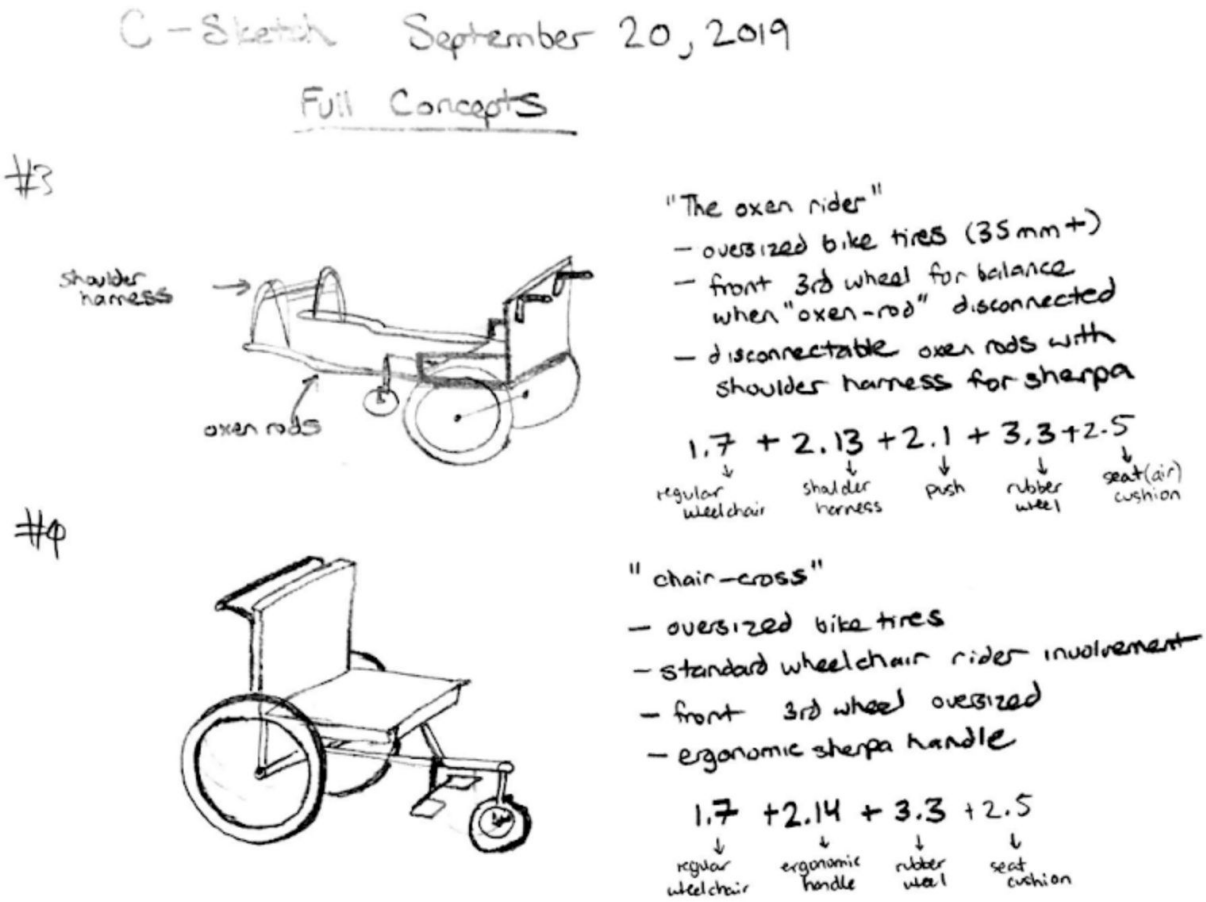

Figure 6: Full Concepts 3 and 4

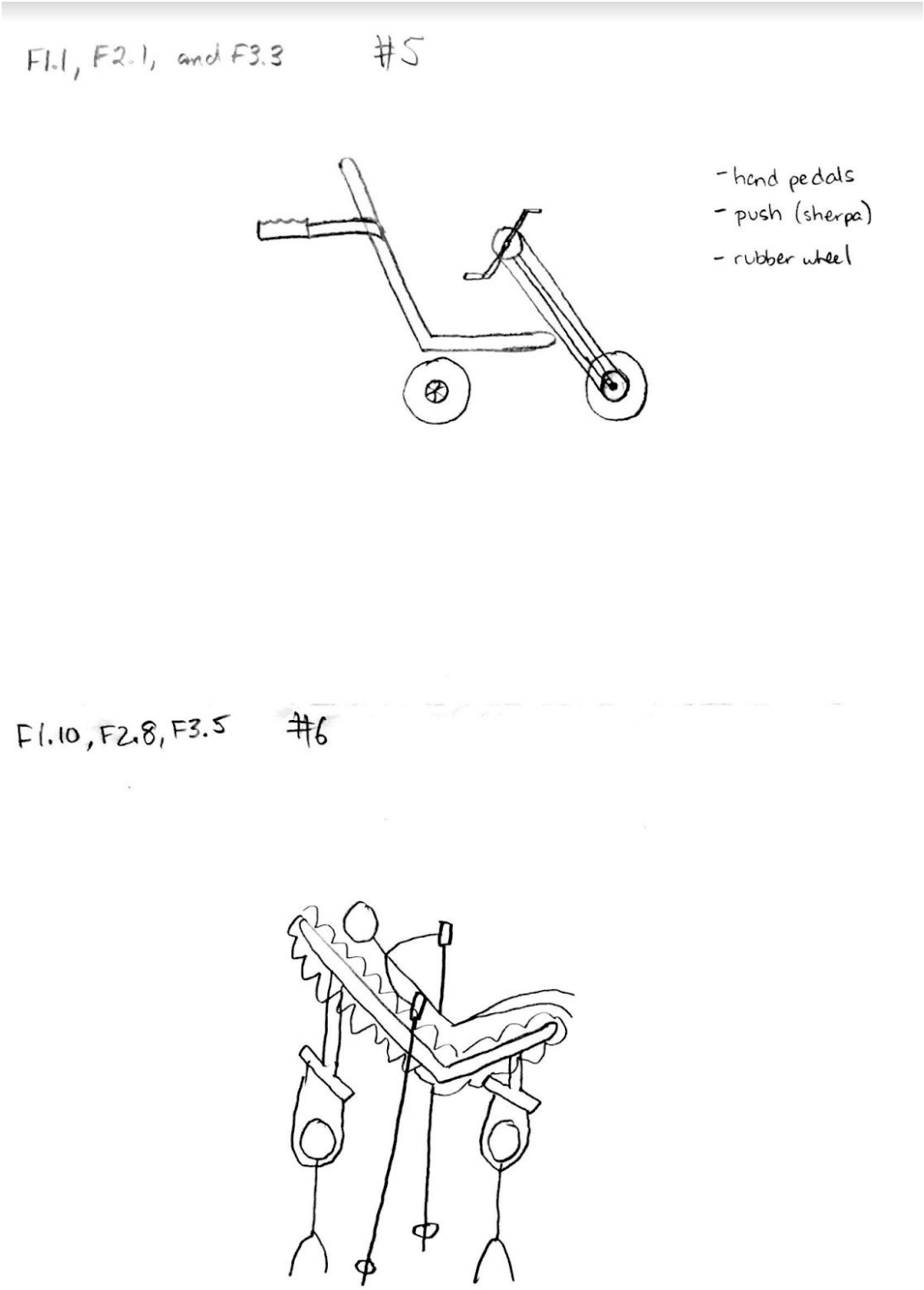

Figure 7: Full Concepts 5 and 6

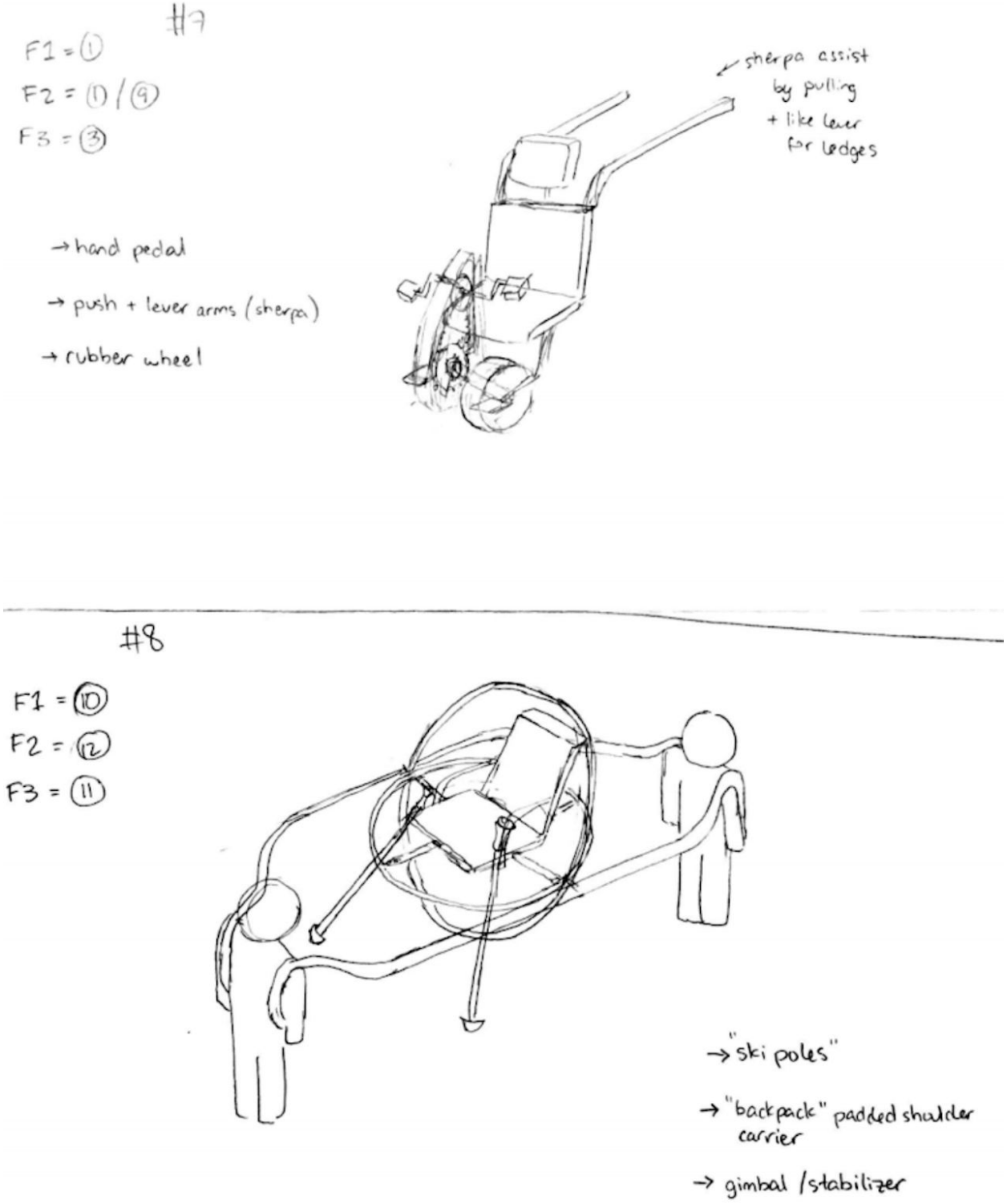

Figure 8: Full Concepts 7 and 8

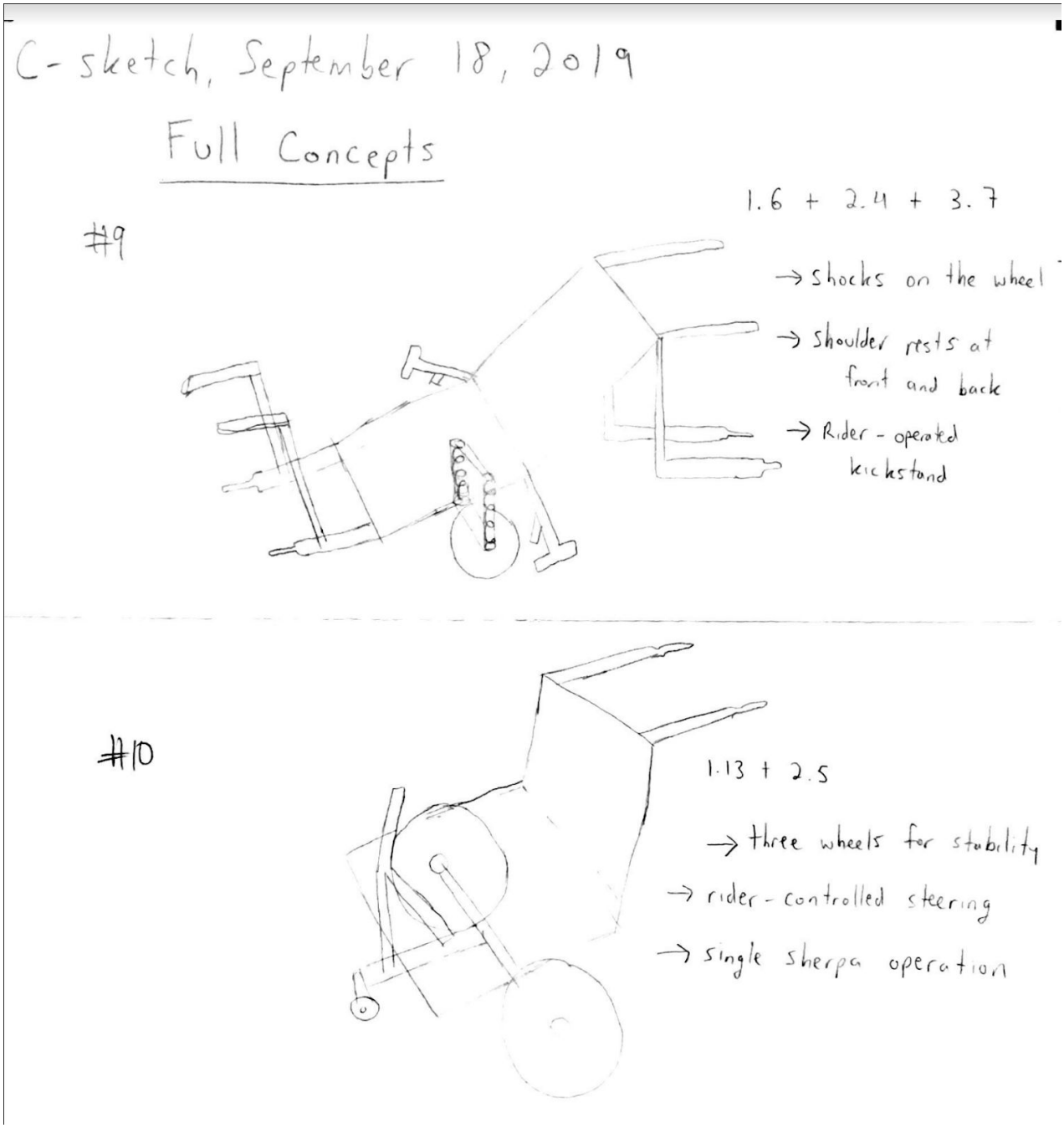

Figure 9: Full Concepts 9 and 10

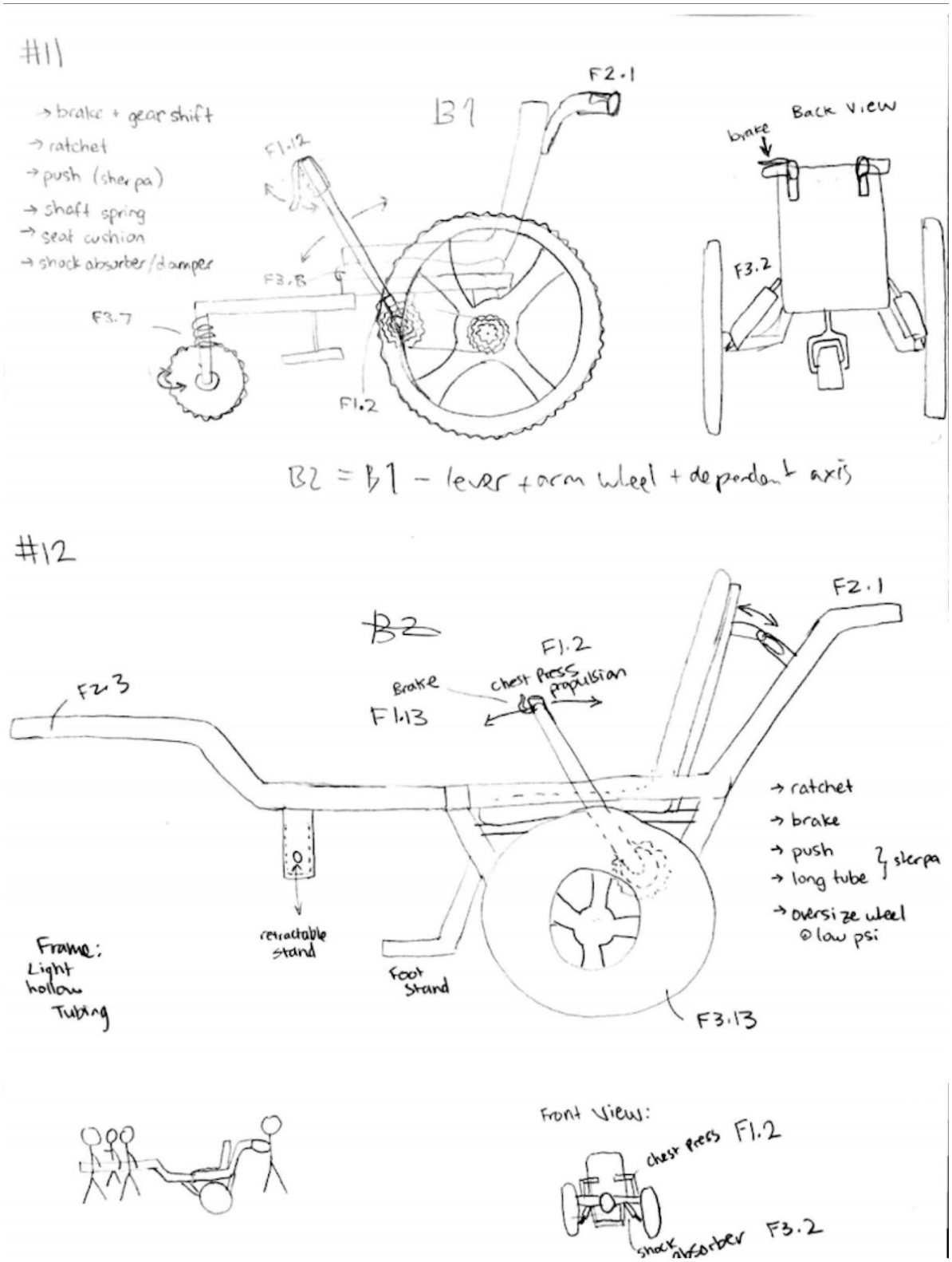

Figure 10: Full Concepts 11 and 12

Winnowing

We winnowed the full concepts based on feasibility, requirements, and technical readiness.

Table 3: Winnowing Chart

Full Concepts	1	2	3	4	5	6
Feasibility	Pass: One person can reasonably drag another person in a wheelchair. It does not break any physical laws and has a design basic enough for manufacturing.	Pass: One person can reasonably carry another person in a wheelchair. It does not break any physical laws and has a design feasible for manufacturing.	Pass: The mechanics are simple and the design could reasonably be produced at a moderate price point comparable to a regular wheel chair	Pass: The mechanics are simple and the design could reasonably be produced at a moderate price point comparable to a regular wheel chair	Pass: Even if the rider cannot provide enough power by hand, it will still take some of the load off the sherpa	Fail: Not feasibly for sherpas to carry the weight of the rider over head for a long time period.
Requirement: Safety	Pass: Chair design similar to regular wheelchair, which is a tried-and-true design.	Fail: rider is on second story, which is a high COG and therefore a tipping hazard. Also, it's a potential collision hazard with tree branches/leaves.	Pass: Three wheels enable stand alone stability with or without a sherpa	Pass: Three wheels enable stand alone stability with or without a sherpa	Pass: Sherpa can stablize the device	
Requirement: Rider Interaction	Pass: Has rail on wheels which allows rider to wheel themselves. Seat does not have guards to prevents rider from reaching environment.		Pass: Standard wheel chair wheel system	Pass: Standard wheel chair wheel system	Pass: Ride can use hand pedals to help power	
Requirement: Sherpa Usability	Pass: Has handles in front and back for sherpa to push/pull device, similar to current design.		Pass: standard wheel chair handle styles; harnesses are widely available and could reasonably be fitted for such an application	Pass: standard wheel chair handle styles	Pass: Two handles for single sherpa to push/stabilize the device	
Technical Readiness	Pass: The chair is a modification of a regular wheelchair. The current design is proprietary, so this seems like a more simple and technically feasible design.		Pass: Device does not use any components beyond what is commonly available or could be outsourced with relative simplicity	Pass: Device does not use any components beyond what is commonly available or could be outsourced with relative simplicity	Pass: Device does not use any components beyond what is commonly available or could be outsourced with relative simplicity	
Result	Pass	Fail	Pass	Pass	Pass	Fail

Full Concepts	7	8	9	10	11	12
Feasibility	Pass: Even if the rider cannot provide enough power by hand, it will still take some of the load off the sherpa	Fail: using a 3 axis gimble for balance only leaves a surface area of (1/8 * 4*pi*r^2) of opening for disabled person to enter the seat. Also, can't have interaction sticks going out of gimble if the	Pass: Shock absorber is possible. Rider operated kickstand does not interfere with any driving mechanisms. Shoulder rests paired with handles for sherpas ease	Pass: Three wheels with one front for steering is possible. Similar to shopping carts.	Pass: modification to a standard wheelchair but with a third wheel, rider input options and suspension.	Pass: similar feasible exisitng design in chariot race
Requirement: Safety	Pass: Can add safety harness to seat. One wheel design is similar to current design, which is proven safe.		Pass: similar to current TrailRider. One wheel but two sherpas able to stabilize from tipping.	Pass: Three wheels good for stabilization	Pass: modification to a standard wheelchair, so safety features are very similar.	Pass: two wheels and sherpa as third contact completes the three supports for stability.
Requirement: Rider Interaction	Pass: Pedal can let rider contribute to power. Although, the pedal is connected in parallel to how the sherpa can drive the vehicle. This means that the overall speed is limited by the maximum driving force (ie either sherpa or rider fully driving the device).		Fai: no rider interaction	Pass: front steering wheel for rider	Pass: Rider has input via 'push/pull' handles, gear switching and braking.	Pass: Design implements the rachet mechanism for rider to input work into propulsion
Requirement: Sherpa Usability	Pass: Two handles for single sherpa			Pass: single sherpa operated by pushing	Pass: There is handle for sherpa to drive the vehicle.	Pass: Handles at the back for pushing, and single hollow aluminum tube at front for pulling
Technical Readiness	Pass: Device does not use any components beyond what is commonly available or could be outsourced with relative simplicity			Pass: all parts are simple and readily available	Pass: Looks like design can be achieved by modifying a regular wheelchair, using pre-made parts.	Pass: the components are standard, nothing out of ordinary. Similar existing design from chariot race
Result	Pass	Fail	Fail	Pass	Pass	Pass

Concepts for Evaluation

Many of the concepts that passed winnowing were similar so we combined some of them resulting in four concepts that will continue through evaluation. Top three functions to be met:

(4) The device enables rider input towards propulsion
(5) The device accepts input from Sherpas
(6) The device absorbs shock

Table 4: Concepts for Evaluation

Concept	Function 1	Function 2	Function 3
A.1	- Two independent hand pedals propelling each wheel through a single speed gear train.	- Two extending front rods with grip handles and brake lever. - Rear ergonomic push handles with two handle positions. Two brake levers incorporated (one for each position).	- Two low PSI all-terrain tires with tall sidewalls. - Air cushion under the rider's main cushion seat.
A.2	- Centre hand pedal that connects to solid shaft on either side using chains and sprockets, using a single speed gear train.	- Two extending front rods with grip handles and brake lever. - Rear ergonomic push handles with two handle positions. Two brake levers incorporated (one for each position).	- One low PSI all-terrain tire with tall sidewalls. - Air cushion under the rider's main cushion seat.
B.1	- Lever arm propulsion to rotate chain and sprocket. - Independent left and right wheels allows for turning.	- Rear ergonomic push handles with two handle positions. Two brake levers incorporated (one for each position).	- Regular foam fitted seat. - Spring on castor wheel.
B.2	- Traditional handrim wheel propulsion	- Rear ergonomic push handles with two handle positions. Two brake levers incorporated (one for each position).	- Two low PSI all-terrain tires with tall sidewalls - Regular foam fitted seat. - Spring on castor wheel.

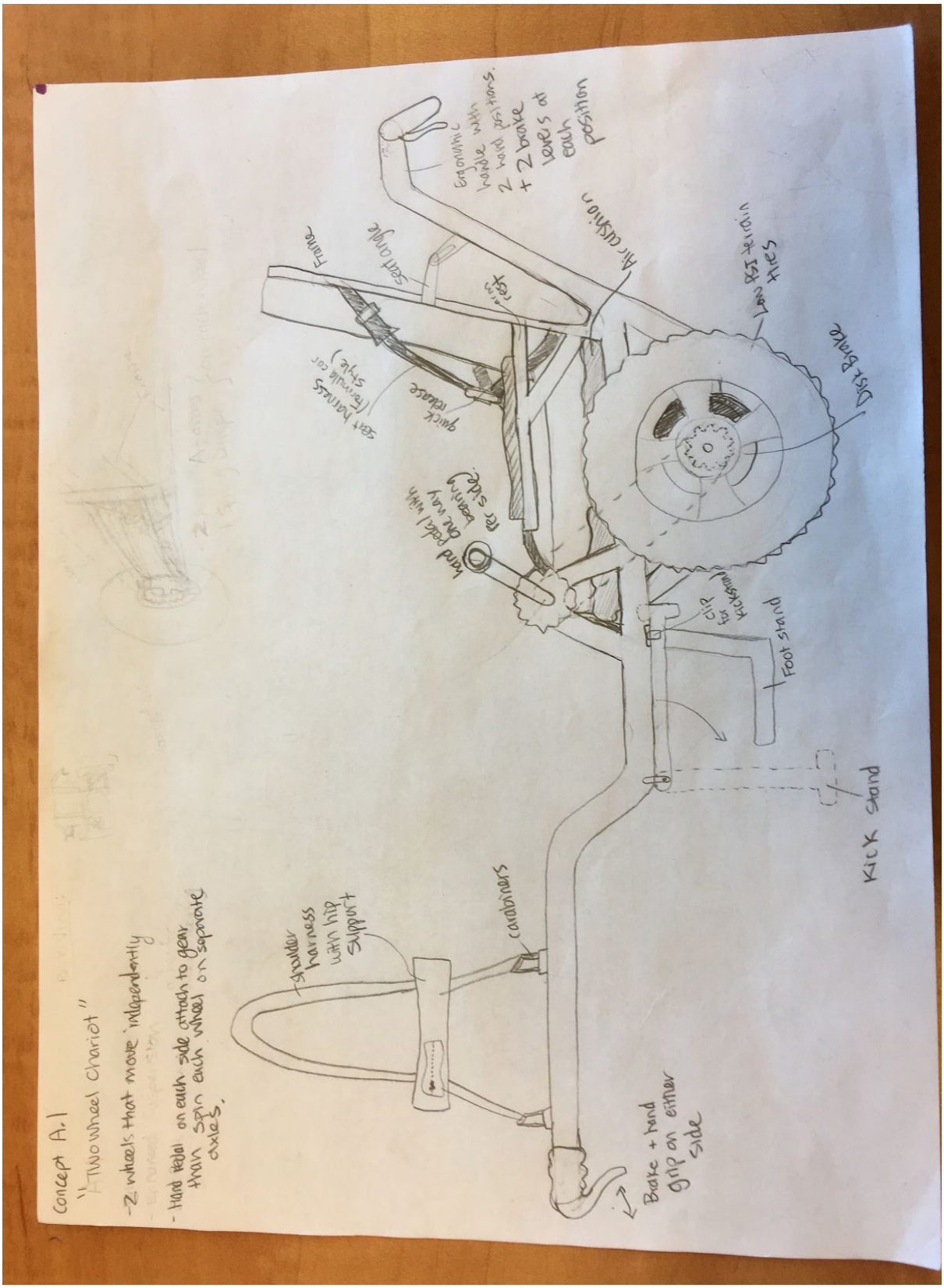

Figure 11: Concept A.1

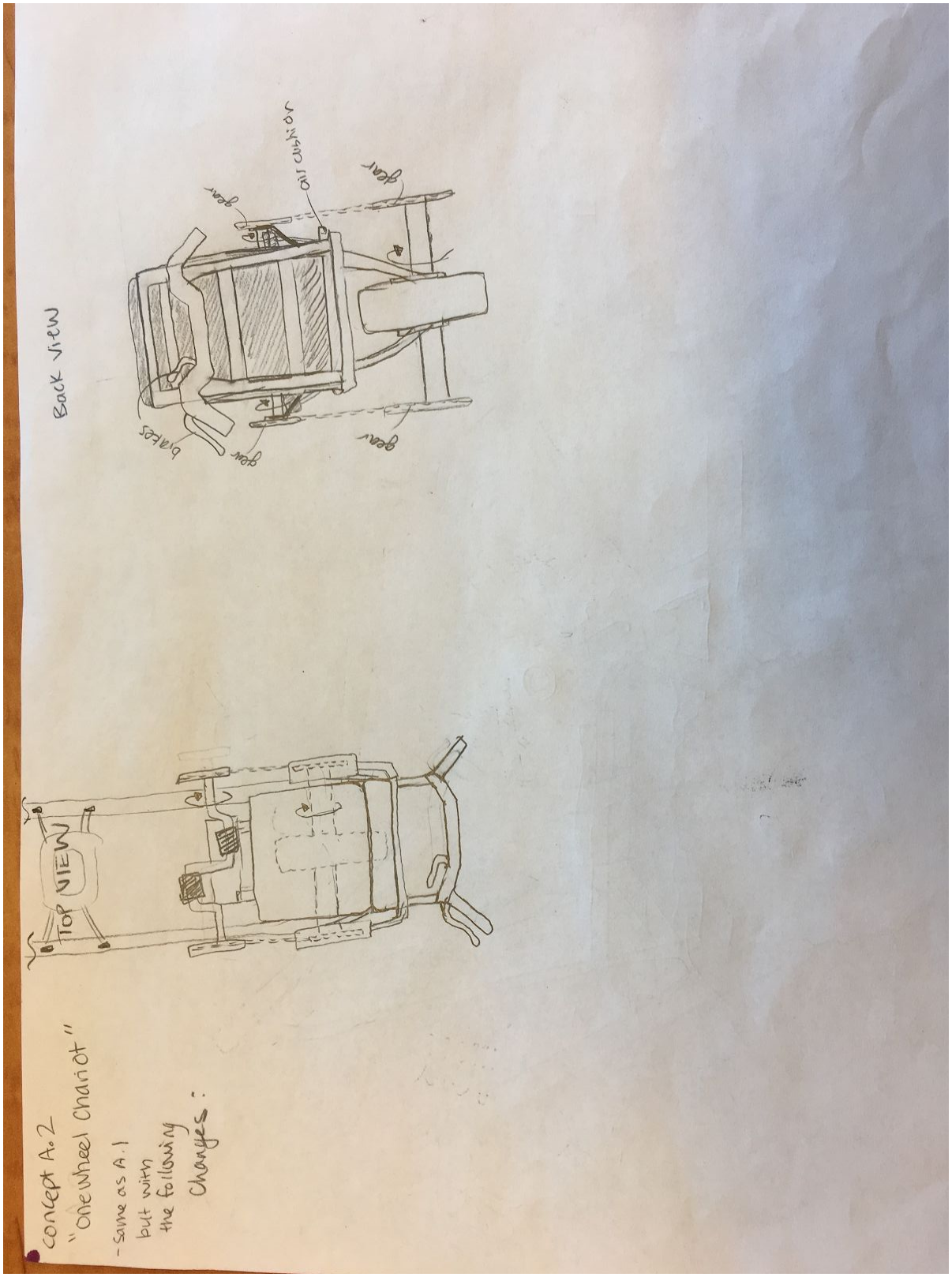

Figure 12: Concept A.2

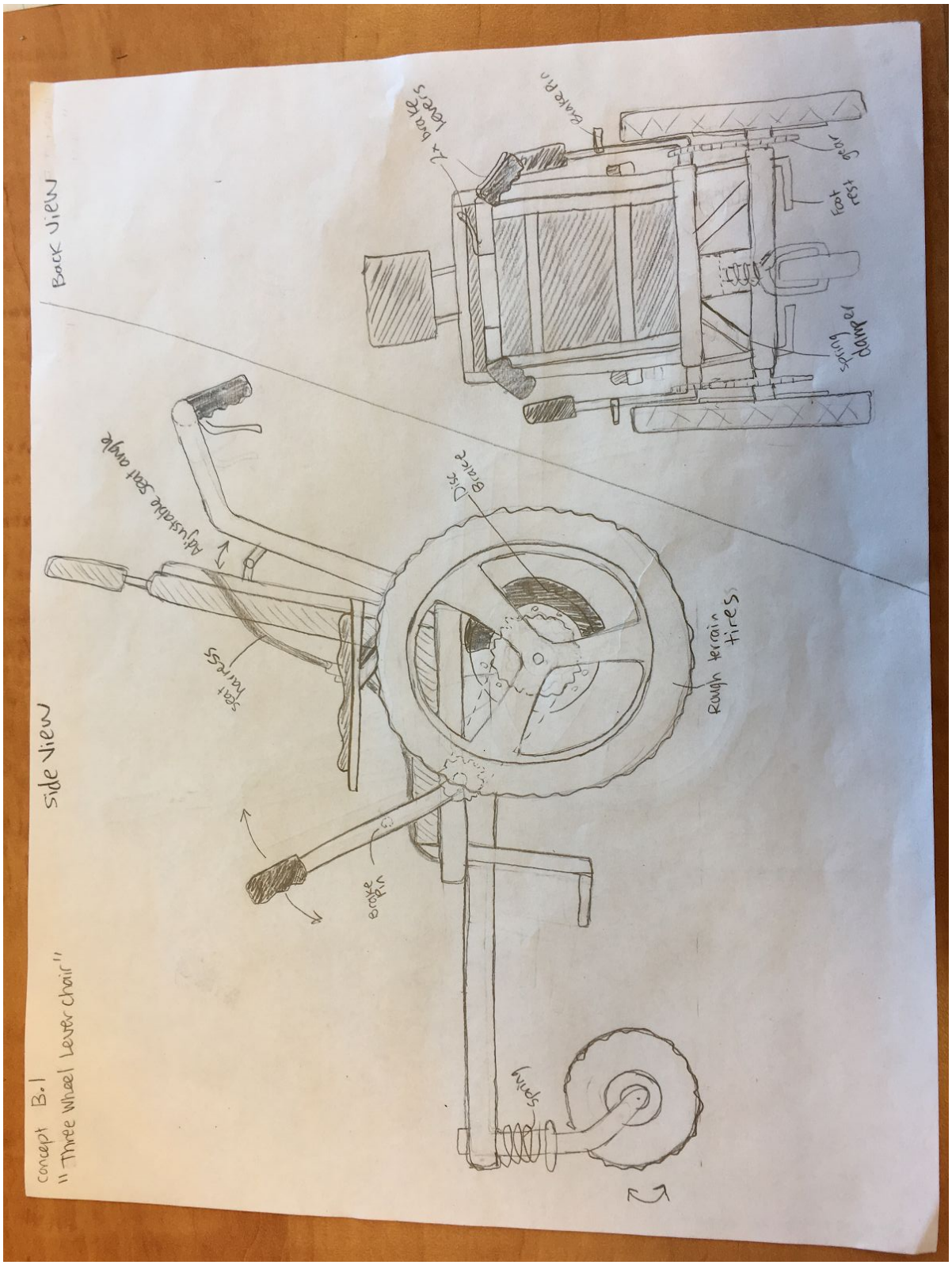

Figure 13: Concept B.1

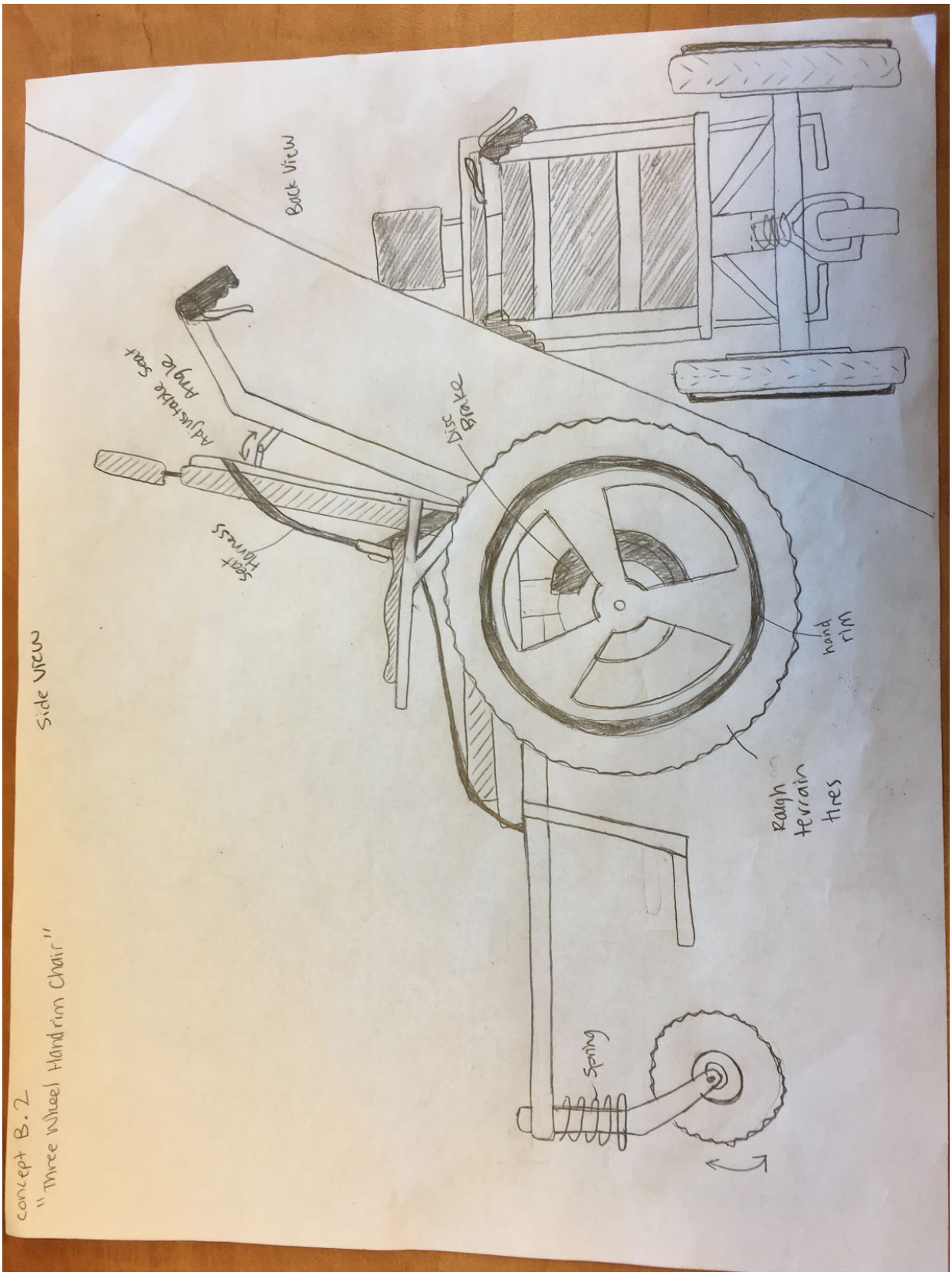

Figure 14: Concept B.2

Weighted Decision Matrix

Table 5: Weighted Decision Matrix

Evaluation Criteria		*A1: Double wheel, pedal powered charriot*			*A2: Single wheel, pedal powered charriot*			*B1: 3 Wheeled chair with lever propulsion*			*B2: 3 Wheeled chair with standard propulsion*			*Trail Rider*		
	Weighting (%)	Rating (/10)	Rating Justification	Score	Rating (/10)	Rating Justification	Score	Rating (/10)	Rating Justification	Score	Rating (/10)	Rating Justification	Score	Rating (/10)	Rating Justification	Score
Sherpas required	40%	7		2.8	3		1.2	8		3.2	7		2.8	3		1.2
Mech efficiency	35%	8		2.8	8		2.8	8		2.8	6		2.1	0		0
Cost	25%	3		0.75	4		1	8		2	10		2.5	2		0.5
Rider comfort	0%			0			0			0			0			0
Portability	0%			0			0			0			0			0
Durability	0%			0			0			0			0			0
Net Score				6.35			5			8			7.4			1.7
Rank				3			4			1			2			5

Sherpas Required - 40%

The number of Sherpas required to use the device is based on an average round trip on our predefined terrain (Prospect Point, Stanley Park and Pacific Spirit Park). Note that this criterion does not take into account the specific power output of each Sherpa; it assumes an ‘average’ healthy individual such as the BCMOS volunteers.

The scale is based on our estimate of customer satisfaction with each number of required Sherpas.

Table 6: Sherpas Scoring

Score	Description
10	Rider can use the device completely independently on a round trip on a flat trail
9	
8	
7	A round trip can be completed with one Sherpa
6	
5	
4	
3	A round trip can be completed with two Sherpas
2	
1	Device requires more than two Sherpas

Mechanical Efficiency from Rider - 35%

Mechanical efficiency is defined as the percentage of the power outputted by the rider to the resulting power outputted by the device. Based on this article, the mechanical efficiency of an arm-crank ergometer is ~20%, whereas for a conventional wheelchair drive it is ~10%.

The satisfaction scale is based on the calculation shown in the Appendix, with a 10 being the required mechanical efficiency that would allow the rider to independently overcome rolling resistance for a one hour trip on flat ground.

Table 7: Efficiency Scoring

Score	Description
10	Mechanical efficiency of >17%
9	Mechanical efficiency of 13%
8	10%
7	8%
6	6%
5	5%
4	4%
3	3%
2	2%
1	1%

Cost - 25%

Production cost is quantified by a rough estimate using our team's knowledge and research of the mechanical components in each concept. The cost inherently includes the simplicity criterion.

The scale was developed to reflect customer satisfaction at each price point; the maximum allowable cost is defined as $9000 because that is the average disposable income for individuals with disabilities (Exhibit 1, page 11).

Table 8: Cost Scoring

Score	Description
10	The device costs ≤ $3000 CAD

9	$3001 - $3500 CAD → GRIT Freedom Chair
8	$3501 - $4000 CAD
7	$ 4000 - 4500 CAD
6	$ 4500 - 5000 CAD
5	$ 5000 - 5500 CAD → Joelette
4	$ 5500 - 6000 CAD
3	$ 6000 - 7000 CAD
2	$ 7000 - 8000 CAD → TrailRider
1	$ 8000 - 9000 CAD

Power Calculations

- The rolling resistance that can be expected from the device is ~10N (a generous estimate based on the data from this article [Table 4])
- Based on this article, the average power output sustained for one hour of a healthy person through foot pedals is 200 W.
- Estimate that arms can output 30% of the power of the legs, at 60W for one hour.
- A device would need a mechanical efficiency of at least 17% to generate enough power to overcome rolling resistance for one hour at 1 m/s.

- For an 80kg person, the force required to overcome gravity on a 5° incline is ~68N
- In total, this is 78N. Moving at 0.5 m/s this requires a power output of 39W.
- Assuming a 5 minute climb, using the same power output assumptions as above, a mechanical efficiency of 43%, probably not possible independently.
- Would even require 33% ME for a 1 minute climb on 5°

Rejected Evaluation Criteria

Simplicity

Simplicity will be assessed based on our team's knowledge of mechanical systems. Given the tight time constraints of the project, it is given a substantial weight of 15%.

Stability:

Stability is quantified based on the maximum roll angle that a chair can sustain before tipping over. The tipping angle is a function of the wheel width and the height of the Rider's center of gravity.

In terms of high-severity failure modes, tipping is estimated to be the most likely. However, we chose to remove it as an evaluation criteria in the WDM because the location of the COG and the wheel width can be easily varied (with the exception of the one-wheel concept). This design choice will instead be explored in the detailed-design phase.

Durability

Durability is nearly impossible to accurately assess before detailed design, so it will be evaluated based on our team's knowledge of the durability of mechanical systems (eg. brakes, pedals, chains) that appear in each concept.

The weight that the durability criterion is given in the WDM is low (5%) to reflect the large uncertainty that comes with it. Durability is also intertwined with simplicity.

Rider Comfort

Rider comfort will be evaluated based on the criteria from this article. The ten criteria of a comfortable chair are shown in the table below.

Table 9: Rider Comfort Scoring

1	Backrest's shape promotes natural spine curve of the lower back
2	Backrest is adjustable vertically
3	Backrest is adjustable horizontally
4	Backrest's material promotes firm lumbar support
5	Buttrest is adjustable vertically and horizontally
6	Buttrest is supported by at least a 5-point base
7	Buttrest is angled such that the thighs are horizontal with 90°-110° angle with hips
8	Armrest is angled so that the elbow bends at 90°, forearm is parallel to buttrest
9	Armrest is adjustable vertically and horizontally
10	Feet are fully supported and parallel to buttrest

Portability

The portability of the device is quantified based on the size of vehicle that it can be transported in. Given that most vehicle trunks are shaped like rectangular prisms and the vehicle websites merely supply the trunk volume, the trunk dimensions of several common vehicles are estimated as shown below.

Table 10: Portability Dimensions

Width	x
Height	x
Length	2x
Volume	$2x^3$

Volume breakdown

V (ft^3)	V (m^3)	x (m)	Model
9.2	0.26	0.51	2017 SmartForTwo
15	0.42	0.60	2019 Honda Civic
25	0.71	0.71	2019 Nissan Kicks
38	1.08	0.81	2019 Toyota Rav4
46	1.30	0.87	2019 Toyota 4Runner

Sample Trunk Volumes

Appendix F: Engineering Calculations and Analyses

F-1 Train Value Calculations

F-1.1 Rationale for this calculation

- In the DMFEA, items 12.1 and 12.2 rate an inappropriate train value as a high RPN concern (RPN = 64). This is because the implementation of rider propulsion is the primary design improvement from the current TrailRider, and failure to do so effectively would greatly diminish the value of the device.
- Requirement 7.3 states that the time to reach top speed for the device is less than 5 seconds, which is largely impacted by the train value.
- Requirement 7.4 states that the top speed of the device is greater than 1.0 m/s, which is also largely impacted by the train value.

F-1.2 Deriving the governing equations

The main tradeoff that affects the train value selection is the top speed of the device against its initial acceleration.

The governing equation for a train value based on top speed is derived from the diagram below.

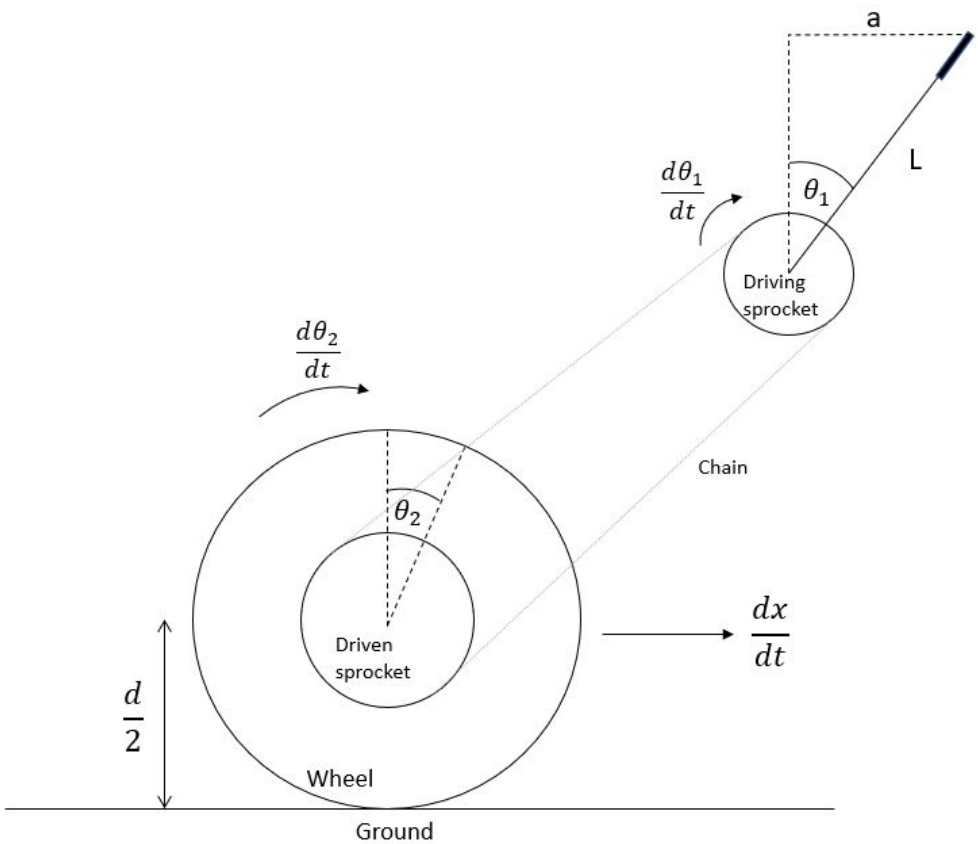

Figure 1: Diagram for steady state speed

Assumptions

- The motion of the rider's hand is linear (a)
- The power delivered in each stroke of the lever at top speed is sufficient to overcome rolling resistance and maintain constant velocity of the pulleys
- There is no slipping between the ground and the tire
- Efficiency of power transmission between the two sprockets is 100% (conservative estimates are applied elsewhere in this calculation so using less efficiency is unnecessary)

Now the following equations are obtained

$$\theta_1 = sin^{-1}(a/L) \tag{1}$$

$$\frac{d\,\theta_1}{dt} = \frac{d}{dt}(sin^{-1}(a/L)) = (1-(a^2/L^2))^{-1/2} * (L)^{-1} * \frac{da}{dt} \tag{1.1}$$

$$\frac{d\,\theta_2}{dt} = e * \frac{d\,\theta_1}{dt} \tag{2}$$

$$H_{rider} = F_{hand} * v_{hand} = F * \frac{da}{dt} \quad (3)$$

$$\frac{dx}{dt} = \frac{d\theta_1}{dt} * 0.5d \quad (4)$$

$$\boxed{e = \frac{dx}{dt} * (0.5Hd)^{-1} * LF_H\sqrt{1 - a^2/L^2} \quad (5)}$$

The governing equation for a train value based on the initial acceleration is derived based on the free body diagram shown below.

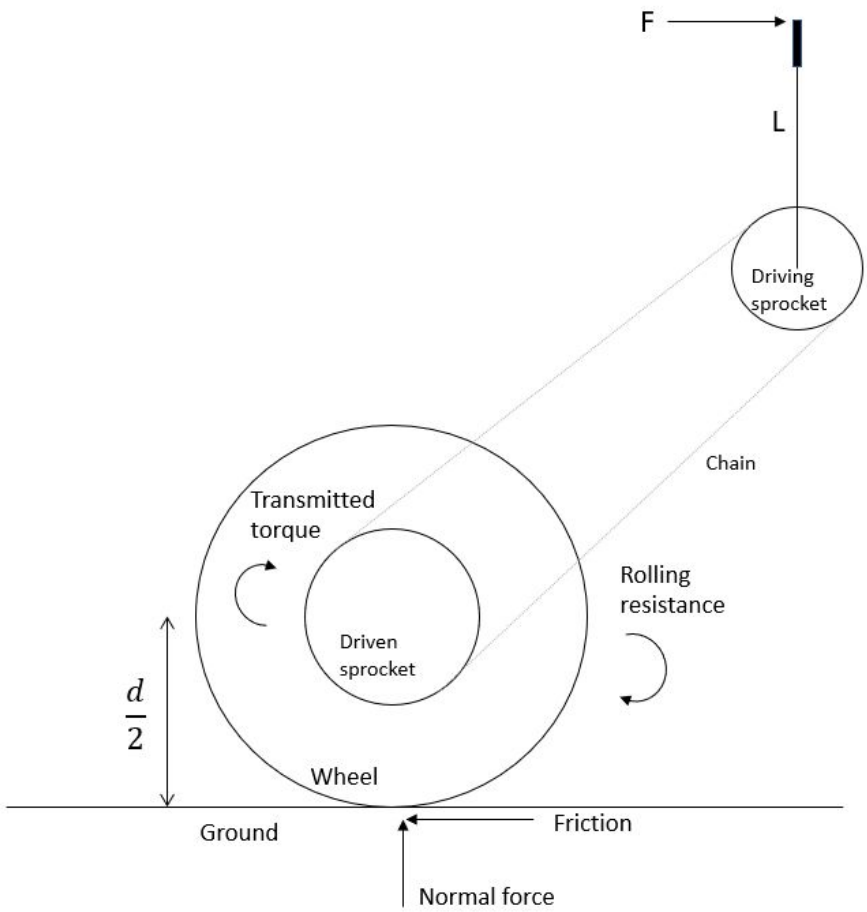

Figure 2: FBD for initial acceleration

Assumptions

- The input torque is assumed to be constant throughout the entire powerstroke
- There is no slipping between the ground and the tire
- The efficiency of power transmission between sprockets is 100%

Now the following equations are obtained

$$T_{in} = F_H L \quad (6)$$

$$T_{out} = (1/e) T_{in} \quad (7)$$

$$a = (2T_{out}/d - F_{RR})/m \quad (8)$$

$$\Delta t = (v_f - v_i)/a = \frac{dx}{dt}/a \quad (9)$$

$$\boxed{e = 2F_H L \Delta t / [d(m\frac{dx}{dt} + \Delta t\, F_{RR})] \quad (10)}$$

Equation 5 and Equation 10 give two relationships for the train value based on two different parameters: top speed of the device ($\frac{dx}{dt}$) and the time to reach top speed from rest (Δt).

F-1.3 Estimating Parameters

The next step is to estimate the values of the known parameters, which is done in the table below.

Table 1: Known parameters

Parameter	Value	Units	Source
d (wheel diameter)	0.66	m	26” wheels are chosen for our device.
a (arm extension)	0.4	m	Estimate based on comfortable arm extension.
L (lever length)	0.5	m	Estimate based on other lever drive systems.
F_{RR}	9	N	See *Note 1* below, also see Limitations Section
H (power input)	30	W	See *Note 2* below, also see Limitations Section
m	76	kg	Estimated average mass of rider and device

Note 1: The rolling resistance of a manual wheelchair with their experimental set up is at most 7.7 N [1]. 9 N is used for this calculation as a conservative estimate.

Note 2: The average power output of a person through pedals over ninety minutes is approximately 150W [2]. As a conservative estimate, it is assumed that arms can produce 20% of the power of legs while pedalling. Therefore, the input power is 30W.

F-1.4 Calculating the train value

Equations 5 and 10 were inputted into a spreadsheet and the remaining parameters were manually iterated until a reasonable combination was achieved. The first train value calculation iteration is shown below.

Symbol	Name	Value	Units
m	Rider mass	76	kg
L	Bar Length (m)	0.5	m
a	Travel Dist. (m)	0.4	m
d	Wheel Diameter (m)	0.66	m
H	Power input (W)	30	W
Frr	Rolling resistance	9	N
F	Force input	20	N
da/dt	Hand speed	1.50	m/s
dx/dt	Linear chair speed (m/s)	1.22	m/s
t	Time to top speed	2.90	s
e (eqn 5)	Train Value	0.7394	
e (eqn 10)	Train Value	0.7396	

Figure 3: First train value iteration

As seen, a train value of approximately 0.74 is obtained. Given that a 17 tooth pulley is chosen for the driving sprocket (see Section F-2), this train value requires a 23 tooth driven sprocket. 24 tooth sprockets are far more common in bike cassettes, so a train value of 17/24 = 0.71 is used instead. The parameters in the spreadsheet were adjusted to achieve this value as shown below.

Symbol	Name	Value	Units
m	Rider mass	76	kg
L	Bar Length (m)	0.5	m
a	Travel Dist. (m)	0.4	m
d	Wheel Diameter (m)	0.66	m
H	Power input (W)	30	W
Frr	Rolling resistance	9	N
F	Force input	20	N
da/dt	Hand speed	1.50	m/s
dx/dt	Linear chair speed (m/s)	1.17	m/s
t	Time to top speed	2.64	s
e (eqn 5)	Train Value	0.7091	
e (eqn 10)	Train Value	0.7100	

Figure 4: Second and final train value iteration

The final choice of parameters based on this process are summarized in the table below.

Table 2: Performance parameters

Parameter	Value	Units	Justification
dx/dt (top speed at 30W input power)	1.17	m/s	Requirement 7.4 states that this value should be greater than 1 m/s.
F_H (rider hand force)	20	N	Chosen in tandem with da/dt based on reasonable values that achieve the calculated power input.
da/dt (rider hand speed)	1.5	m/s	See the field above.
Δt (time to top speed)	2.63	s	Requirement 7.3 states that this value should be less than 5 seconds.
e (train value)	0.71	n/a	See the process above.

Thus, 0.71 is chosen as the default train value.

F-1.5 Variable train value option

This work does not yet address item 12.2 in the DFMEA, which states that the specified train value will not be suitable for all users due to differing physical capabilities.

The ‘action item’ for this failure mode is to use a cassette with various sprockets that allow for different train values for users upon purchase of the device. The cassette includes 28-tooth, 24-tooth and 20-tooth sprockets. The figures below show the performance of the device based on these train values, with increased power input at 40W and decreased power output at 20W. Note that the values at 20W input are near the boundaries for Requirement 7.3 and 7.4 (minimum 1 m/s top speed and maximum of 5 seconds to reach top speed).

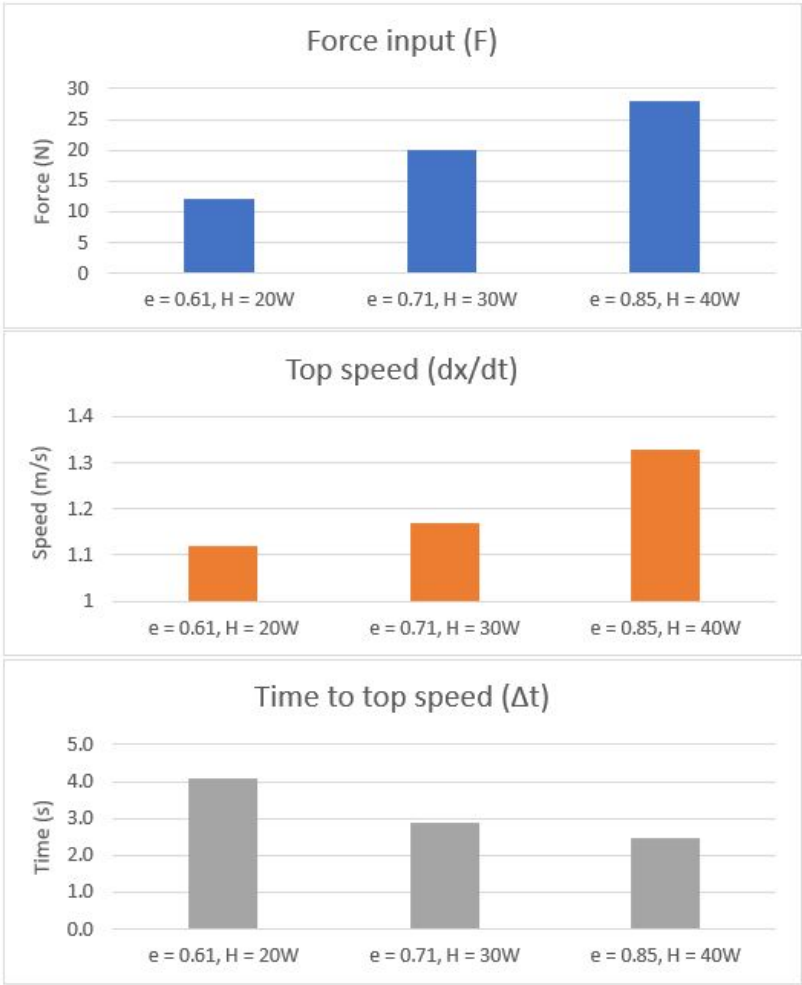

Figure 5: Device performance at various power inputs

F-1.6 Limitations

These calculations are intended to be an approximation for an appropriate train value. It is not possible to confidently determine the best value without physically testing the device. The most likely sources of error in these calculations are summarized below.

<u>F_{RR}, Rolling Resistance</u>

Sources of Error	This value was taken from literature for a standard manual wheelchair [1]. Our device has mountain bike tires, a different weight distribution, an all-terrain caster and other key differences. Additionally, the rolling resistance force will depend on the mass of the rider, which is held constant in these calculations. A more accurate calculation would estimate the coefficient of rolling resistance for the device and scale

the resistive force according to rider mass.

Effect on Analysis

Incorrectly approximating this value will only result in minor performance variations. As seen, the rolling resistance can be increased to 35 N (a 290% increase) before the requirements for speed and acceleration are not met. It is highly unlikely that the rolling resistance is that high. Regardless, the optimal nominal train value will still be achievable with off-the-shelf sprockets.

Symbol	Name	Value	Units
m	Rider mass	76	kg
L	Bar Length (m)	0.5	m
a	Travel Dist. (m)	0.4	m
d	Wheel Diameter (m)	0.66	m
H	Power input (W)	30	W
Frr	Rolling resistance	35	N
F	Force input	20	N
da/dt	Hand speed	1.50	m/s
dx/dt	Linear chair speed (m/s)	1	m/s
t	Time to top speed	5.00	s
e (eqn 5)	Train Value	0.6061	
e (eqn 10)	Train Value	0.6036	

Figure 6: Maximum rolling resistance calculation

Proposed Mitigation

Rolling resistance is specific to the device and situation and cannot be accurately determined through research. The best mitigation is to build a physical prototype and test the rolling resistance under a variety of conditions (e.g. rider mass, tire pressure, bearing quality).

H, Power Input

Sources of Error

This value was approximated based on the power of legs during pedalling. The value of 20% used to relate leg strength to arm strength may be too conservative (on average men can bench press 70% of the weight they squat [3]).

Effect on Analysis

The effect of variations in input power is addressed in Section F-1.5. 20W is near the minimum power input that would meet device requirements. An increase in power input simply increases the optimal train value.

Proposed Mitigation

More thorough research, including speaking with experts in the field, may be sufficient to obtain more accurate power input values. Alternatively, a prototype drive-train could be assembled and the power input of various users could be measured directly. This would

also inform the range of train values discussed in Section F-1.5.

m, Rider and Chair Mass

Sources of Error

This value is held constant throughout the analysis. Of course, riders will have varying masses.

Effect on Analysis

The greatest effect of mass variation will likely occur indirectly through variations in rolling resistance and power input, which are discussed above. The direct influence of mass in Equation 10 will only result in minor performance changes. Without considering changes in power input or rolling resistance, the rider mass can be increased to 204 kg before the speed and acceleration requirements are not met.

Symbol	Name	Value	Units
m	Rider mass	204	kg
L	Bar Length (m)	0.5	m
a	Travel Dist. (m)	0.4	m
d	Wheel Diameter (m)	0.66	m
H	Power input (W)	30	W
Frr	Rolling resistance	9	N
F	Force input	20	N
da/dt	Hand speed	1.50	m/s
dx/dt	Linear chair speed (m/s)	1	m/s
t	Time to top speed	5.00	s
e (eqn 5)	Train Value	0.6061	
e (eqn 10)	Train Value	0.6085	

Figure 7: Maximum mass calculation

Proposed Mitigation

As discussed above, the impact of mass on rolling resistance is important to characterize, which can be done by determining the coefficient of rolling resistance for the device.

F-1.7 Responsible Personnel

The following personnel are responsible for the calculations in Section F-1.

Authored by	Carson Hopkins	Carson Hopkins
	Name	Signature
Verified by	Julia Zhuravleva	

Name Signature

F-2 Chain and Sprocket Calculations

F-2.1 Rationale for this Calculation

The need for wear and fatigue calculations for the chain and sprockets is informed by the DMFEA. The table below summarizes the specific DMFEA items that are addressed and the process for doing so.

Table 3: Sprocket and chain calculation process

DFMEA item No.	Failure Type	Analysis for mitigation
9.1	Wear	Follow the process for mitigating roller wear outlined in Shigley's [4]. For an accurate analysis from this method, the following criteria must be met. ● $(Life\ expectancy)_{allowable} = 15000\ hr$ ● Train value is less than 6:1 ● Single strand chain ● ANSI proportions ● Service factor of unity ● 100 pitches in length ● Recommended lubrication implemented ● Elongation maximum of 3 percent ● Parallel Shafts
9.2	Roller fatigue	● Calculate $H_{allowable}$ ● Using $H_{allowable}$ and desired safety factor, select ANSI driving sprocket ● Recalculate safety factor to verify that it meets specifications
0.3	Link-plate fatigue	Same as the field above

F-2.2 Governing Equations

Sprocket life expectancy:

$t_{allowable} = 15000hrs$

$(trip\ per\ lifetime) = (rides\ /\ weekend\ day)\ *\ (weekend\ days\ /\ month) * (usable\ months\ /\ year) * (years\ /\ lifetime)$

$t_{design}\ = (trip\ per\ lifetime) * t_{sustained} = (trip\ per\ lifetime)\ * x_{trail}\ /\ v_{desired}$

$SF\ = t_{allowable}\ /\ t_{design}$

Sprocket stress:

$F_{driven} = fF_{normal} = f(m_{person} + m_{chair})g\ /\ 2$

$H_{out} = F_{driven} v_{desired}$

$H_{in} = fn(t_{sustained}) = fn(x_{trail}\ /\ v_{desired})$

$H_{nom} = H_{in}$

$n_d = (loss\ of\ function\ parameter)\ /\ (maximum\ allowable\ parameter)\ = H_{out}\ /\ H_a$

$H_d = H_{nom} K_s n_d$

$SF\ = \frac{H_a}{H_d} = \frac{H_a}{H_{nom} K_s n_d} = \frac{H_a}{H_{nom} K_s \frac{H_{out}}{H_a}} = \frac{H_a^{\ 2}}{H_{nom} K_s H_{out}}$

$H_a = \sqrt{SF\ * H_{nom} * K_s * H_{out}}$

$H_a = (Tabulated\ power) * (Correction\ factor) * (Strand\ correction\ factor) = H_{tab} K_1 K_2$

$H_{tab} = fn(\leq 15000 hr\ use, min(\omega_{driving} = \omega_{driven}/e, \omega_{driven} = v_{desired}\ /\ (\pi d_{wheel})), ANSI\ number)$

F-2.3 Summary of Known Values

Table 4: Summary of known values

Description	Symbol	Value	Units	Source
Distance of Stanley Park trail	x_trail	6500	m	[5]
Mass of device	m_chair	20.4	kg	[6]
Mass of rider	m_person	76	kg	[7]
Wheel diameter	d_wheel	0.66	m	26” wheels selected
Desired velocity	v_desired	1.00	m/s	Requirement 7.4
Service factor	K_s	1		Estimated based on expected light shock
Dynamic friction coefficient	f	0.01		[8]
Stress Safety Factor	SF	3		Requirement 2.6
Life Expectancy Safety Factor	SF	2		Requirement 2.7
Rides per day		1		Client Q&A (09/11/2019 at 3:00PM)
Weekend days per month		8		4 weeks/month
Usable months per year		4		Client Q&A (09/11/2019 at 3:00PM)

Years / lifetime		10		Requirement 6.1
Gravity	g	9.81	m/(s^2)	Common knowledge
Train value	e	0.71		Section F-1.4

F-2.4 Calculations

Sprocket life:

$(trip\ per\ lifetime) = (rides\ /\ weekend\ day) * (weekend\ days\ /\ month) * (usable\ months\ /\ year) * (years\ /\ lifetime)$

$(trip\ per\ lifetime) = 1 * 8 * 4 * 10 = 320$

$t_{design} = (trip\ per\ lifetime) * t_{sustained} = (trip\ per\ lifetime) * x_{trail} / v_{desired} = 320 * 6500/1 = 577.78hr$

Sprocket stress:

$F_{driven} = fF_{normal} = f(m_{person} + m_{chair})g / 2 = 0.008(20.41 + 83.8)9.81/2 = 4.1N$

$\omega_{driven} = v_{desired} / (\pi d_{wheel}) = 1/(\pi 0.66) = 0.48\ rot/s$

$H_{out} = F_{driven} v_{desired} = 4.1W$

$H_{in} = 0.3 * fn_{leg}(t_{sustained}) = 0.3 * fn_{leg}(x_{trail} / v_{desired}) = 0.3 * fn_{leg}(6500/1 = 108.33min) = 0.3 * 100W = 30W$

$H_{nom} = H_{in} = 30W$

$H_a = \sqrt{SF * H_{nom} * K_s * H_{out}} = \sqrt{3 * 30 * 1 * 4.1} = 13.32W = 0.02HP$

Next, the driving sprocket is chosen to be 17-teeth and the chain is chosen to be single strand such that:

$K_1 = 1$

$K_2 = 1$

$\omega_{driven} = v_{desired} / (\pi d_{wheel}) = 1/(\pi 0.66) = 0.48\ rot/s = 28.92rpm$

$\omega_{driving} = \omega_{driven}/e = 28.92/0.7 = 41.31rpm$

$H_{tab} = fn(\leq 15000hr\ use, min(\omega_{driven}, \omega_{driving}), ANSI\ number)$

$H_{tab} = fn(577.78hr, 28.92rpm, 40\ ANSI\ number) = 0.03\ HP$

$H_a = H_{tab} K_1 K_2 = 0.03 * 1 * 1 = 0.03HP = 21.28W$

Stress safety factor verification:

$SF = \frac{H_a^2}{H_{nom} K_s H_{out}} = \frac{21.28^2}{30*1*4.1} = 7.66 \geq 3$

Life expectancy safety factor verification:

$SF = t_{allowable} / t_{design} = 15000/577.78 = 25.96 \geq 2$

F-2.5 Conclusion

- Requirement 2.6 is met, as the stress safety factor is 7.7
- Requirement 2.7 is met, as the life-expectancy safety factor is 26
- The RPN of the DMFEA items identified in Section F-2.1 are reduced below the level of concern

F-2.6 Responsible Personnel

The following personnel are responsible for the calculations in Section F-2.

Authored by	Ratthamnoon Prakitpong	
	Name	Signature
Verified by	Carson Hopkins	Carson Hopkins
	Name	Signature

F-3 Tipping Calculations

F-3.1 Tipping in the roll direction

Rationale for this calculation:

- Item 11.1 in the DMFEA rates tipping in the roll direction as a high RPN concern (54) until further explored
- Requirement 2.3 states that the chair is able to roll over an obstacle of at least 30cm with one wheel without tipping

The governing equation for roll tipping is derived from the FBD below

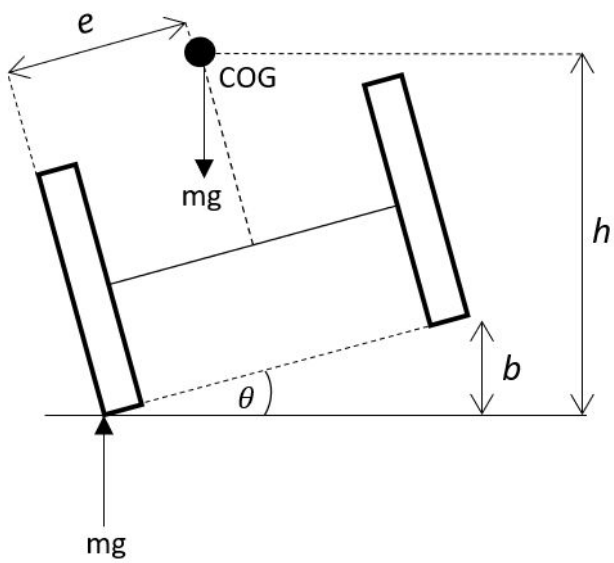

Figure 8: FBD for roll tipping

- The wheelchair tips when center of mass is vertical above the point of contact.
- This occurs when $e/h = sin\theta$ (1), where
  - e is the horizontal distance from the contact wheel to the center of mass
  - h is the vertical distance from the ground to the center of mass
  - θ is the roll angle from the ground
- The angle of the chair over a bump of size b is also a function of the width of the chair, 2e. $tan\theta = b/2e$ (2)
- Combining equations (1) and (2), it follows that $2e^2/\sqrt{h^2 - e^2} = b$
- Given that the wheel diameter is 26” (66cm) and the center of mass is estimated to sit at 0.75*66 = 49.5cm above the ground, h = 49.5cm.
- Plugging in the previously stated values for b and h and using an equation solver gives e = 0.26m.
- Assuming that the COG is in the center of the width of the chair, 0.26*2 = 0.54m is the minimum wheel width of our device to meet the established tipping requirement.
- 0.7m is chosen for comfort. This calculation also shows that tipping - a high severity failure mode - is of sufficiently low likelihood.
- In summary, Requirement 2.3 is met and the RPN of DFMEA item 11.1 has been reduced from 54 to 18.

F-3.2 Tipping in the pitch direction

Rationale for this calculation:

- Item 11.2 in the DMFEA rates tipping in the pitch direction as a high RPN concern (63) until further explored

- Requirement 2.4 states that the chair is able to roll over an obstacle of at least 30cm with one wheel without tipping

The governing equation for pitch tipping is derived from the FBD below

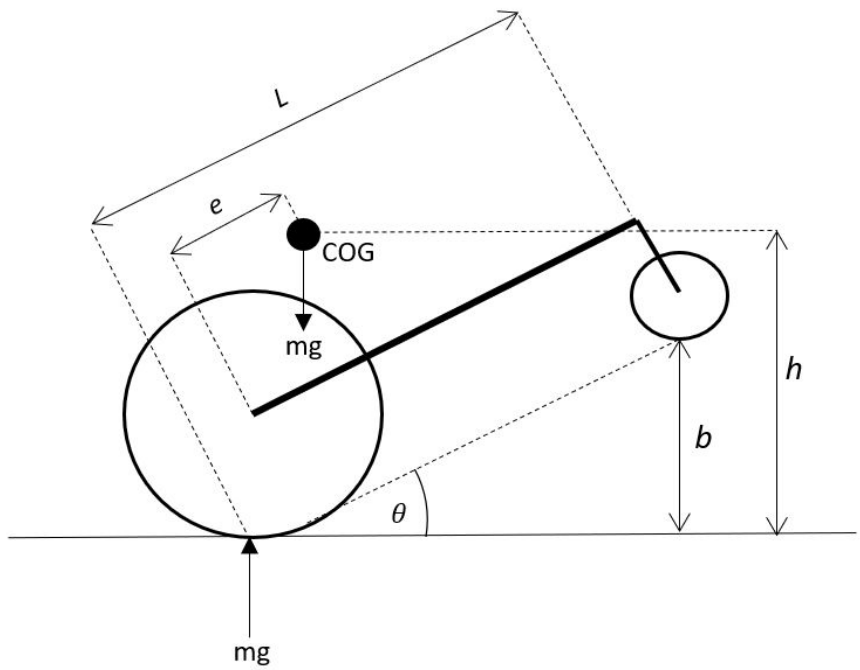

Figure 9: FBD for pitch tipping

- The wheelchair tips when center of mass is vertical above the point of contact.
- This occurs when $e/h = sin\theta$ (1), where
  - e is the horizontal distance from the contact wheel to the center of mass
  - h is the vertical distance from the ground to the center of mass
  - θ is the roll angle from the ground
- The angle of the chair θ over a bump size *b* is a function of the length L of the chair, $b = Ltan\theta$
- Based on the geometry of the chair and the anatomy of a person, assume that e = 0.2m.
- With h = 0.495m as above, θ = 24° based on equation (1)
- With b = 0.3m, L = 0.70m based on equation (2)
- Therefore, the minimum length of the chair to meet the tipping requirement is 0.70m

The following personnel are responsible for the calculations in Section F-3.

Authored by	Carson Hopkins	Carson Hopkins
	Name	Signature

Verified by Julia Zhuravleva

Name Signature

F-4 Bearing Calculations

F-4.1 Rationale for this Calculation

The rationale for this calculation is to specify the bearings holding the driven shafts to the frame. The figure below shows the shaft, its components, and the dimensions considered.

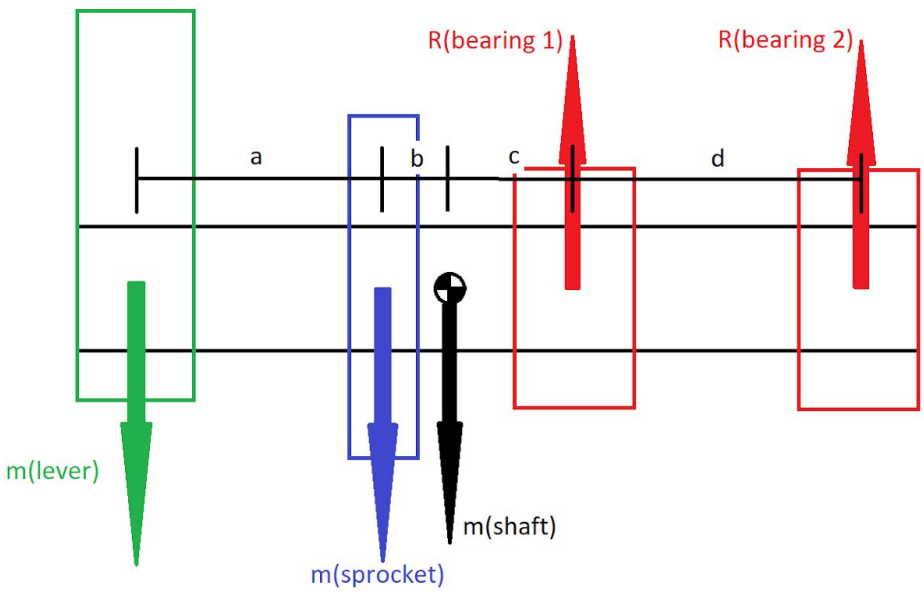

The analysis is divided into static and dynamic loading. For static, only the weights of the components are taken into account. For dynamics, the added force from the user torque input is added to the static forces. Note, the sprocket is approximated as a spur gear with 20° pressure angle.

F-4.2 Static Analysis

Moments are taken about bearing 1 to solve for reaction forces of bearing 2. And sum of forces are taken to solve for reaction forces of bearing 1. These reaction forces were used as the minimum static radial load our selected bearing must withhold. The governing equations are below, where “m” is the gravitational force from the mass of each component in [Newtons]:

$$\Sigma M_{B1} = 0 \;=\; m_{lever} \times (a+b+c) \;+\; m_{sprocket} \times (b+c) \;+\; m_{shaft} \times (c) \;+\; R_{B2} \times (d)$$

$$\Sigma F_y = 0 = -m_{lever} - m_{sprocket} - m_{shaft} + R_{B1} + R_{B2}$$

With:

- a = 80 mm
- b = 13.5 mm
- c = 31.5 mm
- d = 60 mm
- Component weights taken from the parts catalogues

Our results for static loading show:

- R_{B1} = 30 N
- R_{B2} = -16.7 N

F-4.3 Dynamic Analysis

For dynamic loading we add the 6.93 Nm torque input from user derived from sprocket calculations, estimate the sprocket as spur gear, and add its resulting force directly to $m_{sprocket}$. Note that the "spur gear" resulting force may not be in the same vertically downward direction as $m_{sprocket}$, but we add them this way for a conservative approach. With these assumptions we find the additional radial load due to user torque input. The governing equations are:

$$W_t = \frac{T_{user\ input}}{r_{sprocket}}$$
$$W_r = W_t tan(20°)$$
$$W = \sqrt{W_t^2 + W_r^2}$$

With:

- User torque input of 6.93 Nm
- Sprocket outer diameter of 37.8 mm, taken from parts catalogue

We get a resulting force W = 460.9 N

Similar to static analysis, moments are taken about bearing 1 to solve for reaction forces of bearing 2. And sum of forces are taken to solve for reaction forces of bearing 1. These reaction forces were used as the minimum dynamic radial load our selected bearing must withhold. The governing equations are below, "m" is the mass x gravity of each component in [Newtons]:

$$\Sigma M_{B1} = 0 = m_{lever} \times (a+b+c) + (m_{sprocket} + W) \times (b+c) + m_{shaft} \times (c) + R_{B2} \times (d)$$
$$\Sigma F_y = 0 = -m_{lever} - m_{sprocket} - W - m_{shaft} + R_{B1} + R_{B2}$$

With:

- a = 80 mm
- b = 13.5 mm

- c = 31.5 mm
- d = 60 mm
- Component weights taken from the parts catalogues

Our results for dynamic loading show:

- R_{B1} = 511.6 N
- R_{B2} = -37.46 N

F-4.3 Safety Factor

We selected the “Low-Profile Mounted Sealed Steel Ball Bearing” as referenced in Appendix G. This bearing specifies a static load rating of 15571 N, and a dynamic load rating of 3159 N. With these specifications and the maximum of the resulting bearing forces above, we calculate the safety factors:

$$sf_{static} = \frac{15571}{30} = 520$$
$$sf_{dynamic} = \frac{3159}{511.6} = 6$$

This shows that the bearing selected can withstand the subjected loads. The high dynamic safety factor shows that there is no need to do the extensive catalogue rating life method from Shigley’s Mechanical Engineering Design.

Authored by	Andrea Escoto	Andrea Escoto
	Name	Signature
Verified by	Carson Hopkins	Carson Hopkins
	Name	Signature

F-5 Lever Check

F-4.1 Rationale for this Calculation

The lever modelled in the final TrailRider design is a stainless steel pipe of ⅝” outer diameter and about 1/ . The rationale for this calculation is to check that this lever will be sufficient for operation. This analysis covers the lever in bending and fatigue.

F-4.1 Bending

The lever is subjected to bending due to the torque input from the user. To analyze this, the torque input from user is taken as the moment subjected on the lever. With this and the specified dimensions, the stress can be calculated.

$$\sigma = \frac{T_{user\ input} c}{I}$$
$$I = \frac{\pi(D^4 - d^4)}{4}$$

The result is bending stress σ = 43.1 Mpa the stainless steel properties [9] give a yield strength of 215 Mpa. This gives a high safety factor of 5.

F-4.1 Fatigue

The lever is subjected to fatigue from the repeated motion of the rider. To analyze this, the endurance limit is approximated to be half of the ultimate tensile strength of the stainless steel. This approximation is highly used in Shigley's. The same equations from bending are used to compute the bending stress, and since no parameters change, the cyclic bending stress is σ = 43.1 Mpa.

$$S_e = 0.5 S_{ut}$$

With an ultimate tensile strength S_{ut} = 505 MPa, the endurance limit is approximated as S_e = 252.5 Mpa. This is well below our bending stress and so infinite life is reached with a safety factor of 6.

Authored by	Andrea Escoto	
	Name	Signature
Verified by	Julia Zhuravleva	

F-6 References

[1] Lin, Jui-Te, et al. "Evaluation of Wheelchair Resistive Forces during Straight and Turning Trajectories across Different Wheelchair Configurations Using Free-Wheeling

Coast-down Test." *Journal of Rehabilitation Research and Development*, vol. 52, no. 7, 2015, pp. 763–774., doi:10.1682/jrrd.2014.10.0235.

[2] Wilson, David Gordon. "Understanding Pedal Power." *Volunteers in Technical Assistance* , no. 51, 9 Aug. 1986.

[3] DuVall, Jeremy. "3 Strength Standards for Men." *Men's Journal*, 21 May 2018, www.mensjournal.com/health-fitness/3-strength-standards-for-men/.

[4] Budynas, Richard Gordon., and J. Keith. Nisbett. *Shigley's Mechanical Engineering Design*. McGraw-Hill Higher Education, 2008.

[5] Vancouver Trails. "Hiking in Stanley Park near Downtown Vancouver, BC." *Vancouver Trails*, www.vancouvertrails.com/trails/stanley-park/.

[6] "Do You Have What It Takes to Use A GRIT Freedom Chair?" *Chair Institute*, 5 Oct. 2019, chairinstitute.com/grit-freedom-chair/.

[7] "Mean Height, Weight, Body Mass Index (BMI) and Prevalence of Obesity, by Collection Method and Sex, Household Population Aged 18 to 79, Canada, 2008, 2007 to 2009, and 2005." *Table 1*, 17 Aug. 2011, www150.statcan.gc.ca/n1/pub/82-003-x/2011003/article/11533/tbl/tbl1-eng.htm.

[8] "Friction and Friction Coefficients for Various Materials." *Engineering ToolBox*, www.engineeringtoolbox.com/friction-coefficients-d_778.html.

[9] http://asm.matweb.com/search/SpecificMaterial.asp?bassnum=mq304a

Appendix G: Cost of Goods

G-1 Overall Production Cost

The overall production cost is listed below. Please see the following sections in this Appendix for justification of these numbers.

Table 1: Overall production cost

Category	Cost
Tooling/startup	$0.00
Materials	$100
Labour	$1555
Off-Shelf Parts	$747.95
Undefined	$208
Total	**$2610.95**

G-2 Tooling and Setup Costs

Since most of our parts are off-the-shelf or hand-welded externally, there are no setup or tooling costs associated with the Trailrider. The customized, hand-welded components are the frame, propulsion lever, and chain covers. Each of these does not require special tooling beyond what is commonly available in an industrial machine shop.

G-3 Material Costs

The materials listed in Table 2 below are applicable only for parts requiring out of house fabrication. The references to the mass of each material can be found in Appendix I. The prices are conservative estimates based on Mcmaster prices. The frame was assumed to be 2.5” hollow steel tubing, with approximately 10 ft of material needed for the Trailrider.

Table 2: Material costs for manufactured products

Part / Assembly	Material	Mass (kg)	Price (ea.)	Qty.	Total Price
Frame	Stainless Steel	15	$70	1	$70
Propulsion Lever	Stainless Steel	0.56	$10	2	$20
Chain cover	ABS Plastic	0.6	$5	2	$10
Total					**$100**

G-4 Labour Costs

Table 3 lists out of house fabrication costs for certain parts/assemblies. Please note that the cost of metal assembly (i.e. welding of frame) is included in this table as the fabrication cost. For mechanical assembly costs of the entire Trailrider, refer to Table 4. Labour and fabrication costs are estimated as the average hourly mechanical technician compensation as per Neuvoo. Please note also, that the frame includes items such as the foot plate, and the handlebars. The 3D printing costs are 35 cents per gram according to research.

Table 3: Fabrication costs

Part / Assembly	Type	Cost/hr	Time (hr)	Total Cost
Frame	Milling/ Welding	$130.00	6	$780.00
Frame	Painting	$60.00	2.0	$120.00
Propulsion Lever	Milling/ Welding	$70.00	1.0	$70.00
Chain cover	3D Printing	$210.00	N/A	$210.00
Total				**$1180.00**

The term ‘general assembly’ refers to the procedures required to put together the critical components of the Trailrider. For example, this includes fastening the drivetrain to the frame, attaching the handlebar grips, attaching velcros to the frame, etc. Each process is listed separately and given a conservative time estimate. The general assembly procedure is assumed to be done in-house at BCMOS.

Table 4: General assembly costs per Trailrider

Assembly Procedure	Cost/hr	Time (hr)	Total Cost
Castor wheel to front fork	$30.00	1.0	$30.00
Drivetrain to frame	$30.00	6.0	$180.00
Velcros to frame seat	$30.00	0.5	$15.00
Braking system	$30.00	3.0	$90.00
Miscellaneous Other	$30.00	1.0	$30.00
Total			**$345**

Additional cost estimates have been given for packaging costs of the Trailrider to the customer in Table 5. The shipping distance is conservatively estimated from Vancouver to Kelowna, assuming that the Trailrider is only shipped in BC during its first release.

The packing cost is given in Table 5 below is a conservative estimate determined as per the approximate dimensions of the frame and disconnected wheels.

Table 5: Packaging and shipping costs per Trailrider

Part / Assembly	Dimensions	Mass (lb)	Cost
Packaging box	36” x 36” x 50”	60	$30.00
Total			**$30.00**

The total labour costs are the added values from Tables 3, 4, 5, making a total of **$1555.**

G-5 Undefined Costs

Table 6: Undefined costs per Trailrider

Part Category	Conservative Cost
Small parts (fasteners, brake housing, bearings, rivets, collars, etc)	$100.00
Supporting brackets	$45.00
Velcros, hand grips	$23.00
Seat Cushion	$4.00
Total	**$208.00**

G-6 Off-Shelf Costs

The off-shelf costs listed below in Table 7 are limited to the critical systems that we focused on; drivetrain and rear-wheel assembly.

Table 7: Off-the-shelf component costs per Trailrider

Reference #	Part Name	Use	PN	Qty.	Unit cost (CAD)	Total Price
1	17T Sprocket for #40 ANSI Roller Chain	Driving sprocket	6280K711	2	$28.50	$57.00
2	Low-profile mounted steel ball bearings	Connect driving shaft to frame	5913K62	4	$14.52	$58.08
3	Ball Bearing	For chain cover	60355K602	4	$11.44	$45.76
4	⅝” Strut Clamp	Attach lever to sprocket	U-KDST0.63	2	$34.32	$68.64
5	#40 ANSI Roller Chain, 4ft	Drivetrain	6261K173	2	$24.06	$48.12
6	Continental 2018 Cross King 26" ProTection MTB Tire	Rear-wheel assembly	0101483	2	$69.95	$139.9
7	Alex MD21 26" 32H Disc Rear Wheel - Unisex	Rear-wheel assembly	6005-371	2	$134.95	$269.9
8	SunRace MF-M20 5 Speed 14-28T Freewheel	Acts as 24T driven sprocket	5019-493	2	$12.00	$24.00
9	6” Rubber Castor Wheel	Front wheel	4429T31	1	$36.55	$36.55
	Total					**$747.95**

Off-the-shelf reference # links:

1) https://www.mcmaster.com/6280k711
2) https://www.mcmaster.com/5913k62
3) https://www.mcmaster.com/60355k602
4) https://us.misumi-ec.com/pdf/fa/2009/inch_p457.pdf
5) https://www.mcmaster.com/6261K173
6) https://www.biketiresdirect.com/product/continental-2018-cross-king-26-protection-mtb-tire?fltr=3793
7) https://www.mec.ca/en/product/6005-371/MD21-26%22-32H-Disc-Rear-Wheel
8) https://www.mec.ca/en/product/5019-493/MF-M20-5-Speed-14-28T-Freewheel
9) https://www.mcmaster.com/4429t31

Other References

http://3dsmith.ca/prints?fbclid=IwAR2BV0hguk_fXpLbQq_gQ_el1qx_eWh6-Nj6kubmwkg4HtlR7n2FrNQdsK4 (3D printing costs)

http://neuvoo.ca/salary/?job=mechanical+technician (mechanical technician salary)

https://www.uline.ca/Product/Detail/S-15109/Corrugated-Boxes-Heavy-Duty/36-x-36-x-40-76-2-piece-Telescopic-Bulk-Cargo-Box (packaging costs)

Appendix H: Failure and Safety

For our DFMEA we started off by identifying components that could fail during operation of the device. This paragraph will use the chain as an example component to explain the process of completing the DFMEA chart. After a component is identified, we looked at the different effects that failure of the component would have. For the chain we identified two major effects that failure would have: loss of rider propulsion and loss of rider control. For each effect, we assigned a severity rating out of 10 (from the Mech 223 textbook). “Loss of rider propulsion” received a rating of 7 which means the effect is harmful, causing major degradation in device performance. “Device goes out of control” received a rating of 8 which means the effect is very harmful causing the device to lose primary function. Afterwards, we looked at possible causes for each failure and assigned an occurrence rating out of 10 (also from the Mech 223 textbook). “Link-plate fatigue” and “roller fatigue” received a 7 which means the likelihood is occasional. Excessive wear/galling received and 8 which means the likelihood is probable. Multiplying the severity rating and the occurrence rating we get a risk priority number out of 100. All failures that received a risk priority number of 50 or above were flagged so that action is taken to reduce the risk. Once action is taken, the process is repeated to see if the new risk priority number is acceptable. In the case of the chain, calculations were done to find the suitable chain thickness giving us a new risk priority number of 8.

Table 1: DFMEA #1 October 23

	Severity		Occurrence		Detection		
Failure Mode	**Effect**	**S**	**Cause**	**O**	**Control**	**D**	**RPN**
Flat tire	Loss of shock absorbtion (S=7)	8	Tire punctured by sharp object	3	None	10	240
	Less efficient rolling (S=7)		Tube pinched during installation	2	None	10	160
	Damage to rims (S=8)						
Brake pads wear through	Loss of braking (S=8)	8	Brake pads not replaced often enough	2	None	10	160
	Damage to brake rotor (S=8)						
Ratchet teeth breaks	Loss of rider propulsion (S=8)	9	Fatigue	5	Selection of material, finishing	10	450
	Loss of vehicle control (S=9)		System hit by outside source (eg. rock, twigs)	10	Protective casing	1	90
Ratchet teeth wear	Loss of efficiency (S=7)	8	System hit by outside source (eg. rock, twigs)	10	Protective casing	10	800
	Ratchet more susceptible to breaking (S=8)		Underestimation of expected cycles	3	None	10	240
Wheel buckles	Wheel unable to roll (S=8)	8	Wheel frame absorbs too much shock. Over its yield strength	5	None		0
	Loss of efficiency (S=6)		Impact with rock	10	None	10	800
Chair back support break	Rider experience shock (S=9)	9	Fatigue	5	None	10	450
	Device can not support rider (S=7)		Lock/joint disengages	5			0
	Rider inconvenienced (S=3)						
Sherpa handle breaks	No sherpa input (S=4)	4	Fatigue	5	None	10	200

Table 2: DFMEA #2 October 28 (Part 1 of 2)

	Severity		Occurrence			Recommended Action		
	Effect	S	Cause	O	RPN	Recommended Action	Person Responsible	Date Required
Flat tire	Loss of shock absorbtion (S=7)	8	Tire punctured during operation	10	80	Choose tire resistant to puncture.	Stephen	Nov 8
	Less efficient rolling (S=7)		Tube pinched during operation	2	16			
	Damage to rims (S=8)		Tire not inflated properly	2	16			
Brake pads wear through	Loss of braking (S=8)	8	Breakpads not replaced often enough	2	16			
	Damage to brake rotor (S=8)							
Ratchet teeth breaks	Loss of rider propulsion (S=8)	9	Fatigue	5	45			
	Loss of vehicle control (S=9)		System hit by outside source (eg. rock, twigs)	7	63	Add proective casing.	Friend	Nov 8
Ratchet teeth wear	Loss of efficiency (S=7)	8	System hit by outside source (eg. rock, twigs)	7	56	Add proective casing.	Julia	Nov 8
	Ratchet more susceptible to breaking (S=8)		Underestimatio n of expected cycles	3	24			
Wheel buckles	Wheel unable to roll (S=8)	8	Wheel frame absorbs too much shock. Over its yield strength	5	40			
	Loss of efficiency (S=7)		Impact with rock	7	56	Make wheel resistant to impact loading.	Andrea	Nov 8
Chair back support break	Rider experience shock (S=9)	9	Fatigue	5	45			
	Device can not support rider (S=7)		Lock/joint disengages	5	45			
	Rider inconvenienced (S=3)							

Table 3: DFMEA #2 October 28 (Part 2 of 2)

	Severity		Occurrence			Recommended Action		
	Effect	S	Cause	O	RPN	Recommended Action	Person Responsible	Date Required
Sherpa handle breaks	No sherpa input (S=4)	4	Fatigue	5	20			
Sprocket breaks	Loss of rider propulsion (S=8)	8	Fatigue	5	40			
	Loss of rider control (S=8)		Foreign object gets stuck (eg. rocks, twigs)	7	56	Add proective casing.	Lukas	Nov 8
Chain breaks	Loss of rider propulsion (S=8)	8	Link-plate fatigue	7	56	Design thick enough chain.	Stephen	Nov 8
	Loss of rider control (S=8)		Roller fatigue	7	56	Design thick enou	Stephen	Nov 8
			Excessive wear/galling	8	64	Design thick enou	Stephen	Nov 8
Ratchet handle breaks	Rider inconvenienced (S=3)	6	Bending	3	18			
	More effort fro propulsion, lower efficiency (S=6)		Fatigue	4	24			
Device tips	Injury to rider (S=9)	9	Centre of gravity goes out base of support.	6	54	Design CofG and BofS for desired inclines.	Carson	Nov 8

Table 4: DFMEA #3 November 8 (Part 1 of 3)

Label		Label	Severity		Occurrence			Recommended Action			Action Results			
			Effect	Severity	Cause	Occurrence	RPN	Recommended Action	Person Responsible	Date Required	Action Taken	Severity	Occurence	RPN
1	Flat tire	1	Loss of shock absorbtion (S=7)	8	Tire punctured during operation	10	80	Choose tire resistant to puncture.	Stephen	Nov 8	Tires are puncture resisitant.	8	3	24
		2	Less efficient rolling (S=7)		Tube pinched during operation	2	16							
		3	Damage to rims (S=8)		Tire not inflated properly	2	16							
		4												
		5												
2	Brake pads wear through	1	Loss of braking (S=8)	8	Breakpads not replaced often enough	2	16							
		2	Damage to brake rotor (S=8)											
		3												
		4												
		5												
3	Ratchet teeth breaks	1	Loss of rider propulsion (S=8)	9	Fatigue	5	45							
		2	Loss of vehicle control (S=9)		System hit by outside source (eg. rock, twigs)	7	63	Add protective casing.	Friend	Nov 8	Designed a case for sprocket and chain	9	1	9
		3												
		4												
		5												
4	Ratchet teeth wear	1	Loss of efficiency (S=7)	8	System hit by outside source (eg. rock, twigs)	7	56	Add protective casing.	Friend	Nov 8	Designed a case for sprocket and chain	8	1	8
		2	Ratchet more susceptible to breaking (S=8)		Underestimation of expected cycles	3	24							
		3												
		4												
		5												

Table 5: DFMEA #3 November 8 (Part 2 of 3)

Label		Label	Severity		Occurrence			Recommended Action			Action Results			
			Effect	Severity	Cause	Occurrence	RPN	Recommended Action	Person Responsible	Date Required	Action Taken	Severity	Occurence	RPN
	Wheel buckles	1	Wheel unable to roll (S=8)	8	Wheel frame absorbs too much shock. Over its yield strength	5	40							
		2	Loss of efficiency (S=7)		Impact with rock	7	56	Make wheel resistant to impact loading.	Stephen	Nov 8	Wheelchair will not incure greater impacts than a bicylce would so a standard rim should be strong enough.	8	2	16
		3												
		4												
		5												
	Chair back support break	1	Rider experience shock (S=9)	9	Fatigue	5	45							
		2	Device can not support rider (S=7)		Lock/joint disengages	5	45							
		3	Rider inconvenienced (S=3)											
		4												
		5												
	Sherpa handle breaks	1	No sherpa input (S=4)	4	Fatigue	5	20							
		2												
		3												
		4												
		5												
	Sprocket breaks	1	Loss of rider propulsion (S=8)	8	Fatigue	5	40							

Table 6: DFMEA #3 November 8 (Part 3 of 3)

Label		Label	Severity		Occurrence			Recommended Action			Action Results			
			Effect	Severity	Cause	Occurrence	RPN	Recommended Action	Person Responsible	Date Required	Action Taken	Severity	Occurence	RPN
9	Chain breaks	1	Loss of rider propulsion (S=7)	8	Link-plate fatigue	7	56	Design thick enough chain.	Friend	Nov 8	Did calculations and choose sprocket that prevents this.	8	1	8
		2	Device goes out of control (S=8)		Roller fatigue	7	56	Design thick enough chain.	Friend	Nov 8	Did calculations and choose sprocket that prevents this.	8	1	8
		3			Excessive wear/galling	8	64	Design thick enough chain.	Friend	Nov 8	Did calculations and choose sprocket that prevents this.	8	1	8
		4												
		5												
10	Ratchet handle breaks	1	Rider inconvenienced (S=3)	6	Bending	3	18							
		2	More effort fro propulsion, lower efficiency (S=6)		Fatigue	4	24							
		3												
		4												
		5												
11	Device tips	1	Injury to rider (S=9)	9	Centre of gravity goes out base of support.	6	54	Design CofG and BofS for desired inclines.	Carson	Nov 8	Design wheel base so that one wheel can roll over a 20cm height obstacle without tipping.	9	2	18
		2												
		3												
		4												
		5												

Appendix I: Life Cycle Analysis

Our Life cycle analysis is defined within some boundaries. We decided to focus on the environmental impact (specifically global warming potential) in material extraction and manufacturing of our device's three key parts: the drivetrain, the three wheels for stability, and the frame that connects them all together. Together, these parts make up approximately over 80% of the total mass of our design, making the analysis a good approximation for the full product. This percentage approximation was derived from inspection and estimation of our design model and the GRIT Freedom chair specifications, which our design geometry is similar to. The full device and its parts were analyzed for material excavation and manufacture GWP, lifetime operation and maintenance cost, and end of life disposal.

I-1 Material Extraction

The analysis for material extraction includes references from our off-the-shelf parts list in Appendix G, and the known geometry of existing GRIT chair. For the frame, the GRIT chair was used for approximation since the material and geometry are similar. The ratchet mechanism is accounted for in the freehub of the wheels. The parts considered were mostly made of aluminum, steel, or rubber, so these are the materials we focus on. The table below shows the equivalent kg of C02 emissions for each material extracted, and the total for the full product. Therefore, our TrailRider's GWP for material extraction is 34.8 kg of C02.

Table 1: GWP in Material Extraction

Part \ Material	**Aluminum (kg)**	**Stainless Steel (kg)**	**Rubber (kg)**	**Total Part Weight (kg)**
Frame	0	15	0	15
Wheels (x2)	0.122	1.6	1.34	3.062
Chains (x2)	0	0.5	0	0.5
Sprocket set (x2)	0	1.464	0	1.464
Levers (x2)	0	1.12	0	1.12
Total Material Weight (kg)	0.122	19.684	1.34	**21.14**
CO2 conversion (kg/kg)	8.14	1.77	3.18	-
Total CO2 (kg)	**0.99**	**34.84**	**4.26**	**40.09**

References

- https://www.winnipeg.ca/finance/findata/matmgt/documents/2012/682-2012/682-2012_Appendix_H-WSTP_South_End_Plant_Process_Selection_Report/Appendix%207.pd
- https://weightweenies.starbike.com/listings.php

I-2 Manufacturing

The analysis for manufacturing is estimated only from 1.5x manufacturing of a bike frame, two wheels and the chains due to lack of time and resources. We multiply this approximation by 1.5 to account for the manufacture of a more complete product, noting that our TrailRider has two sets of drivetrain and a bigger frame compared to a bike. From research, it takes 110 kg of CO2 to manufacture for every kg of frame, two wheels, and chains combined. We can approximate the GWP for manufacturing a full chair by multiplying 110 kg CO2 with our total weight 21.15 kg and the factor 1.5. This results in a total of 3489.75 kg of CO2 emissions. Note that this is a very rough approximation, but helpful to see the order of magnitude.

Table 2: GWP in Manufacturing

Part	CO2 per kg	Total CO2 (kg) x1.5
Frame	63.4	1426.5
Wheels	10.8	49.6044
Chains	7.66	5.745
Total	-	**1481.85**

<u>References</u>

- https://dukespace.lib.duke.edu/dspace/bitstream/handle/10161/8483/Duke_MP_Published.pdf

I-3 Operation and Maintenance Cost

Operation and maintenance will only account for lubrication of the chains. We omit replacing any parts because the four hours a week (two 2-hour rides on weekends) of operation for 10 years in an unpaved bike trail have been taken into account in our engineering calculations and is sufficient for no failure. Our maintenance costs will consider lubricating the chains, chain inspection and potential replacement, and inflating the wheels.

Chains are expected to be one of the parts requiring the most maintenance. It is said to be best practice to clean and lubricate the chains about once a month. Each chain needs 20 mL of lubrication. For 10 years of operation, this comes down to 120 months. In total we would need 4800mL of chain lube. Chain lube costs about $13 for 120 mL. This means 10 years of chain lubrication will cost a total $520. For safety and efficiency, it is required to inspect the chains every three months for any wear and in need of replacement. Inspection can be done at home at no cost. As a conservative approach, replacing chains may be estimated once a year. Chain replacing service costs about $15, and the chains itself are together $48.12. This totals to $63.12 each year. So, this totals to $631.20 for chain replacement for 10 years.

Another maintenance to consider is inflating the tires. This is fairly simple, and can be done by the owner. A one time cost of $42 for a bike pump, since our chair's wheels are simply mountain bike wheels.

Table 3: GWP in Material Extraction

Maintenance (10 years)	Cost
Chain Lubrication	$520
Chain Replacement	$631.20
Tire Inflation	$42
Total Maintenance Cost	$1,193.20

References

- https://www.mec.ca/en/product/5063-555/Wet-Chain-Lube-120ml (chain lube price)
- http://www.bikesforall.ca/bike-service/ (chain replace service)
- https://www.mec.ca/en/product/5060-607/Apex-Floor-Pump?colour=ANC00&gclid=CjwKCAiA8K7uBRBBEiwACOm4d973JtYIRICeAfcIse0ci8SxgUsz2Vc5o2agHFohtC-ItSTiTOEzeBoCKcsQAvD_BwE (bike pump)

I-5 End of Life

Because OurTrailRider is mostly made of steel and aluminum, we can scrap these and reuse them for other applications. The most concerning parts in our scope are the rubber tires. Tires are known to fill up landfill space. There are efforts to reusing them into new tires, but only 5% of the weight can be integrated into a new tire, but this new tire is also weaker and less efficient. For the rest of the TrailRider, it is possible to bring this into a transfer station where they will sort out the metals and the tires and other recyclable materials.
https://en.wikipedia.org/wiki/Tire_recycling

Appendix J: Prototype Testing

Certain components/subsystems of our TrailRider are deemed out of our project scope for analysis due to time constraints, and so we did not calculate, quantify, or analyze these parts. Yet among these out of scope parts, we have identified some that are still important for proper end product performance. For these, we have decided to verify and validate using prototype testing. From our requirements, we have identified the ergonomics and durability requirements to be out of our analysis scope. From our DFMEA, we identified that fatigue of parts to be the most occuring and uncertain risks (ie. they showed up the most and we didn't do analysis on it).

J-1 Ergonomics

Ergonomics states that "the device comfortably seats a parpalegic rider for a minimum of 2 hours". We will test this by building a prototype of the seat configuration and lever propulsion by using a standard wheelchair and a double pronged L-bar/pipe on either sides equipped with weights on the bottom end. See figure 1 for a sketch of this lever prototype. These L-bars/pipes mimic our TrailRider's lever propulsion at a low cost, and can be easily moved to test the most ergonomic lever placement. Parapeligic volunteers will test a lever placement of the seat configuration for 2 hours, and alternate to the next lever placement the next day. This will go on until all the lever placements have been tested by each volunteer. The volunteers will rank and comment on each lever placement,and we can analyze these results for the most ergonomic lever placement. The volunteers are also welcome to comment on the seat configuration, if any improvements from a standard wheelchair seat are needed. Testing is expected to occur for a week, and we aim for about 50 volunteers, with one prototype. Multiple volunteers will be scheduled to test each day, and availability will vary greatly so this area has lots of uncertainty. Alternatively, we could produce multiple prototypes and test in a smaller duration. Overall, this prototype testing will cost approximately:

- $40 a week for a rental wheelchair
- $20 for two lever prototypes (plastic)
- $10 for strap on weights

This totals to $70 to prototype test for ergonomics.

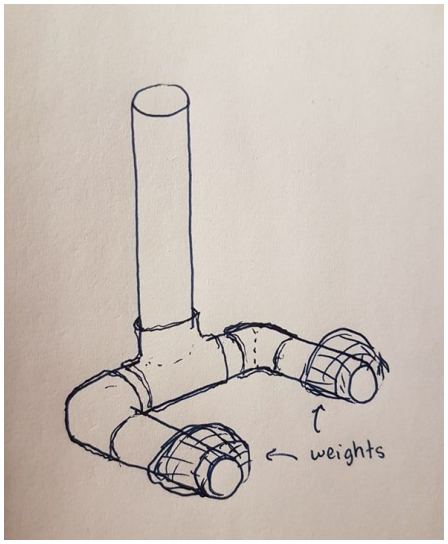

Figure 1

J-2 Fatigue

The durability requirement “the device has a predicted service life of at least 10 years with regular maintenance” aligns with the fatigue risks from our DFMEA. We will test the driven and driving shafts and lever in fatigue because these were parts out of our engineering calculations scope, and are identified to be at risk of fatigue. It is also quoted as good practice to test parts for fatigue. This can be done using full size prototype of the shafts complete with notches if needed, and full size lever. The shafts will be subjected to a rotational cyclic loading, and the lever subjected to cyclic bending load. The parts will be reconfigured as results suggest. The cost will approximately be in thousands of dollars because of the fatigue test machine, but if we were to rent the test machine or borrow UBC’s the cost will greatly reduce to hundreds of dollars. On average, testing machines cost about $5000. For renting, we can approximate 1/50th of this per hour, so $100 per hour. The duration of test will be pretty short (in a matter of hours) considering fatigue test machines can operate at very high frequency. We will approximate the duration for testing to be 5 hours maximum. Add this to the $70 for the parts cost, and this totals to $570 for testing fatigue-able components.

J-3 Frame

Another prototype testing we plan to do is for the frame. Our main concern is the integrity of the of the frame as it is made of Steel and no calculations could be done on its geometry in the time given. We will do a simple static load test on a full size frame prototype by adding weights on top. Since we are modelling for the TrailRider, this new frame should also be able to carry the maximum weight capacity of 108 kg. The cost to manufacture the frame should be around a few hundred dollars, estimated from bike frames. The testing would occur within a day. The frame costs $780 to manufacture, and taking the $100 per hour approximation of renting an

engineering machine from fatigue testing above, and testing for an hour. We get a total of $880 to test the frame. Assuming we only do one iteration.

It will also be necessary to test a full scale prototype of the complete design before product release for final verification and reliability. This cost should equal the total production cost for the final product, plus any additional testing costs not yet in the scope of this analysis. After verification, we can test for other device specifications such as mechanical efficiency and final weight limit with the full scale complete prototype.

Table 1: Prototype Test Cost

Prototype Test	**Cost**
Ergonomics	$70
Fatigue	$570
Frame	$880
Total	$1520

References

- https://www.abbeymedicalsupplies.com/rentals (wheelchair rental)
- http://www.streetsie.com/trailrider/ (existing TrailRider weight capacity)

Appendix K: Project Management Charts

The following Gantt chants revisions are from the beginning to the end of project. Initially, the Gantt Charts were fairly vague because the group did not have a solid idea how long each milestone would take. As the project neared to its end, the Gantt charts became more sophisticated.

Task Name	Duration	Start	Finish	Predeces	Resource Names
Needs Assessment					
Research BCMOS background and their need statements. Clarify in Q&A section.	5 days	Mon 19-09-09	Fri 19-09-13		
Research current wheelchair specifications	5 days	Mon 19-09-09	Fri 19-09-13		
Research available markets	5 days	Mon 19-09-09	Fri 19-09-13		
Research other products	5 days	Mon 19-09-09	Fri 19-09-13		
Choose our market stakeholders and determine needs	5 days	Mon 19-09-09	Fri 19-09-13		
Create preliminary target specifications	5 days	Mon 19-09-09	Fri 19-09-13		
Determine project constraints	5 days	Mon 19-09-09	Fri 19-09-13		
Determine overall project scope	5 days?	Mon 19-09-09	Fri 19-09-13		
Concept Generation					
Function decomposition	2 days	Fri 19-09-13	Mon 19-09-16		
C-sketch round 1	1 day	Mon 19-09-16	Mon 19-09-16	2,3,4,7,8,9	
First set of concept combination	1 day	Wed 19-09-18	Wed 19-09-18	12	
C-sketch round 2	1 day	Wed 19-09-18	Wed 19-09-18	12	
Concept combination (complete concepts)	1 day	Fri 19-09-20	Fri 19-09-20	14	
DFMEA 1	1 day	Fri 19-09-20	Fri 19-09-20		
Concept Evaluation					
Winnowing	1 day	Mon 19-09-23	Mon 19-09-23		
Ranking - Pugh Chart	1 day	Mon 19-09-23	Mon 19-09-23		
Scoring - WDM	1 day	Wed 19-09-25	Wed 19-09-25	19,18	
Optimization	2 days	Fri 19-09-27	Mon 19-09-30	20	
DFMEA 2	3 days	Mon 19-09-30	Wed 19-10-02		
Concept selection presentation	6 days	Wed 19-10-02	Wed 19-10-09		
Design					
Design					
First set of iterations (of final concept)	1 day	Fri 19-10-11	Fri 19-10-11		
Calculations & stress analysis	5 days	Mon 19-10-14	Fri 19-10-18		
Preliminary costing & LCA	5 days	Mon 19-10-14	Fri 19-10-18		
Second set of iterations	5 days	Mon 19-10-21	Fri 19-10-25		
Secondary costing & LCA	5 days	Mon 19-10-21	Fri 19-10-25		
DFMEA 3	3 days	Wed 19-10-23	Fri 19-10-25		
Complete detailed CAD of key components	5 days	Mon 19-10-21	Fri 19-10-25		
Closeout					
Report mock deadline	21 days	Fri 19-10-11	Fri 19-11-08		
Report actual deadline	26 days	Fri 19-10-11	Fri 19-11-15		
Presentation mock deadline	6 days	Fri 19-11-08	Fri 19-11-15		
Presentation actual deadline	9 days	Fri 19-11-08	Wed 19-11-20		
Logbook submission	2 days	Thu 19-11-28	Fri 19-11-29		

Figure 1: Initial Gantt chart from September 8 - 15

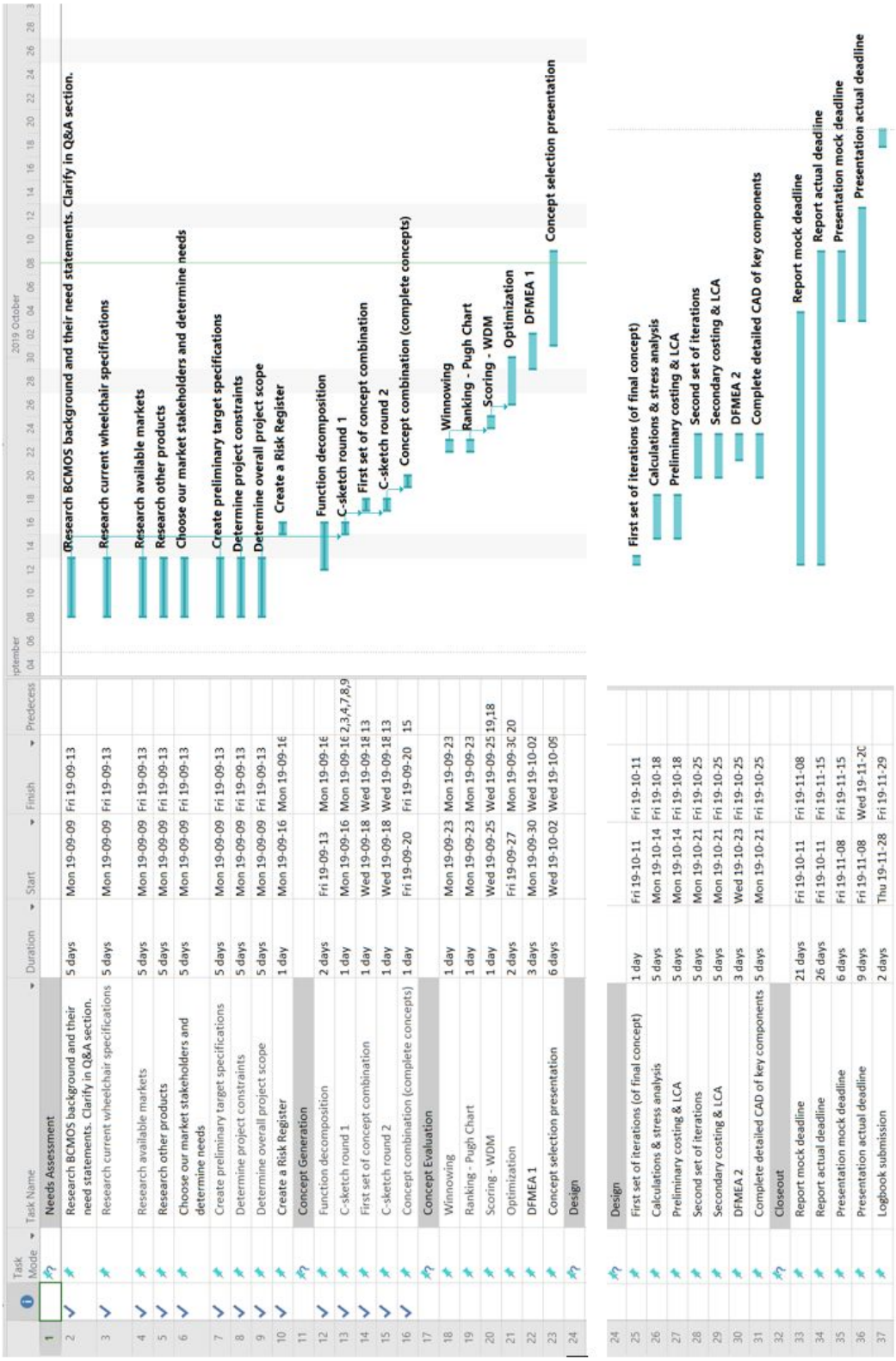

	Task Name	Duration	Start	Finish	Predecess
1	Needs Assessment				
2	Research BCMOS background and their need statements. Clarify in Q&A section.	5 days	Mon 19-09-09	Fri 19-09-13	
3	Research current wheelchair specifications	5 days	Mon 19-09-09	Fri 19-09-13	
4	Research available markets	5 days	Mon 19-09-09	Fri 19-09-13	
5	Research other products	5 days	Mon 19-09-09	Fri 19-09-13	
6	Choose our market stakeholders and determine needs	5 days	Mon 19-09-09	Fri 19-09-13	
7	Create preliminary target specifications	5 days	Mon 19-09-09	Fri 19-09-13	
8	Determine project constraints	5 days	Mon 19-09-09	Fri 19-09-13	
9	Determine overall project scope	5 days	Mon 19-09-09	Fri 19-09-13	
10	Create a Risk Register	1 day	Mon 19-09-16	Mon 19-09-16	
11	Concept Generation				
12	Function decomposition	2 days	Fri 19-09-13	Mon 19-09-16	
13	C-sketch round 1	1 day	Mon 19-09-16	Mon 19-09-16	2,3,4,7,8,9
14	First set of concept combination	1 day	Wed 19-09-18	Wed 19-09-18	13
15	C-sketch round 2	1 day	Wed 19-09-18	Wed 19-09-18	13
16	Concept combination (complete concepts)	1 day	Fri 19-09-20	Fri 19-09-20	15
17	Concept Evaluation				
18	Winnowing	1 day	Mon 19-09-23	Mon 19-09-23	
19	Ranking - Pugh Chart	1 day	Mon 19-09-23	Mon 19-09-23	
20	Scoring - WDM	1 day	Wed 19-09-25	Wed 19-09-25	19,18
21	Optimization	2 days	Fri 19-09-27	Mon 19-09-30	20
22	DFMEA 1	3 days	Mon 19-09-30	Wed 19-10-02	
23	Concept selection presentation	6 days	Wed 19-10-02	Wed 19-10-09	
24	Design				
25	First set of iterations (of final concept)	1 day	Fri 19-10-11	Fri 19-10-11	
26	Calculations & stress analysis	5 days	Mon 19-10-14	Fri 19-10-18	
27	Preliminary costing & LCA	5 days	Mon 19-10-14	Fri 19-10-18	
28	Second set of iterations	5 days	Mon 19-10-21	Fri 19-10-25	
29	Secondary costing & LCA	5 days	Mon 19-10-21	Fri 19-10-25	
30	DFMEA 2	3 days	Wed 19-10-23	Fri 19-10-25	
31	Complete detailed CAD of key components	5 days	Mon 19-10-21	Fri 19-10-25	
32	Closeout				
33	Report mock deadline	21 days	Fri 19-10-11	Fri 19-11-08	
34	Report actual deadline	26 days	Fri 19-10-11	Fri 19-11-15	
35	Presentation mock deadline	6 days	Fri 19-11-08	Fri 19-11-15	
36	Presentation actual deadline	9 days	Fri 19-11-08	Wed 19-11-20	
37	Logbook submission	2 days	Thu 19-11-28	Fri 19-11-29	

Figure 2: Revised Gantt chart from September 16 - 22

Task Name	Duration	Start	Finish	Predecess
Needs Assessment				
Research BCMOS background and their need statements. Clarify in Q&A section.	5 days	Mon 19-09-09	Fri 19-09-13	
Research current wheelchair specifications	5 days	Mon 19-09-09	Fri 19-09-13	
Research available markets	5 days	Mon 19-09-09	Fri 19-09-13	
Research other products	5 days	Mon 19-09-09	Fri 19-09-13	
Choose our market stakeholders and determine needs	5 days	Mon 19-09-09	Fri 19-09-13	
Create preliminary target specifications	5 days	Mon 19-09-09	Fri 19-09-13	
Determine project constraints	5 days	Mon 19-09-09	Fri 19-09-13	
Determine overall project scope	5 days	Mon 19-09-09	Fri 19-09-13	
Create a Risk Register	1 day	Mon 19-09-16	Mon 19-09-16	
Concept Generation				
Function decomposition	2 days	Fri 19-09-13	Mon 19-09-16	
C-sketch round 1	1 day	Mon 19-09-16	Mon 19-09-16	2,3,4,7,8,9
First set of concept combination	1 day	Wed 19-09-18	Wed 19-09-18	13
C-sketch round 2	1 day	Wed 19-09-18	Wed 19-09-18	13
Concept combination (complete concepts)	1 day	Fri 19-09-20	Fri 19-09-20	15
Concept Evaluation				
Winnowing	1 day	Mon 19-09-23	Mon 19-09-23	
Ranking - Pugh Chart	1 day	Mon 19-09-23	Mon 19-09-23	
Scoring - WDM	1 day	Wed 19-09-25	Wed 19-09-25	19,18
Optimization	2 days	Fri 19-09-27	Mon 19-09-30	20
DFMEA 1	3 days	Mon 19-09-30	Wed 19-10-02	
Concept selection presentation	6 days	Wed 19-10-02	Wed 19-10-09	
Design				
First set of iterations (of final concept)	1 day	Fri 19-10-11	Fri 19-10-11	
Calculations & stress analysis	5 days	Mon 19-10-14	Fri 19-10-18	
Preliminary costing & LCA	5 days	Mon 19-10-14	Fri 19-10-18	
Second set of iterations	5 days	Mon 19-10-21	Fri 19-10-25	
Secondary costing & LCA	5 days	Mon 19-10-21	Fri 19-10-25	
DFMEA 2	3 days	Wed 19-10-23	Fri 19-10-25	
Complete detailed CAD of key components	5 days	Mon 19-10-21	Fri 19-10-25	
Closeout				
Report mock deadline	21 days	Fri 19-10-11	Fri 19-11-08	
Report actual deadline	26 days	Fri 19-10-11	Fri 19-11-15	
Presentation mock deadline	6 days	Fri 19-11-08	Fri 19-11-15	
Presentation actual deadline	9 days	Fri 19-11-08	Wed 19-11-20	
Logbook submission	2 days	Thu 19-11-28	Fri 19-11-29	

Figure 3: Revised Gantt chart from September 23 - 29

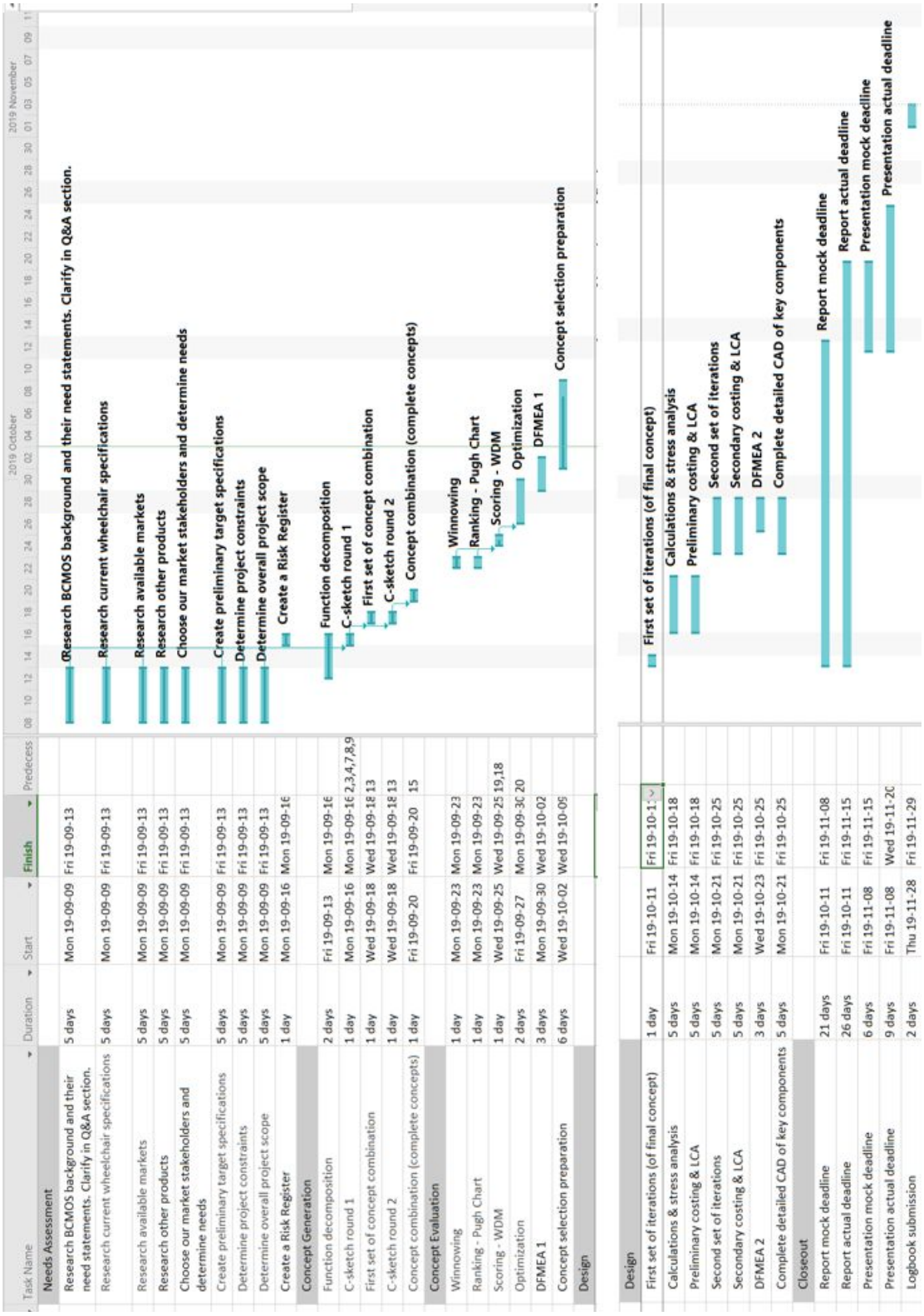

Figure 4: Revised Gantt chart from September 29 - October 6

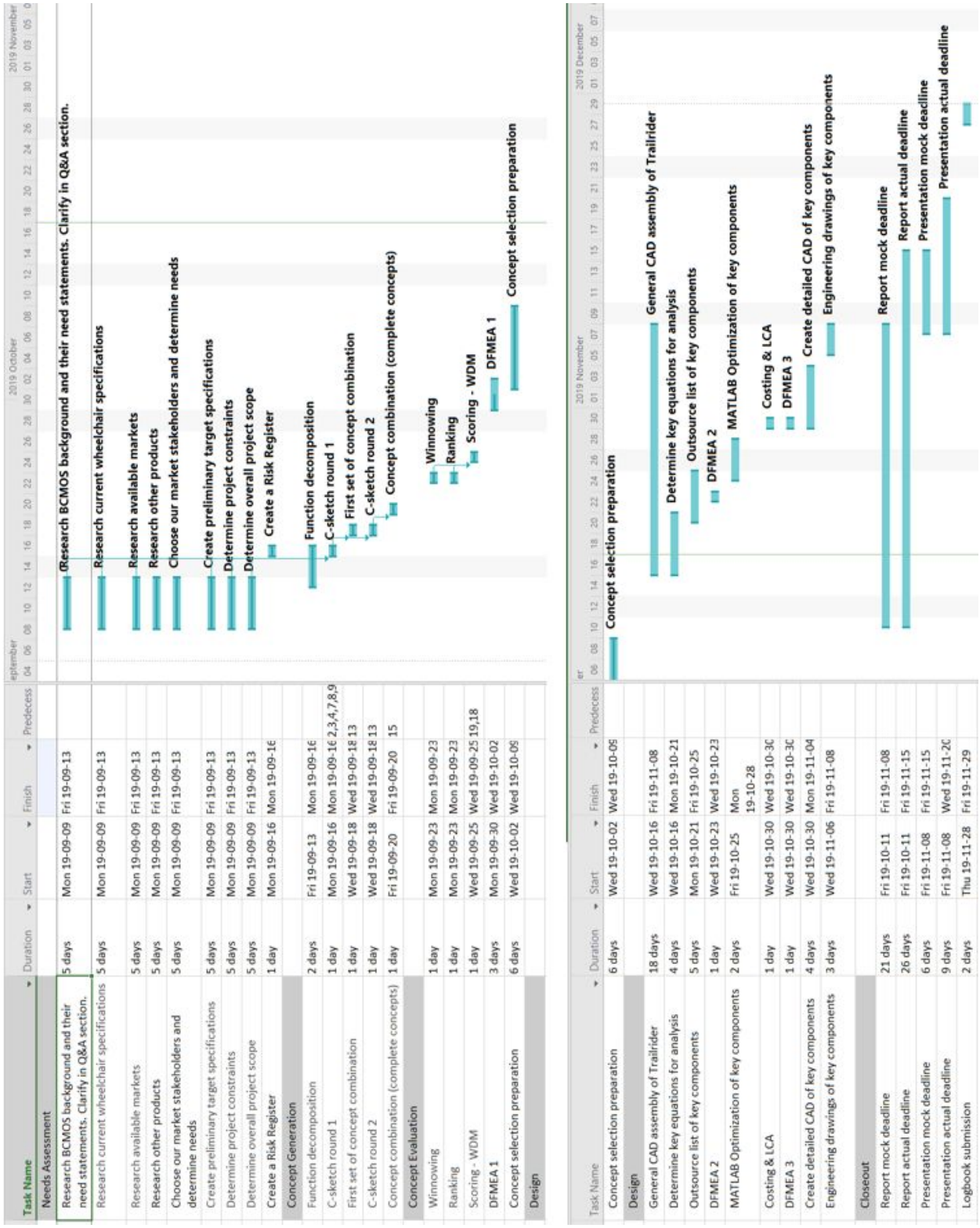

Figure 5: Revised Gantt chart from October 6 - 20

Task Name	Duration	Start	Finish	Predecess
Needs Assessment				
Research BCMOS background and their need statements. Clarify in Q&A section.	5 days	Mon 19-09-09	Fri 19-09-13	
Research current wheelchair specifications	5 days	Mon 19-09-09	Fri 19-09-13	
Research available markets	5 days	Mon 19-09-09	Fri 19-09-13	
Research other products	5 days	Mon 19-09-09	Fri 19-09-13	
Choose our market stakeholders and determine needs	5 days	Mon 19-09-09	Fri 19-09-13	
Create preliminary target specifications	5 days	Mon 19-09-09	Fri 19-09-13	
Determine project constraints	5 days	Mon 19-09-09	Fri 19-09-13	
Determine overall project scope	5 days	Mon 19-09-09	Fri 19-09-13	
Create a Risk Register	1 day	Mon 19-09-16	Mon 19-09-16	
Concept Generation				
Function decomposition	2 days	Fri 19-09-13	Mon 19-09-16	
C-sketch round 1	1 day	Mon 19-09-16	Mon 19-09-16	2,3,4,7,8,9
First set of concept combination	1 day	Wed 19-09-18	Wed 19-09-18	13
C-sketch round 2	1 day	Wed 19-09-18	Wed 19-09-18	13
Concept combination (complete concepts)	1 day	Fri 19-09-20	Fri 19-09-20	15
Concept Evaluation				
Winnowing	1 day	Mon 19-09-23	Mon 19-09-23	
Ranking	1 day	Mon 19-09-23	Mon 19-09-23	
Scoring - WDM	1 day	Wed 19-09-25	Wed 19-09-25	19,18
DFMEA 1	3 days	Mon 19-09-30	Wed 19-10-02	
Concept selection preparation	6 days	Wed 19-10-02	Wed 19-10-09	
Design				
Concept selection preparation	6 days	Wed 19-10-02	Wed 19-10-09	
Design				
General CAD assembly of Trailrider	18 days	Wed 19-10-16	Fri 19-11-08	
Determine key equations for analysis	4 days	Wed 19-10-16	Mon 19-10-21	
Outsource list of key components	5 days	Mon 19-10-21	Fri 19-10-25	
DfMEA 2	1 day	Wed 19-10-23	Wed 19-10-23	
Costing & LCA	1 day	Wed 19-10-30	Wed 19-10-30	
DfMEA 3	1 day	Wed 19-10-30	Wed 19-10-30	
Create detailed CAD of key components	4 days	Wed 19-10-30	Mon 19-11-04	
Engineering drawings of key components	3 days	Wed 19-11-06	Fri 19-11-08	
Closeout				
Report mock deadline	21 days	Fri 19-10-11	Fri 19-11-08	
Report actual deadline	26 days	Fri 19-10-11	Fri 19-11-15	
Presentation mock deadline	6 days	Fri 19-11-08	Fri 19-11-15	
Presentation actual deadline	9 days	Fri 19-11-08	Wed 19-11-20	
Logbook submission	2 days	Thu 19-11-28	Fri 19-11-29	

Figure 6: Revised Gantt chart from October 20 -27

Task Name	Duration	Start	Finish	Predecess
Needs Assessment				
Research BCMOS background and their need statements. Clarify in Q&A section.	5 days	Mon 19-09-09	Fri 19-09-13	
Research current wheelchair specifications	5 days	Mon 19-09-09	Fri 19-09-13	
Research available markets	5 days	Mon 19-09-09	Fri 19-09-13	
Research other products	5 days	Mon 19-09-09	Fri 19-09-13	
Choose our market stakeholders and determine needs	5 days	Mon 19-09-09	Fri 19-09-13	
Create preliminary target specifications	5 days	Mon 19-09-09	Fri 19-09-13	
Determine project constraints	5 days	Mon 19-09-09	Fri 19-09-13	
Determine overall project scope	5 days	Mon 19-09-09	Fri 19-09-13	
Create a Risk Register	1 day	Mon 19-09-16	Mon 19-09-16	
Concept Generation				
Function decomposition	2 days	Fri 19-09-13	Mon 19-09-16	
C-sketch round 1	1 day	Mon 19-09-16	Mon 19-09-16	2,3,4,7,8,9
First set of concept combination	1 day	Wed 19-09-18	Wed 19-09-18	13
C-sketch round 2	1 day	Wed 19-09-18	Wed 19-09-18	13
Concept combination (complete concepts)	1 day	Fri 19-09-20	Fri 19-09-20	15
Concept Evaluation				
Winnowing	1 day	Mon 19-09-23	Mon 19-09-23	
Ranking	1 day	Mon 19-09-23	Mon 19-09-23	
Scoring - WDM	1 day	Wed 19-09-25	Wed 19-09-25	19,18
DFMEA 1	3 days	Mon 19-09-30	Wed 19-10-02	
Concept selection preparation	6 days	Wed 19-10-02	Wed 19-10-09	
Design				
Task Name	Duration	Start	Finish	Predecess
Concept selection preparation	6 days	Wed 19-10-02	Wed 19-10-09	
Design				
General CAD assembly of Trailrider	18 days	Wed 19-10-16	Fri 19-11-08	
Determine key equations for analysis	4 days	Wed 19-10-16	Mon 19-10-21	
Outsource list of key components	5 days	Mon 19-10-21	Fri 19-10-25	
DFMEA 2	1 day	Wed 19-10-23	Wed 19-10-23	
Costing & LCA	1 day	Wed 19-10-30	Wed 19-10-30	
DFMEA 3	1 day	Wed 19-10-30	Wed 19-10-30	
Create detailed CAD of key components	4 days	Wed 19-10-30	Mon 19-11-04	
Engineering drawings of key components	3 days	Wed 19-11-06	Fri 19-11-08	
Closeout				
Report mock deadline	21 days	Fri 19-10-11	Fri 19-11-08	
Report actual deadline	26 days	Fri 19-10-11	Fri 19-11-15	
Presentation mock deadline	6 days	Fri 19-11-08	Fri 19-11-15	
Presentation actual deadline	9 days	Fri 19-11-08	Wed 19-11-20	
Logbook submission	2 days	Thu 19-11-28	Fri 19-11-29	

Figure 7: Revised Gantt chart from October 28 - November 3

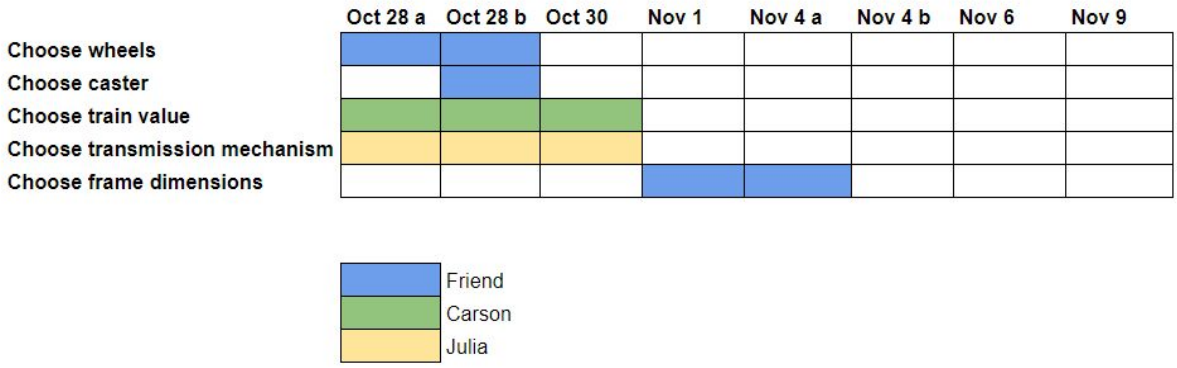

Figure 8: Supplementary improved Gantt chart for the week of October 28 - November 3

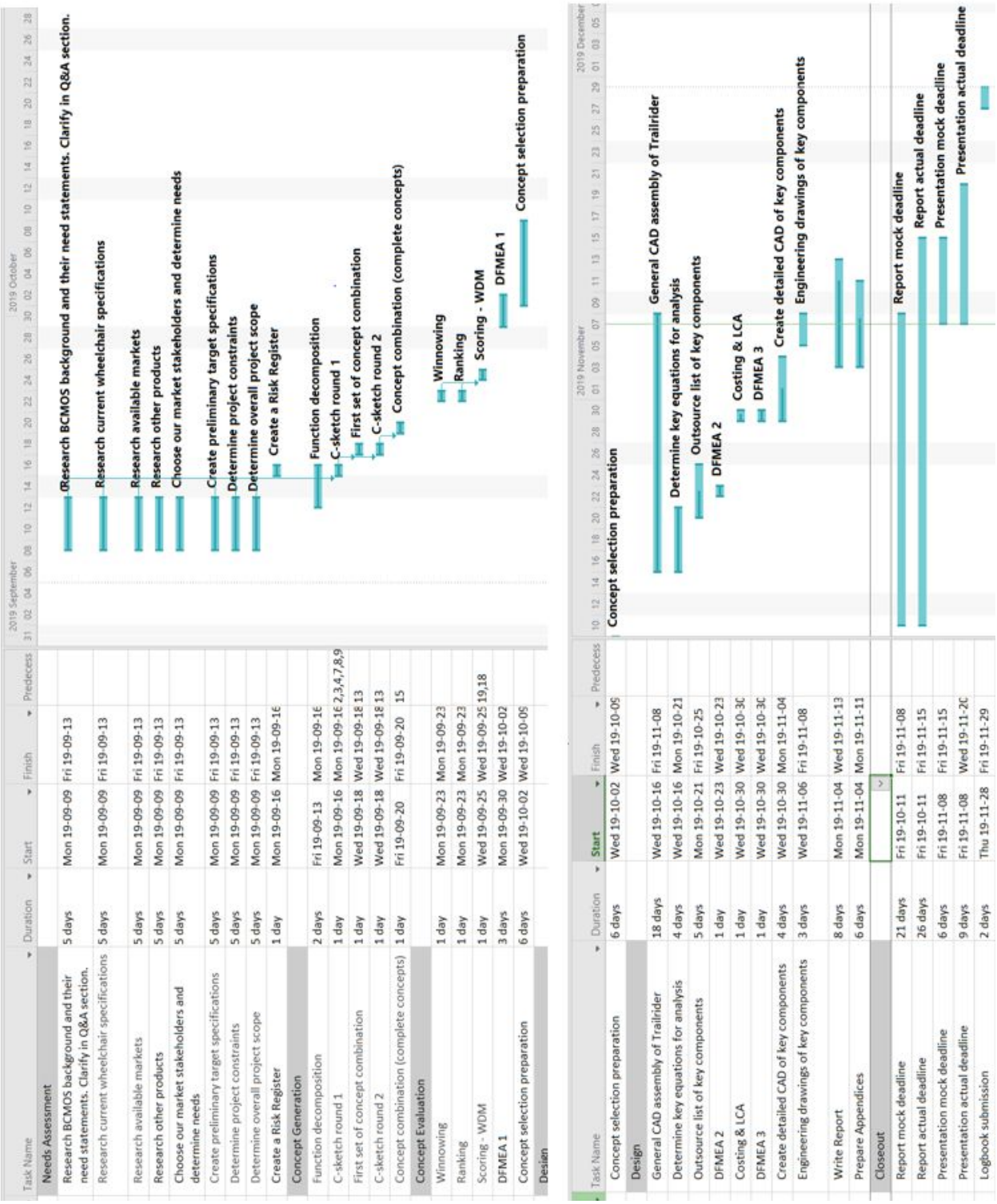

Figure 9: Revised Gantt chart from November 4 - 10

Ref:	Description of risk	Likelihood	Seriousness	Grade	Actions	Responsible officer
1	Not enough time to finish tasks / milestones listed in Gantt Chart	M	E	A	Work on weekends	Team
2	Documents get lost	L	E	A	Store all documents on Google Drive. If someone deletes a file, recover from bin.	Team
3	Team member(s) not sharing fair taskload	M	L	D	Mandatory team discussion and consequential iPeer evaluations.	Team
4	Absence of team member(s) from meetings	L	M	D	Mandatory team discussion and consequential iPeer evaluations.	Team
5	Realizing major section(s) are missing in report	M	E	A	Ensure there is a detailed checklist of report requirements. Have each team member initial items completed.	Team

Figure 10 : Risk Register

Appendix L: User/Operator Manual Draft

A-1 Assembly

A-1.1 Trailrider components

The Trailrider assembly consist of the following components:

- Front fork assembly with integrated castor wheel
- Main frame
- Two quick-release rear wheels
- Two propulsion levers
- Footplate
- Padded seat cushion

A-1.2 Attaching rear wheels

The wheels are designed to be quick-release, so this process should not take long in attaching the wheels to the frame. Due to the time constraints of this project, we were not able to design in detail the quick clip-on mechanism to attach the wheels to the frame.

A-1.3 Attaching front fork

To attach the front fork to the main frame, perform the following steps:

1) Loosen the screw with a 5mm allen key, provided in the assembly. Take off all components labelled in the figure below, except for the bottom bearing.
2) Slide the fork through the tube attached to the frame
3) Place back all components on top of the fork in the reverse order that they were taken off.
4) Tighten screw with the allen key until snug.

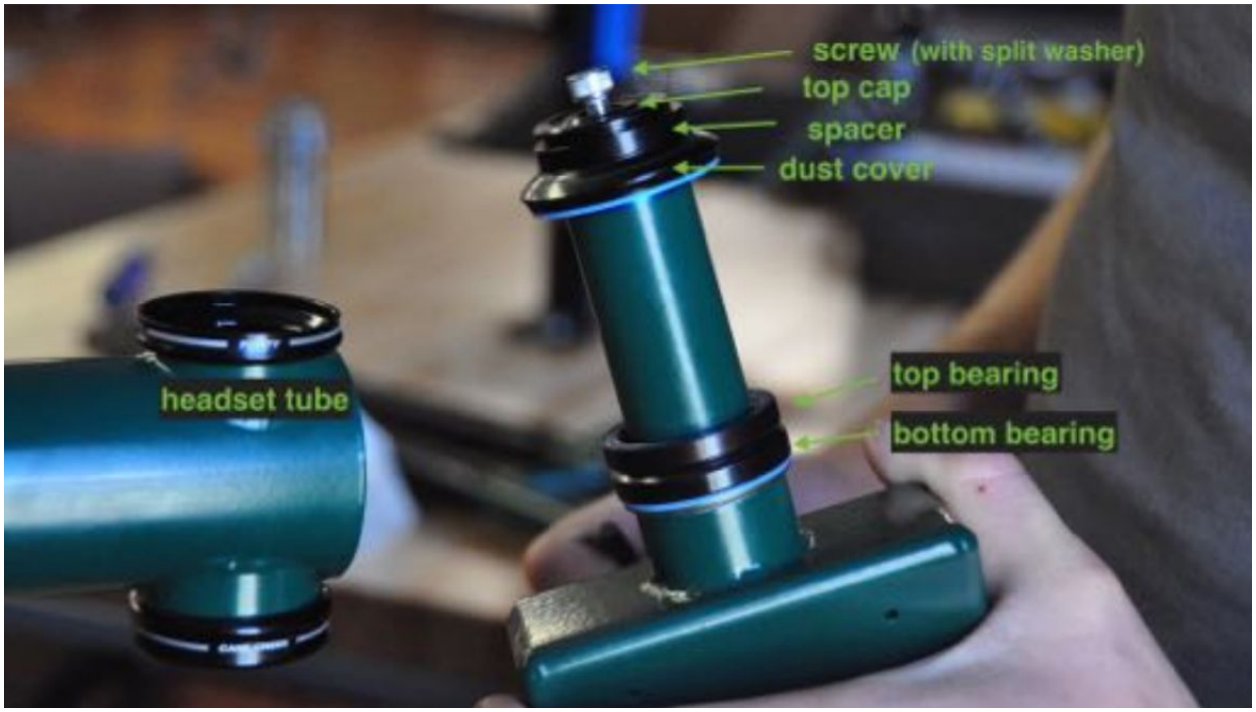

Figure 1: GRIT chair front fork-to-frame attachment parts

A-1.4 Attaching foot plate

To attach the foot rest to the frame, perform the following steps:

1) Loosen the clamp attached to the bottom vertical tube of the frame
2) Insert the footplate tube into the clamp
3) Tighten the fixture by pressing the clamp handle down so it is parallel with the tube.

A-1.5 Attaching seat cushion

To attach the seat cushion to the frame, simply attach the velcros from the cushion to the frame.

A-2 Riding

A-2.1 Safety

It is crucial that you practice safe maneuvers on the Trailrider in a safe, flat area until you get the hang of it. Do not attempt to maneuver through steep slopes and rough terrain until you are 100% confident in your handling abilities.

To ensure you safety at all times while riding, please make sure that you:

1) Wear a proper helmet
2) Maintain proper position at all times by using appropriate straps attached to the footplate and seat

A-2.2 Adjustability

Seat Angle
You can adjust your seat angle position by pressing on the buttons in the lever between the seat and handlebars. Slide the lever to the desired slot and allow the button to slide through the slot to ensure it is secure.

Footplate Height
You can adjust the height of the footplate by releasing the clamp and sliding the tube up or down to desired height. Ensure you secure the clamp after adjusting.

A-2.3 Using lever drivetrain

In order to use the levers, first you need to attach them to the drivetrain:

1) Ensure that they are rotated so that the braking lever is facing outwards.
2) Insert each lever into the coupling attached to the driving sprocket on either end of the seat. You should hear a click as the pins in the lever reach the end of the slots.

Propulsion
To propel yourself forward, push forward on the levers. Pull backwards to reset the lever position, and repeat this process again.

Braking
To brake, pull the levers all the way back so that the braking lever engages with the tire and stops rotation.

Turning
In order to turn left, push the right lever forward and keep the left lever stationary.
To turn right, push the left lever forward and keep the right lever stationary.

A-2.4 Climbing and descending slopes

Climbing and descending slopes is a tricky maneuver, but with the help of the long levers, you are able to adjust the “gear ratio” of the Trailrider by adjusting where you grip on the levers. In short, gear ratios determine how easy or hard it is for you to propel forwards.

Climbing

1) Adjust your grip to hold closer to the top of the levers, and propel forwards as usual.
2) Bend you torso forwards to transfer more weight to the front of the Trailrider, in order to keep it balanced.

Descending

1) Lean your torso back into the seat to keep the Trailrider balanced.
2) Ensure you make proper use of the brakes by pulling all the way back on the levers.

3) Try to descend in shorter interval so that the Sherpa doesn't overheat the disc brakes. Travelling in zig zags is also better than going straight down.

Flat ground
If you are strong, adjust your grip lower on the levers to go faster but with extra effort. Otherwise, keep your grip in the middle/top of the levers.

A-2.5 Transfers

1) Before transferring, ensure that the parking brake is engaged and theTrailrider is completely stationary.
2) To enter in or out of the Trailrider, prop your torso up by holding onto the frame beside the seat.
3) Swing one leg over the fork and step onto the ground with both legs. If this is not possible, have someone assist in doing so. Please note that it is also possible to use the traditional BCMOS method of transferring riders through the use of a crane.

A-3 Disassembly

A-3.1 Removing seat cushion

To remove the seat cushion, simply pull it off from the velcros on the frame.

A-3.2 Removing foot plate

1) Release the clamp attaching the foot plate to the frame.
2) Pull out the foot plate bar from the clamp.

A-3.3 Removing front fork

Please see section 1.3 of this user manual. Perform the same steps, with the only difference being that you are removing the fork from the frame instead of attaching it. Ensure you put all components (screw, bushings, spacer, etc) back onto the frame and tighten the screw to prevent your from losing them.

A-3.4 Removing rear wheels

The wheels are designed to be quick-release, so this process should not take long in de-attaching the wheels from the frame. Due to the time constraints of this project, we were not able to design in detail the quick clip-on mechanism to de-attach the wheels from the frame.

A-4 Maintenance

A-4.1 Inflating wheels

The tire pressure should be checked regularly to reduce the risk of damage and reduce the rolling resistance of the tires. The tires should be inflated to **35 psi.**

A-4.2 Chain lubrication and cleaning

You should lubricate both chains once a month with synthetic oil or similar (can be found at a bike shop). This is easily done by simultaneously driving the chain by spinning the wheel, and dropping oil onto the chain links. To avoid a big mess, place a rag under the drivetrain.

A-4.3 Chain inspection and replacement

During the lifetime of this product, the chain will require replacement once it becomes too worn out after excessive use. You should check for chain wear every three months using a chain gauge. You should also check once a month that the tension in the chain is sufficient. To learn more about chain wear, tension and when to seek a chain replacement, please visit the following website: http://www.bike-manual.com/brands/trek/om/trailerbike/chain.htm

If you find that you require a chain replacement, please visit a bike shop as this process requires special tools.

A-4.4 Changing gear ratio

If you would like to mechanically change your drivetrain gear ratio (say if you want to make it easier or harder overall to propel), it is possible to do so by selecting a different cog on the rear cassette to have the chain run on. This will require taking off the chain and putting it back on the selected cog of choice, which means you will need to visit a bike shop.

A-5 Warnings

Please be advised of the following warnings in order to ensure your safety:

1) Ensure that all pin connections are secured properly (i.e. the pin ‘clicks’ when it is secure).
2) Ensure all clamps and screws are tightened properly.
3) Practice riding the TrialRider in a safe, flat area until you are proficient at propulsion, turning and braking. You do not want to end up in a situation where you can injure yourself by not knowing how to maneuver on a hill!
4) Ensure that you are properly secured into the wheelchair. Failure to do so could cause you to fall out of the chair.

The following warnings address some of the highest RPN issues determined in DFMEA:

1) To reduce risk of tires popping, ensure that your tires are always inflated to the correct pressure. Ensure that your inner tubes are in good condition too.
2) To reduce risk of chain breaking, ensure you follow the chain maintenance procedures outlined in section 4.0.

Reference for Figure 1:
https://static1.squarespace.com/static/54a1bb27e4b07419f3973e5e/t/5894e2df17bffc8959c58dde/1486152422134/FC+user+manual+2.5.pdf

Appendix M: Engineering Drawings

Refer to the 6 page document included at the end of Appendix P.

Appendix N: Technical Data

Refer to Appendix G for technical data including part numbers tabled with cost of goods.

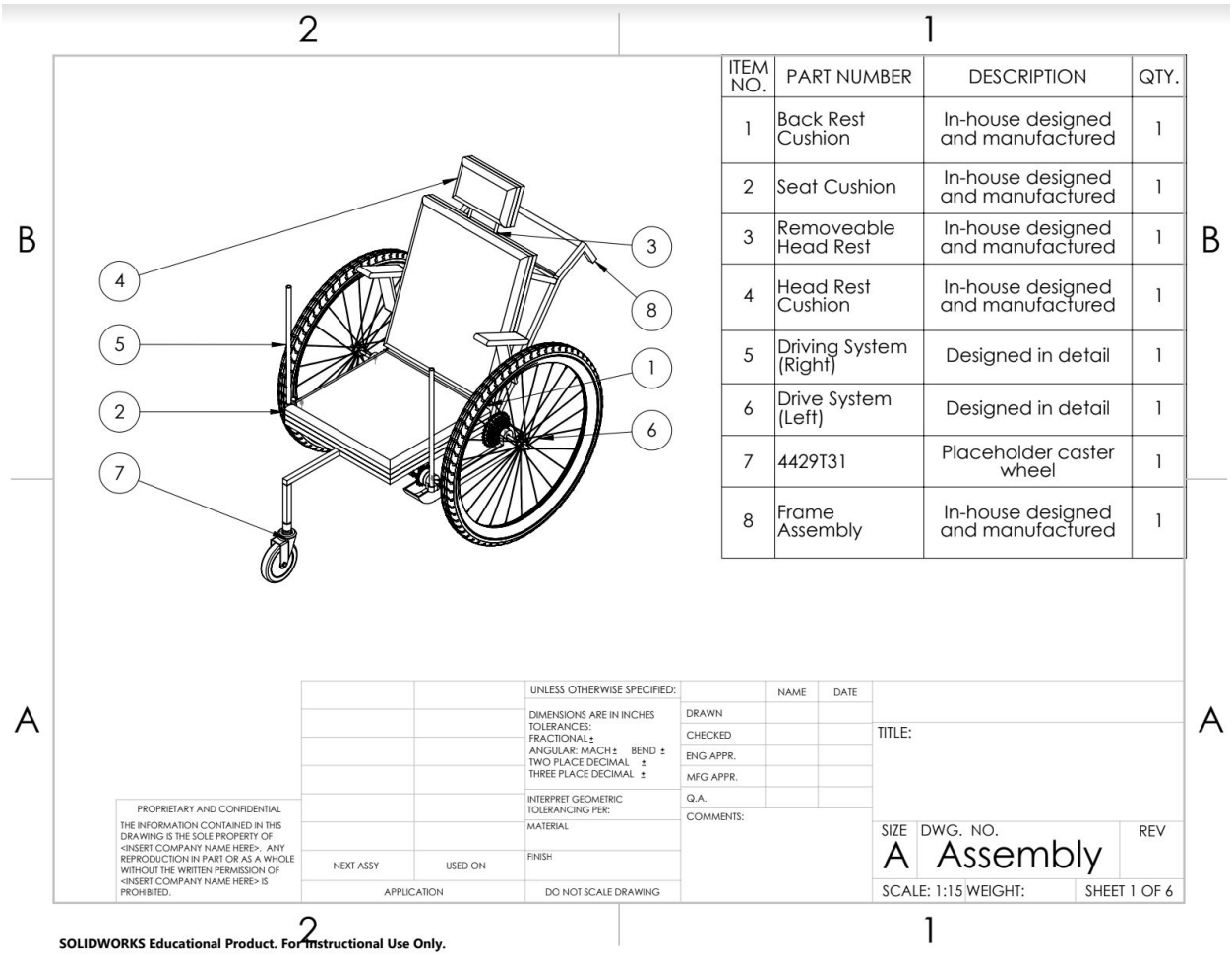

Figure 1: Labelled Assembly Guide

Appendix O: Weekly Reports

The following eight reports in this appendix are dated for the entire duration of the project, excluding Thanksgiving week. These reports outline completed tasks, upcoming goals and individual responsibilities for each week.

MECH 328 Weekly Progress Report *Dates: September 4 - 7*

Group: 10 Project Title: TrailRider 5.0

Last Week's Goals:

1. To familiarize ourselves with the project documents and create target specifications
2. To begin initial research
3. Set-up online google drive for document storage
4. Create a preliminary Gantt chart to manage upcoming week's timeline

Last Week's Activities:

Name	Activities	Hours Worked	
		Last Week	Total
Andrea	● Found an article related to the project ● Read the project and course guide document	1	1
Carson	● Found an article related to the project ● Read the project and course guide document ● Created weekly report	2	2
Julia	● Found an article related to the project ● Read the project and course guide document ● Created target specifications and preliminary Gantt chart for weekly report	2	2
Lukas	● Found an article related to the project ● Read the project and course guide document	1	1
Ratthamnoon	● Found an article related to the project ● Read the project and course guide document	1	1
Stephen	● Found an article related to the project ● Read the project and course guide document	1	1
Total		8	8

Summary of progress:

- Many resources have been compiled during class and the team is familiar with the project.
- A google drive has been created and organized into appropriate folders.
- A preliminary Gantt Chart and Target Specifications have been created.

Assessment of Overall Progress:

- The team has not yet met outside of class time. Meetings this week will facilitate productivity and allow the design process to begin.
- Modifications to the target specifications and Gantt Chart may occur in the next week.

Goals for Next Week:

1. To discuss team goals, expectations, strengths and weaknesses. Also to distribute tasks accordingly.
2. To work through an iteration of the design process from finalizing need statements to function generation.

Action Items for Next Week:

Name	Action(s)	Due Date(s)
Everyone	Buy a logbook	Sept. 9
Everyone	Discuss team expectations, goals and strengths	Sept. 9
Everyone	Determine who will be responsible for each action	Sept. 9
TBD	Brainstorm needs for the rider, the sherpas, BCMOS, the public and search and rescue	Sep. 9
TBD	Determine the current specifications for the Trailrider (cost, weight, length, width etc.)	Sept. 9
TBD	Estimate the worst-case acceptable value for these specifications with justification	Sept. 11
TBD	Create a high-level Gantt chart with important deadlines to work from	Sept. 9
TBD	Compile interesting/useful resources from class list	Sept. 11
TBD	Perform function decomposition on the Railrider based on needs	Sept. 11
TBD	Begin brainstorming solutions to each function	Sept. 11

MECH 328 Weekly Progress Report *Dates: September 8 - 15*

Group: 10 Project Title: TrailRider 5.0

Last Week's Goals:

1. To discuss team goals, expectations, strengths and weakness and to distribute tasks accordingly.
2. To work through an iteration of the design process from developing needs statements to function decomposition.
3. To identify our target market with justification.

Last Week's Activities:

Name	Activities	Hours Worked	
		Last Week	Total
Andrea	● Researched search and rescue regulations and compatibility ● Researched potential target markets, client needs ● Report template	8	9
Carson	● Researched alternative products to the TrailRider, including the Joelette. ● Collaborated on target specifications with the team ● Started this weekly report	8	10
Julia	● Updated Gantt Chart progress each meeting ● Researched biomechanics and wheelchair properties ● Determined constraints and needs sacrifices	8	10
Lukas	● Researched comparable products and solutions ● Generated a summary of the target market	8	9
Ratthamnoon	● Researched Canadian disability statistics ● Worked on target specifications, target market, and needs & stakeholder, and project scope ● Finished this weekly report	8	9
Stephen	● Gantt chart ● Function decomposition ● Researched needs and stakeholders	8	9

Summary of progress:

- Preliminary research has been conducted on several alternatives to the TrailRider such as the Joelette, the GRIT and the Freewheel
- A preliminary set of target specifications has been developed
- A preliminary target market has been established as paraplegics who would like more independence than offered by the TrailRider when exploring urban, class one terrain

Assessment of Overall Progress:

- Most of the tasks that needs to be finished this week is finished, and the rest need minor revisions to finish and not critical for starting next week's tasks.
- Some team members may do more task wrap up than others, but the team as a whole is on track to complete the project on time.

Goals for Next Week:

1. Conclude and document research on the current TrailRider design (complete 'Investigation' appendix)
2. Conclude and document research on other products on the market (complete 'Literature Research' appendix)
3. Begin generating concepts for each function that has been identified

Action Items for Next Week:

Name	Action(s)	Due Date(s)
Andrea	Revise needs assessment	9/16
Carson	Summarize current wheelchair specifications	9/16
Julia	Summarize BCMOS (Investigation Appendix)	9/16
Lukas	Summarize existing designs (Literature Appendix)	9/16
Ratthamnoon	Determine overall project scope	9/16
Stephen	Revise needs assessment	9/16
All	Function Decomposition	9/16
All	Concept generation process (C-sketch rounds, concept combination)	9/20
All	DFMEA 1	9/20

MECH 328 Weekly Progress Report *Dates: September 16 - 22*

Group: 10 Project Title: TrailRider 5.0

Last Week's Goals:

1. To complete research on the current Trail Rider for the 'Investigation' appendix.
2. To complete research on other market comparables for the 'Literature Research' appendix.
3. To begin concept generation for the key functions.

Last Week's Activities:

Name	Activities	Hours Worked	
		Last Week	Total
Andrea	● Generated concept fragments and full concepts ● Analyzed the current design hands-on with team ● Resumed Investigation Appendix & Final Report format	8	17
Carson	● Generated concept fragments and full concepts ● Analyzed the current design hands-on with team ● Organized generated concepts ● Worked on the 'Investigation' Appendix	8	18
Julia	● Generated concept fragments and full concepts ● Analyzed the current design hands-on with team ● Updated Gantt Chart, created Risk Register, began Failure Appendix.	8	10
Lukas	● Generated concept fragments and full concepts ● Analyzed the current design hands-on with team ● Completed the weekly report ● Completed the 'Literature Research' appendix	8	17
Ratthamnoon	● Generated concept fragments and full concepts ● Analyzed the current design hands-on with team ● Led weekly TA meeting ● Updated target specifications for this week ● Winnowing	8	17
Stephen	● Generated concept fragments and full concepts ● Analyzed the current design hands-on with team	8	17

	• Worked on the value proposition • Winnowing		

Summary of progress:

- Market comparable research has been completed, and a more in-depth understanding of the current Trail Rider has been developed.
- Target specifications have been updated to more accurately represent the current stage.
- Concept fragments were generated for each of the prime functions, and full concepts were generated based on these fragments.
- Investigation appendix is partially complete.
- The project scope was determined and detailed along with an updated target market.
- Winnowing was completed.

Assessment of Overall Progress:

- Progress is in line with our Gantt chart projection and progress is sufficient to reach upcoming deadlines.

Goals for Next Week:

1. Score full concepts and complete DFMEA
2. Complete the 'Investigation' appendix

Action Items for Next Week:

Name	Action(s)	Due Date(s)
All	Score concepts that passed winnowing	9/22
All	Complete DFMEA 1	9/22

MECH 328 Weekly Progress Report *Dates: September 23 - 29*

Group: 10 Project Title: TrailRider 5.0

Last Week's Goals:

1. Score full concepts and complete DFMEA
2. Complete the 'Investigation' appendix

Last Week's Activities:

Name	Activities	Hours Worked	
		Last Week	Total
Andrea	● Generated and discussed full concepts with team ● Complete Investigation Appendix ● Completed weekly report	8	25
Carson	● Discussed full concepts with the team ● Researched existing patents related to lever-drive wheelchairs ● Created a new requirements document ● Developed evaluation criteria for WDM	8	25
Julia	● Discussed full concepts with team ● Researched existing patents for lever propulsion ● Re-drew and solidified full concepts in greater detail to prepare for WDM next week	8	25
Lukas	● Discussed full concepts with team ● Re-drew and solidified full concepts in greater detail to prepare for WDM next week ● Developed evaluation criteria for WDM	8	25
Ratthamnoon	● Discussed full concepts with team ● Worked on and finished evaluation criteria	8	25
Stephen	● Researched rider guild to prove there is a market for a version of the TrailRider with more rider independence. ● Discussed full concepts with team.	8	25

Summary of progress:

- A new round of full concept generation was done, as per Professor Hodgson's recommendation
- Four full concepts, of broad variety, were completed and are to be evaluated in the WDM
- Further research and decisions were made for setting up the ranking system of our WDM
- Further research was done to support our scope and the ranking of our needs
- Investigation Appendix was completed
- An updated requirements document was made in accordance to Professor Mckesson's lecture

Assessment of Overall Progress:

- Progress is about a week behind Gantt chart schedule due to problems that arose in full concept generation and in developing a rating system for the WDM
- Optimization and DFMEA were also unable to be completed
- Scoring WDM has been pushed for next week, which is expected to take one day
- Optimization will commence after the WDM, which is expected to take the rest of the week
- DFMEA can take one day, as opposed to three days stated in the Gantt chart for lag time
- If the above assessment is correct, the team can be back on track and be ready for the Concept Selection Review

Goals for Next Week:

1. Complete scoring of our four full concepts in the WDM
2. Optimization and DFMEA
3. Be ready for CSR

Action Items for Next Week:

Name	Action(s)	Due Date(s)
All	Score full concepts in WDM	10/06

All	Optimize selected concept	10/06
All	Organize documents for CSR	10/06

MECH 328 Weekly Progress Report *Dates: Sept 29 - Oct 6*

Group: 10 Project Title: TrailRider 5.0

Last Week's Goals:

1. Complete scoring of our four full concepts in the WDM
2. Optimization and DFMEA
3. Be ready for CSR

Last Week's Activities:

Name	Activities	Hours Worked	
		Last Week	Total
Andrea	● Updated and organized concept drawings ● Updated needs & stakeholders ● Research on hand pedals, lever, manual wheelchairs for WDM	8	33
Carson	● Developed evaluation criteria for the WDM ● Summarized work in a word document to justify criteria and weight choices	8	33
Julia	● Researched patents and efficiencies on the different propulsion types ● Drew up the full concepts ● Typed up full descriptions of concepts	8	33
Lukas	● Updated the target market and project scope document ● Updated the target specifications, ranking, and WDM documents to be consistent and compatible for concept selection review	8	33
Ratthamnoon	● Researched patents for different types of wheelchair propulsion, and wrote documentation of relevant patents ● Typed up full descriptions of concepts	8	33
Stephen	● Researched patents for lever driven wheelchairs ● Made flowchart for concept selection review	8	33

	● Completed weekly report		

Summary of progress:

- Evaluation criteria for the WDM are updated and completed with justifications for criteria and weighting
- Found several patents for lever driven wheelchairs
- Concept drawings are updated and organized
- Efficiencies of different propulsion types researched
- Made a flowchart for concept selection review

Assessment of Overall Progress:

- Optimization and DFMEA were also unable to be completed
- Scoring WDM has been pushed for next week, which is expected to take one day
- Optimization will commence after the WDM, which is expected to take the rest of the week
- DFMEA can take one day once we have a full concept
- If the above assessment is correct, the team can be back on track and ready for the Concept Selection Review
- Last week's goals have been bumped to next week

Goals for Next Week:

1. Complete scoring of our four full concepts in the WDM
2. Optimization and DFMEA
3. Be ready for CSR

Action Items for Next Week:

Name	Action(s)	Due Date(s)
All	Score full concepts in WDM	10/06
All	Optimize selected concept	10/06
All	Prepare for concept selection review	10/06

MECH 328 Weekly Progress Report *Dates: October 6 - 20*

Group: 10 Project Title: TrailRider 5.0

Last Week's Goals:

1. Complete scoring of our four full concepts in the WDM
2. CSR Presentation
3. Begin Optimization and DFMEA 1

Last Week's Activities:

Name	Activities	Hours Worked	
		Last Week	Total
Andrea	● Presented 'Project Management' during CSR ● Organized/labelled concepts for presenting ● Started DFMEA	8	41
Carson	● Completed WDM evaluation ● Presented 'Concept Evaluation' during CSR ● Began detailed design by laying out important trade-offs	8	41
Julia	● Drew concept B.2 in full detail for CSR ● Presented 'Concept Generation' during CSR ● Began sourcing major components for device	8	41
Lukas	● Completed WDM evaluation ● Presented 'Project Scope and Target Specs' during CSR	8	41
Ratthamnoon	● Wrote full concept descriptions for CSR ● Presented 'Project Needs' during CSR ● Began detail design and optimization by researching appropriate methods	8	41
Stephen	● Presented 'Function Decomposition' during CSR ● Started on DFMEA	8	41

Summary of progress:

- WDM evaluations are complete and concept B.1 was selected to proceed
- All CSR material prepared and team presented successfully at CSR
- Began DFMEA 1
- Began researching design considerations for upcoming analysis and calculations
- Began general SOLIDWORKS model of general components (i.e frame)

Assessment of Overall Progress:

- Meetings have been cut by 2 hours this week, since we worked overtime up until now.
- DFMEA 1 will be finished next week
- Calculations and stress analysis will occur simultaneously while outsourcing components
- We are slightly behind schedule if we want to meet our "mock report" deadline. We are considering meeting up next Friday to make up for necessary work. However, we are on track for the actual report deadline.
- General CAD of Trailrider will be an ongoing project until 08/11/19

Goals for Next Week:

1. Determine governing equations for analysis of components to be input to MATLAB
2. Create excel sheet with a range of outsourced components including costs
3. Begin MATLAB optimization of the selected range of key components
4. Finish DFMEA 1 and begin DFMEA 2

Action Items for Next Week:

Name	Action(s)	Due Date(s)
Carson, Julia	Determine key equations for analysis of key component candidates	10/21
All	Outsource list of key components from McMaster (or similar) for further evaluation/selection	10/25
Friend	Perform optimization on MATLAB to determine final outsourced components	10/28

Stephen, Andrea	Complete DFMEA 1 and begin DFMEA 2	10/23

MECH 328 Weekly Progress Report *Dates: October 20 - 27*

Group: 10 Project Title: TrailRider 5.0

Last Week's Goals:

1. Determine governing equations for analysis of components to be input to MATLAB
2. Create an excel sheet with a range of outsourced components including costs
3. Begin MATLAB optimization of the selected range of key components
4. Finish DFMEA 1 and begin DFMEA 2

Last Week's Activities:

Name	Activities	Hours Worked	
		Last Week	Total
Andrea	● Started DFMEA 2 ● Started template for prototype appendix	8	49
Carson	● Developed Gantt chart for detailed design ● Wrote weekly report	8	49
Julia	● Justified choice of chain drive over other drives ● Refined Gantt Chart tasks for design stage	8	49
Lukas	● Started the needs and target specifications section of the final report.	8	49
Ratthamnoon	● Started general CAD assembly of the wheelchair ● Started engineering calculations	8	49
Stephen	● Completed DFMEA 1 ● Started on DFMEA 2	8	49

Summary of progress:

- A MATLAB simulation to choose a drive-system may be outside our scope given the remaining project time, so this task was removed from our plan
- The required appendices from the report rubric have been divided among team members
- DMFEA 1 was completed and DMFEA 2 has begun
- Chose the important design decisions that will be made in the detailed design phase

- Preliminary SolidWorks model has been completed, it will be updated as detailed design is continued

Assessment of Overall Progress:

- Our team has approximately 10 meetings before the report is due. Our design decisions moving forward will be greatly constrained by time. The majority of our efforts will be put into designing a drive-system, while other components such as frame material, fasteners and seat cushion will be chosen such that they are 'good enough for a prototype'.
- Three appendices of the report have been written, and the largest remaining appendices have been assigned 'leaders' who will ensure that all rubric items are met.
- All decisions leading up to the CSR are considered finalized, which means that Appendix D and Appendix E can be written.

Goals for Next Week:

1. Choose a train value with justification and calculations
2. Choose all components for the drive system
3. Choose wheels and a caster
4. Complete Appendix D
5. Make substantial progress on Appendix E
6. Complete the second DFMEA

Action Items for Next Week:

Name	Action(s)	Due Date(s)
Carson	Choose a train value with justification	10/30
Julia	Choose the type of power transmission with justification	10/30
Friend	Choose wheels and a caster with justification	10/28
Stephen	Complete DFMEA 2	10/28
Stephen	Lay out the foundation for Appendix H: Failure and Safety	11/01
Lukas	Complete Appendix D: Needs, Requirements and Evaluation Criteria	11/01

Lukas	Lay out the foundation for Appendix E: Concept Development and Selection	11/04
Andrea	Lay out the foundation for Appendix J: Prototype Testing	11/01

MECH 328 Weekly Progress Report *Dates: Oct 28 - Nov 3*

Group: 10 Project Title: TrailRider 5.0

Last Week's Goals:

1. Choose a gear train value with justification and calculations
2. Choose all components for the drive system
3. Choose wheels and a caster
4. Complete Appendix D
5. Make substantial progress on Appendix E
6. Complete the second DFMEA

Last Week's Activities:

Name	Activities	Hours Worked	
		Last Week	Total
Andrea	● Worked on the life cycle analysis appendix	8	57
Carson	● Determined preliminary train value range ● Specified chair width per engineering calculations	8	57
Julia	● Researched various bike components to explore synergies and compatibility issues.	8	57
Lukas	● Completed a draft of 50% of the report body. ● Wrote this weekly report.	8	57
Ratthamnoon	● Completed preliminary engineering design calculations to address prime areas of concern	8	57
Stephen	● Finished DFMEA 2 ● Made significant progress towards DFMEA 3	8	57

Summary of progress:

- A preliminary gear ratio range has been determined to provide a general value such as to enable the specification of other drivetrain components.

- The second DFMEA is complete, and the third is nearing completion with only minor further revisions required per final design information.
- Life cycle analysis is 50% complete.
- Significant progress was made on the report in lieu of Appendices D and E.

Assessment of Overall Progress:

- Our team has approximately 7 meetings before the report is due. Our design decisions moving forward will be greatly constrained by time. The majority of our efforts will be put into designing a drive-system, while other components such as frame material, fasteners and seat cushion will be chosen as prototype quality.
- Appendices of the report are in various stages of completion and have been assigned 'leaders' who have begun their respective sections to ensure rubric deliverables are met.
- Drivetrain component selection is proving to be more time consuming than we initially anticipated. As such, we plan to focus on aspects relevant to propulsion and potentially abandon the specification of parts that at not unique to our design such as disc brakes.
- A MATLAB optimization has been removed from our plan based on time constraints as our time is better spent on ensuring we have a working set of components. Detailed optimization can be completed at later stages that are out of the scope of this project.

Goals for Next Week:

1. Finalize the specification of all drivetrain components.
2. Develop a working draft for all appendices to better evaluate progress.
3. Complete the third DFMEA
4. Complete all minor appendices

Action Items for Next Week:

Name	Action(s)	Due Date(s)
Carson	Finalize part specifications; intent towards producing a detailed list of components and associated costs.	11/06
Julia	Complete assigned minor appendices.	11/01
Friend	Refine calculations per final part specifications. Assemble the CAD model of the drivetrain system; intent to deliver engineering drawings and report images.	11/06
Stephen	Complete the failure modes appendix and assists with finalizing part specifications.	11/06

Lukas	Continue assigned in progress sections of the report body.	11/01
Lukas	Complete Appendices D and E	11/04
Andrea	Complete the life cycle analysis appendix and other minor appendices as per Goal item 4 for next week.	11/06

MECH 328 Weekly Progress Report *Dates: November 3 - 10*

Group:10 Project Title: TrailRider 5.0

Last Week's Goals:

1. Finalize the specification of all drivetrain components.
2. Develop a working draft for all appendices to better evaluate progress.
3. Complete the third DFMEA
4. Complete all minor appendices

Last Week's Activities:

Name	Activities	Hours Worked	
		Last Week	Total
Andrea	● Specified parts for drive train ● LCA and Prototype testing continued	8	65
Carson	● Completed draft of Appendix F	8	65
Julia	● Completed project management and weekly report appendices ● Searched for drive train parts and compatibilities	8	65
Lukas	● Completed draft of report summary	8	65
Ratthamnoon	● Simplified drive system design to speed up parts specification process ● Finished chain failure calculations from DFMEA, and assist with other calculations ● Specify overall dimensions, and start assembling drive train in SolidWorks	8	65
Stephen	● Completed DFMEA 3 ● Specified parts for drive train	8	65

Summary of progress:

- Specification of drive system parts is done with the help of design simplification, and blackboxing parts that are time-consuming but not as critical to the drive system as a whole.
- Most of written appendices are split up between members and expected to be done before the meeting next week. However, there are some appendices that are contingent on other appendices that were just finished (ex: engineering drawing appendices needs parts specification, which was just done because calculations were just done), so those will be written next week.

Assessment of Overall Progress:

- Some parts of the report may be more polished than others due to more time available, but all appendices will be written.
- Group is on track to finish the report without overtime.

Goals for Next Week:

1. Finish any appendices that leftover.
2. Assemble all of the appendices into a coherent report, and proofreading.

Action Items for Next Week:

Name	Action(s)	Due Date(s)
Carson	Finalize Appendix F; edit other sections of the report	11/13
Julia	Complete cost of goods and user manual appendices	11/13
Friend	Assemble the CAD model of the drivetrain system; deliver engineering drawings and report images.	11/13
Stephen	Complete appendices H and E	11/13
Lukas	Refine and edit report content	11/13

Andrea	Complete appendices I and J	11/13
All	Compile appendices into report	11/15

Appendix P - Design Considerations

This appendix is intended to organize the overall design thought process, including what level of design should be included in this project for each component.

P-1 Sub-Assemblies

The following list includes the major sub-assemblies of the TrailRider. The bolded list is what our group chose to focus on given the time constraints of the project.

- Frame
    - Overall dimensions
    - Material
    - Cross sectional area
    - Footplate
- Seat
    - Seatbelt
    - Cushion
    - Seat angle positioning
- **Drive system**
    - **Chain drive vs. Gearbox**
    - **Chain (if used)**
    - **Levers**
    - **Gears / sprockets**
    - **Axle**
- Sherpa handlebars
    - Hand grip
    - Overall shape and ergonomics
- Braking System
    - Disc rotors
    - Pads
    - Cables and housing
    - Lever braking pins
- Wheels
    - Castor wheel
    - Two main wheels
    - Diameter/Width
    - Pressure
    - Tread type

P-1.1 Frame

Design Decision: Frame material
Use whatever the trailrider or other wheelchairs use

P-1.2 Seat

Design Decision: Seat width
Decision - 17”
Calculated based on average width from GRIT chair seat width options
https://www.gogrit.us/grit-freedom-chair-3-model

P-1.3 Drive System

Design Decision: Train value
Decision - e = 0.71

Table 1: Pros and cons of using a higher train value (decreased torque increased speed)

Pros	Cons
Easier to start from rest	Lower maximum speed

Design Trailrider average speed: **4.4 km/hr**

Calculations are shown below:
From "How long is a hike" from "BCMOS Background" for Garibaldi: 12 hours, presumably an acceptable speed.
From https://www.vancouvertrails.com/trails/garibaldi-lake/: 5 hours
We can say that ratio of BCMOS hike time per regular hike time: 12/5
Speed ratio would be the inverse: 5/12
Regular trail speed around Stanley Park speed from
https://www.vancouvertrails.com/trails/stanley-park/: 6.5km/2hr
Acceptable BCMOS trail speed: (6500m/7200s)(5/12) = 1.354 km/hr

However, since we aim for higher speeds, a reasonable speed to choose is 4.4 km/r based on our train value of 0.71.

Design Decision: Power transmission method
Decision - Chain Drive

In table 2, the most important advantages and disadvantages are highlighted in bold.

Table 2: Gears vs chain vs belt pros and cons

System	Pros	Cons
Gear	High efficiency	**Opposite rotation - requires idler gear to make it work (too many parts)**
	Velocity ratio remains constant (not important here as speeds are low)	Rigid parts requires precise alignment
	Good for small to high speed reduction	Requires full lubrication to prolong life
		Short center distance
Chain	**Easy maintenance with local bike shops**	Cannot be used for non-parallel shafts
	Chain introduces flexibility into system	Chordial speed variation (not very important here as speeds are low)
	Allows for medium center distances	
Belt	Flexibility in the system	Belt slip occurs
	Quiet operation	Requires pre-tension
	High efficiency (up to 98%)	Relatively low life
	No lubrication required	**Easily damaged by heat and abrasives**

** Incorporate value equation into a design decision

Design Decision - Rear wheel hub and driving/driven sprocket types

Decision - 14-28T rear cassette and free hub mechanism

Decision - Front sprocket with 17 teeth

From our calculations in Appendix F, we determined that we need a driven sprocket with 24 teeth. Since our design requires a free-hub mechanism to use the lever drive, we chose a cassette with multiple cogs because it is an easy part to obtain off the shelf. We will simply use

one of the cogs (the 24T one). Combined with a 17 tooth front sprocket, this creates a train value 0.71.

P-1.4 Sherpa Handlebars

Due to the time constraints of the project we did not have time to specify sherpa handlebars.

P-1.5 Braking System

Due to the time constraints of the project we did not have time to specify the braking system.

P-1.6 Wheels

Design decision: Main wheel diameter

Decision - 26”

Table 3: Pros and cons of using a bigger wheel diameter

Pros	Cons
More contact with the ground, so more traction	Harder to accelerate
Smoother ride	More expensive
	Heavier
	Raises the COG

GRIT Freedom chair uses 26” all terrain mountain bike wheels

Design decision: Main wheel width

Decision- 2.3”

Table 4: Pros and cons of using a wider wheel

Pros	Cons
More traction	More rolling resistance

Sand + snow wheels are 2.3” wide (used on GRIT chair)

Design decision: Caster wheel diameter

Decision - 6”

Industry Wheelchair Castors range from 3”- 8” (8” seen on GRIT Chair)

https://www.spinlife.com/en/wheelchairwheelchoices2.cfm