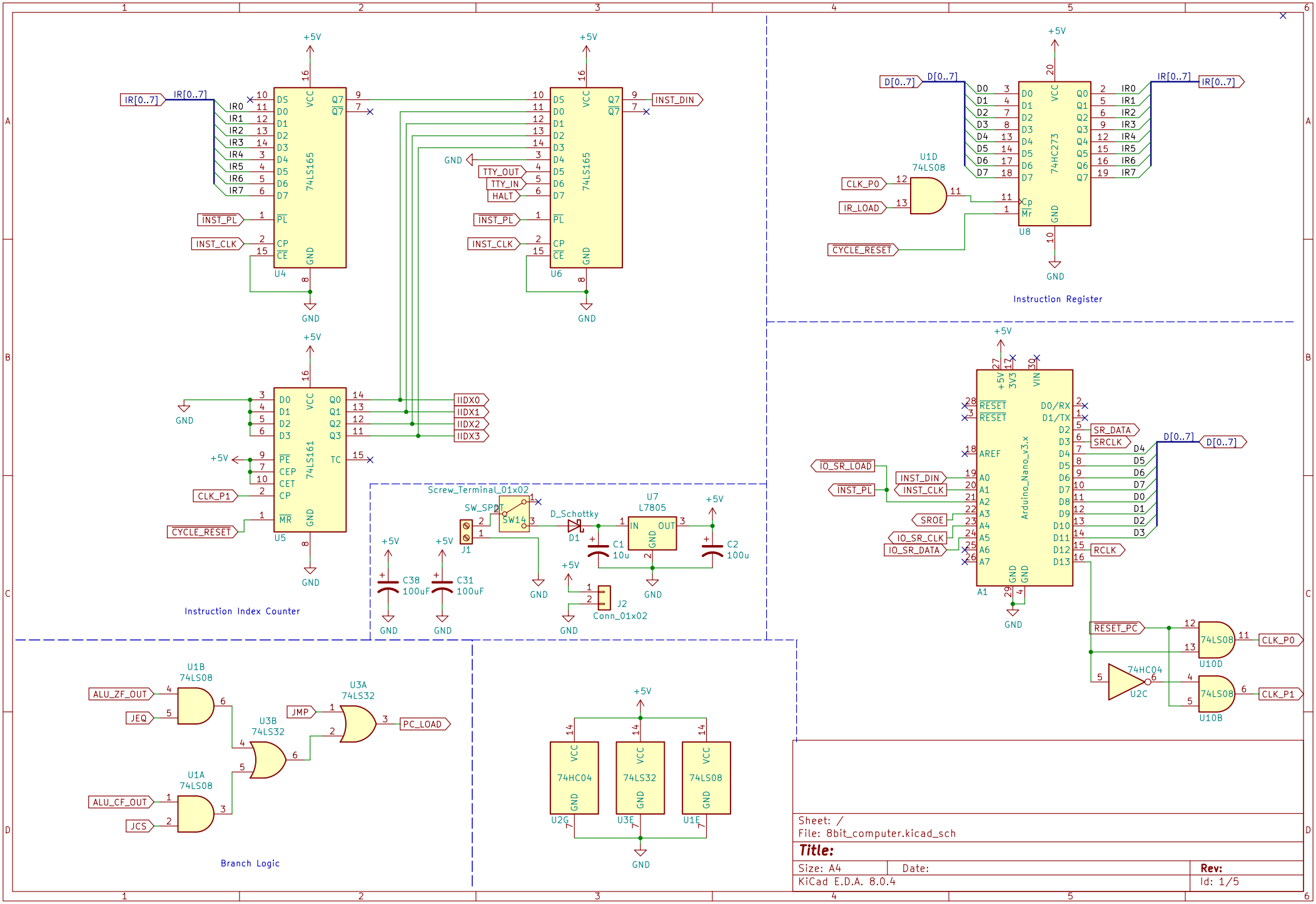
U4
74LS165
U6
74LS165
U5
74LS161
Instruction Index Counter
U8
74HC273
U1D
74LS08
Instruction Register
A1
Arduino_Nano_v3.x
U10D
74LS08
U10B
74LS08
U2C
74HC04
Screw_Terminal_01x02
SW_SPDT
SW14
D_Schottky
U7
L7805
C1
10u
C2
100u
C38
100uF
C31
100uF
J1
J2
Conn_01x02
U1B
74LS08
U1A
74LS08
U3B
74LS32
U3A
74LS32
Branch Logic
U2G
74HC04
U3E
74LS32
U1E
74LS08
Sheet: /
File: 8bit_computer.kicad_sch
Title:
Size: A4
Date:
Rev:
KiCad E.D.A. 8.0.4
Id: 1/5

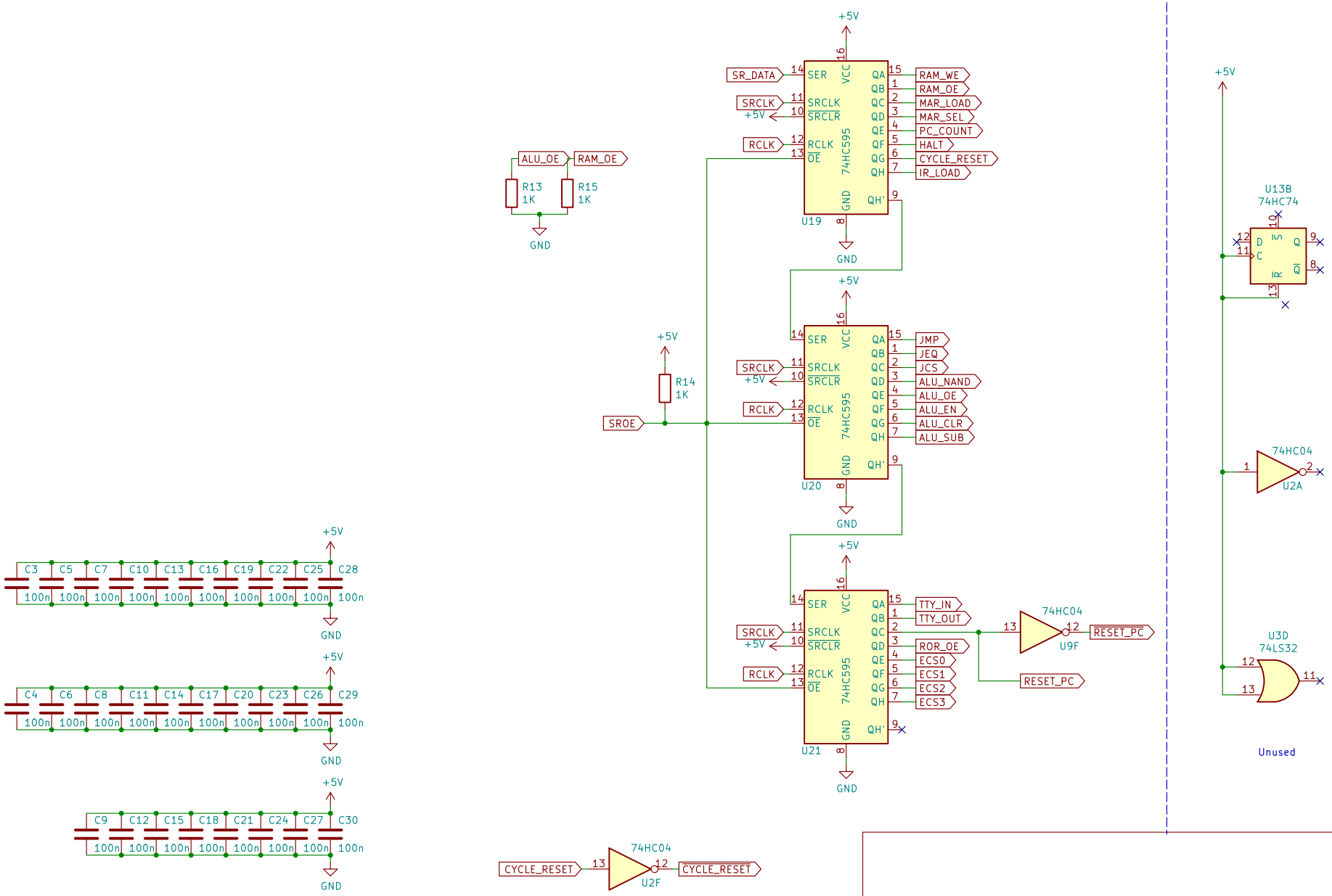

Sheet: /Sheet631DA043/
File: control_logic.kicad_sch

Title:

Size: A4	Date:	Rev:
KiCad E.D.A. 8.0.4		Id: 2/5

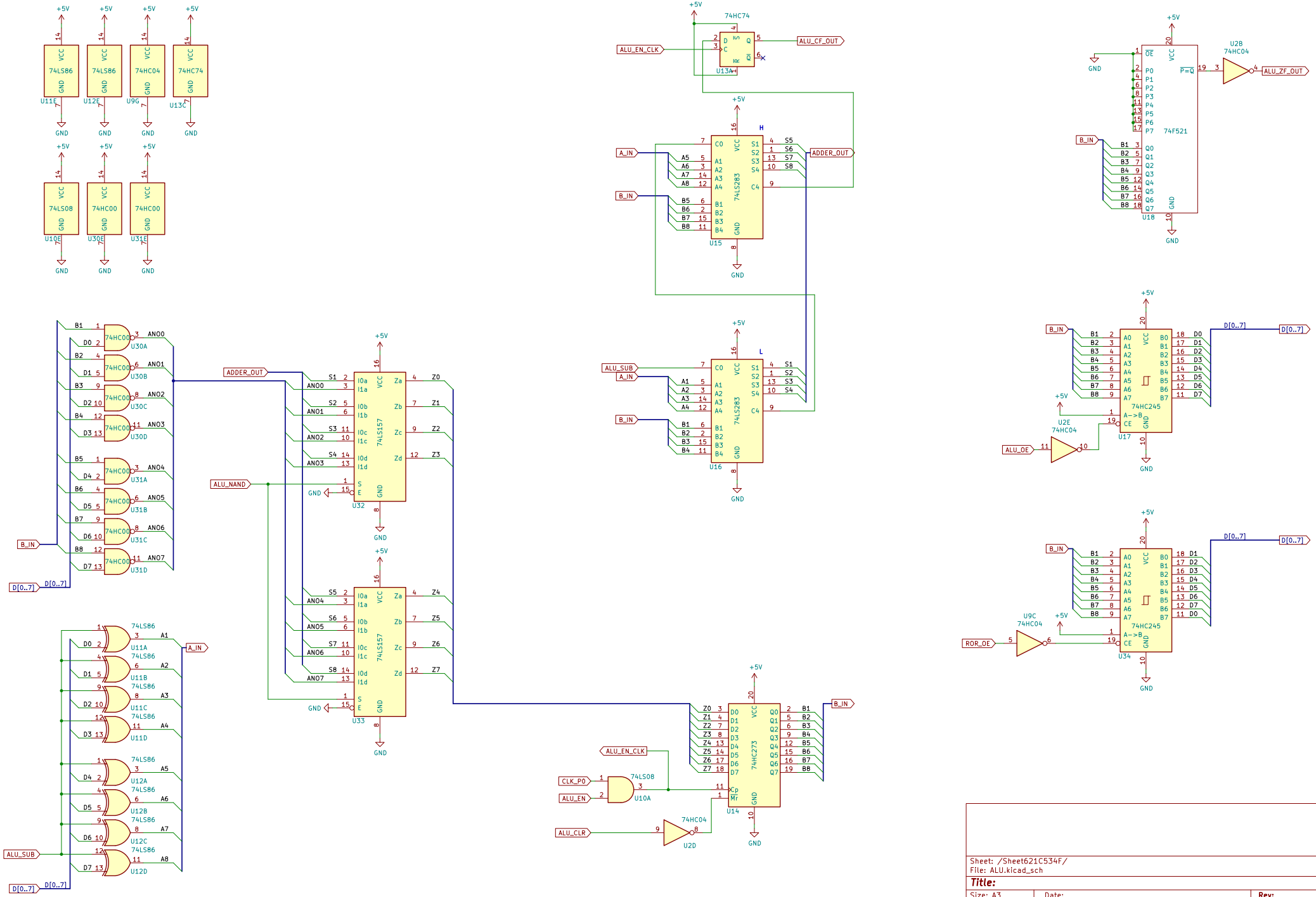

Sheet: /Sheet621C534F/
File: ALU.kicad_sch

Title:

Size: A3	Date:	Rev:
KiCad E.D.A. 8.0.4		Id: 3/5

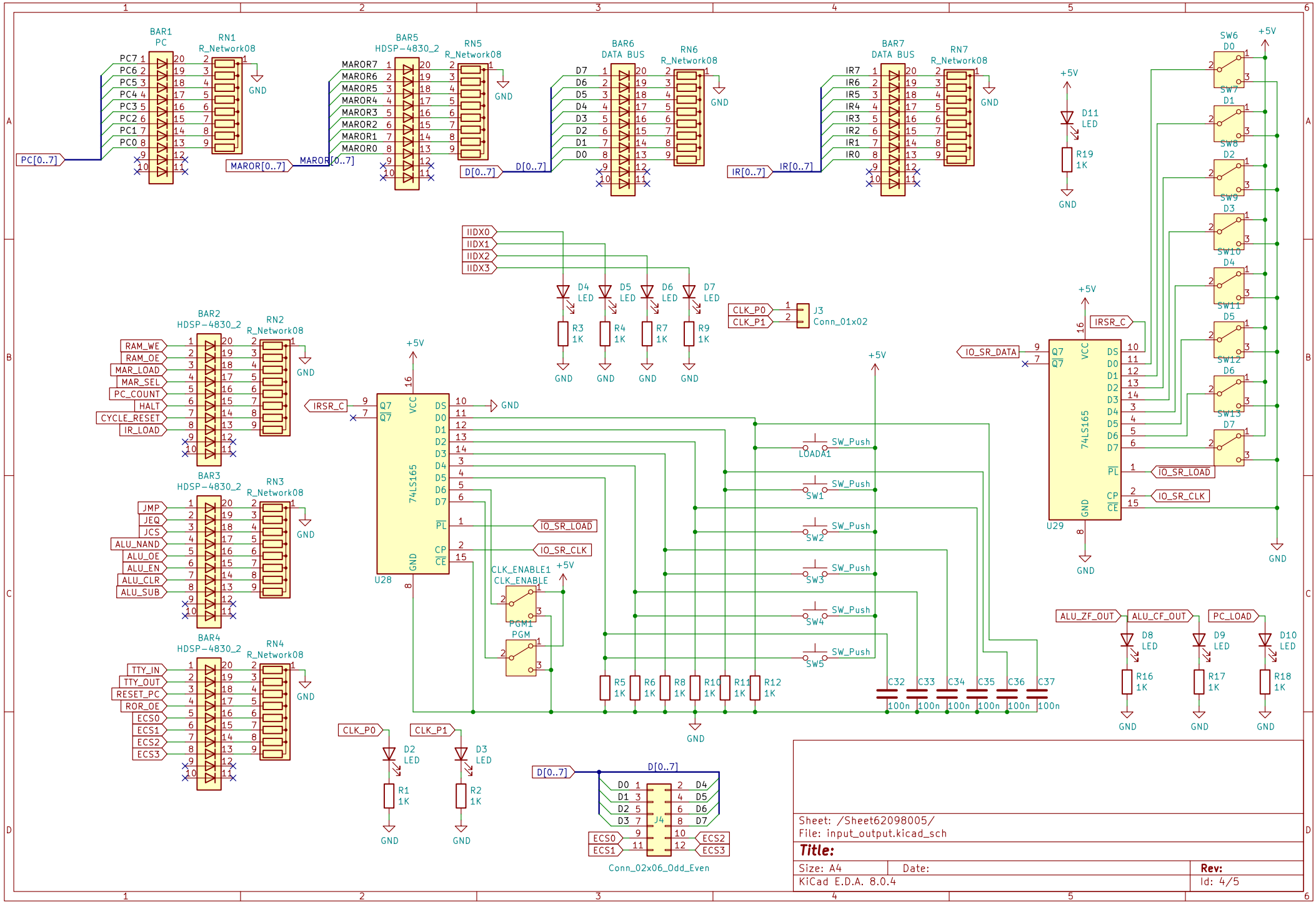
BAR1
PC
RN1
R_Network08
PC[0..7]
PC7
PC6
PC5
PC4
PC3
PC2
PC1
PC0
MAROR[0..7]
BAR5
HDSP-4830_2
RN5
MAROR7
MAROR6
MAROR5
MAROR4
MAROR3
MAROR2
MAROR1
MAROR0
BAR6
DATA BUS
RN6
D[0..7]
D7
D6
D5
D4
D3
D2
D1
D0
BAR7
DATA BUS
RN7
IR[0..7]
IR7
IR6
IR5
IR4
IR3
IR2
IR1
IR0
GND
+5V
D11
LED
R19
1K
SW6
D0
SW7
D1
SW8
D2
SW9
D3
SW10
D4
SW11
D5
SW12
D6
SW13
D7
IIDX0
IIDX1
IIDX2
IIDX3
D4
LED
D5
LED
D6
LED
D7
LED
R3
1K
R4
1K
R7
1K
R9
1K
CLK_P0
CLK_P1
J3
Conn_01x02
BAR2
HDSP-4830_2
RN2
RAM_WE
RAM_OE
MAR_LOAD
MAR_SEL
PC_COUNT
HALT
CYCLE_RESET
IR_LOAD
BAR3
HDSP-4830_2
RN3
JMP
JEQ
JCS
ALU_NAND
ALU_OE
ALU_EN
ALU_CLR
ALU_SUB
BAR4
HDSP-4830_2
RN4
TTY_IN
TTY_OUT
RESET_PC
ROR_OE
ECS0
ECS1
ECS2
ECS3
IRSR_C
Q7
Q7̄
VCC
DS
D0
D1
D2
D3
D4
D5
D6
D7
PL
CP
CE
GND
74LS165
U28
IO_SR_LOAD
IO_SR_CLK
CLK_ENABLE1
CLK_ENABLE
PGM1
PGM
LOADA1
SW1
SW2
SW3
SW4
SW5
SW_Push
R5
1K
R6
1K
R8
1K
R10
1K
R11
1K
R12
1K
C32
C33
C34
C35
C36
C37
100n
IO_SR_DATA
U29
ALU_ZF_OUT
ALU_CF_OUT
PC_LOAD
D8
LED
D9
LED
D10
LED
R16
1K
R17
1K
R18
1K
D2
LED
D3
LED
R1
1K
R2
1K
J4
Conn_02x06_Odd_Even
Sheet: /Sheet62098005/
File: input_output.kicad_sch
Title:
Size: A4
Date:
Rev:
KiCad E.D.A. 8.0.4
Id: 4/5

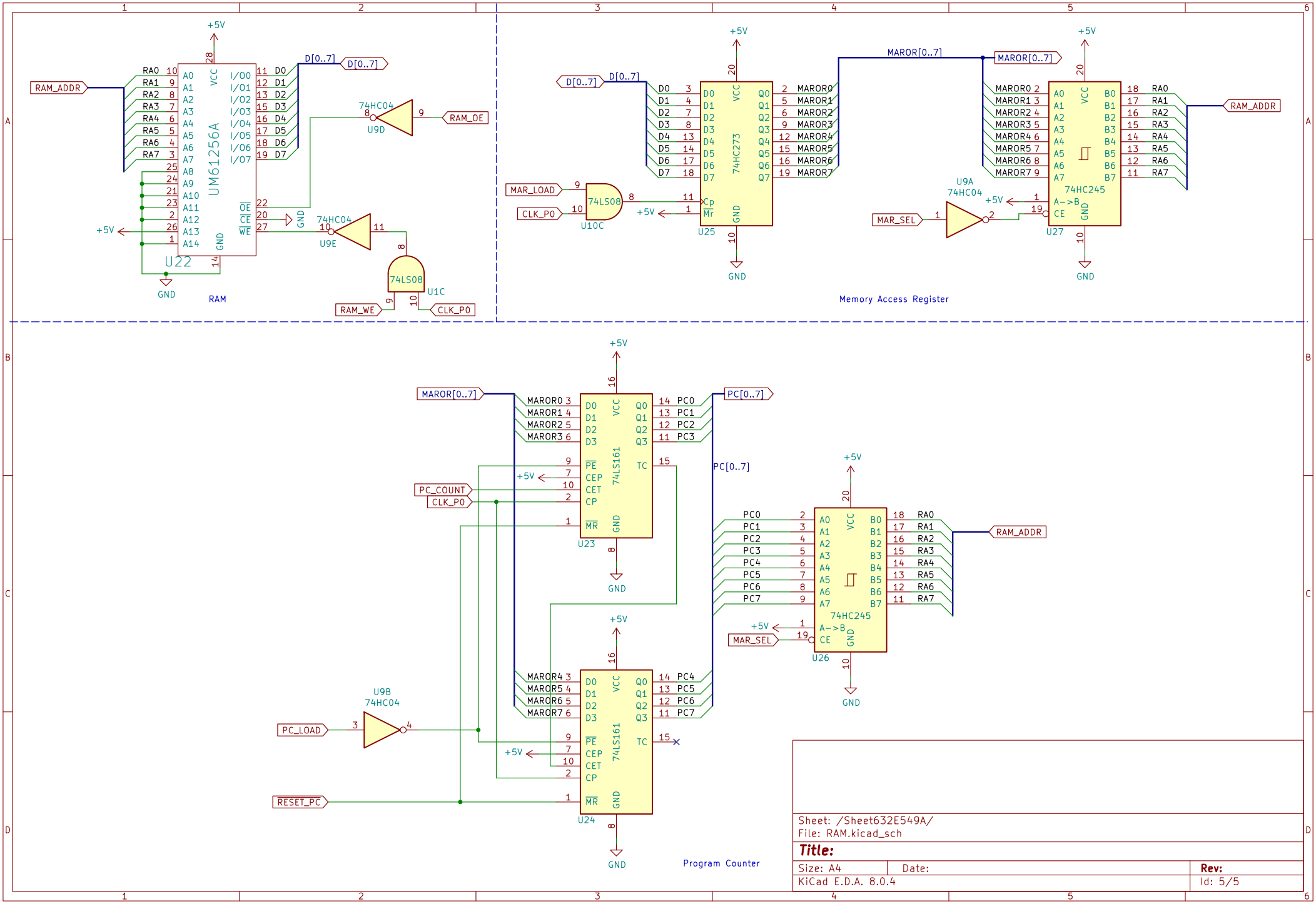
RAM
Memory Access Register
Program Counter
U22
UM61256A
U9D
74HC04
U9E
74HC04
U1C
74LS08
U10C
74LS08
U25
74HC273
U27
74HC245
U9A
74HC04
U23
74LS161
U24
74LS161
U26
74HC245
U9B
74HC04
RAM_ADDR
D[0..7]
RAM_OE
RAM_WE
CLK_P0
MAR_LOAD
MAR_SEL
MAROR[0..7]
PC[0..7]
PC_COUNT
PC_LOAD
RESET_PC
+5V
GND
Sheet: /Sheet632E549A/
File: RAM.kicad_sch
Title:
Size: A4
Date:
Rev:
KiCad E.D.A. 8.0.4
Id: 5/5