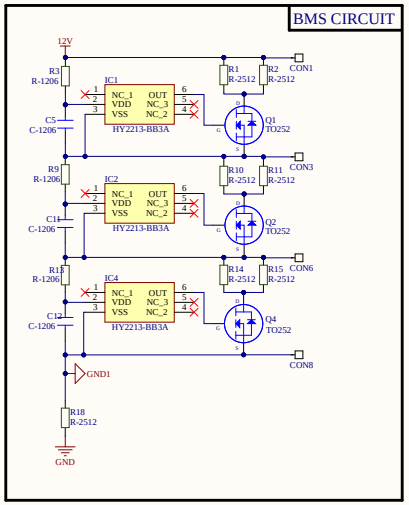

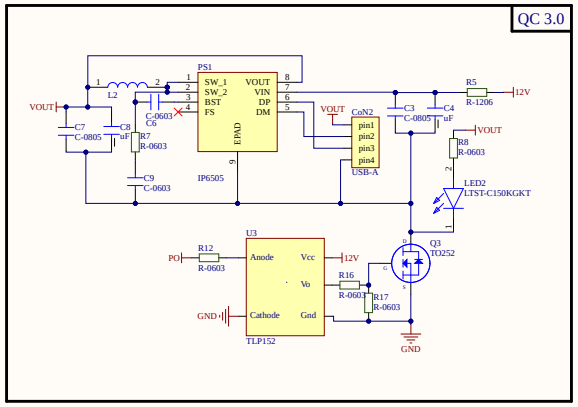

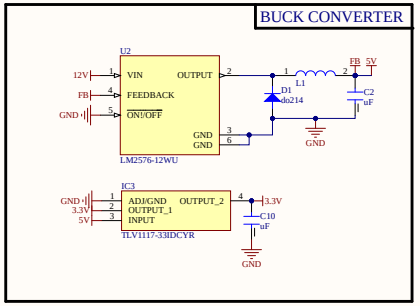

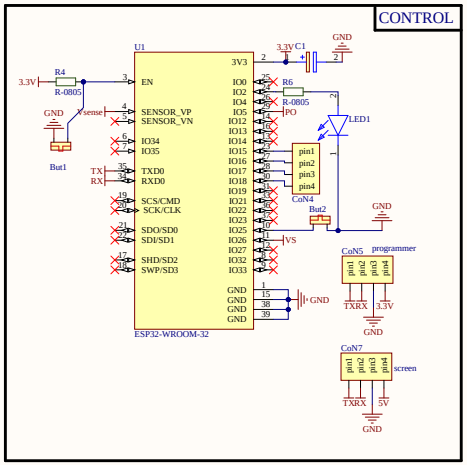

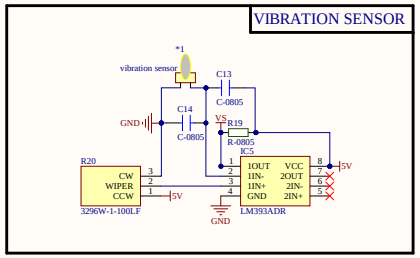

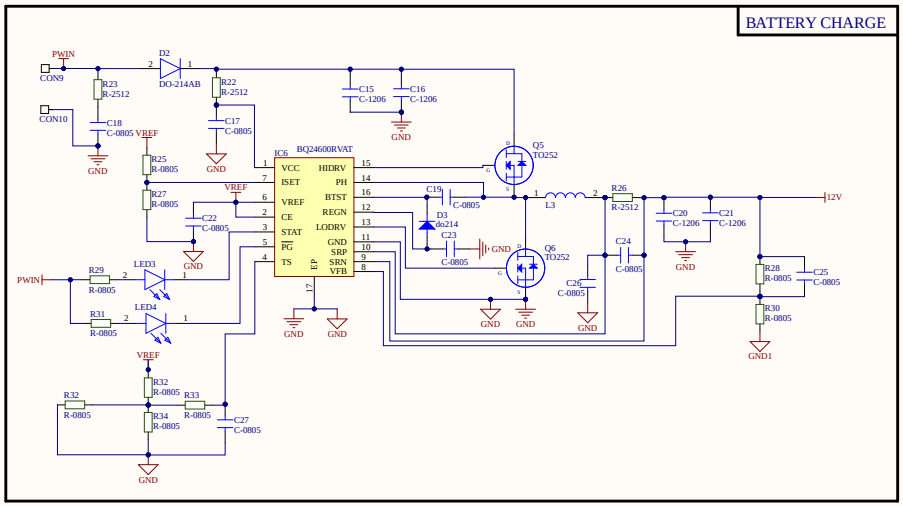

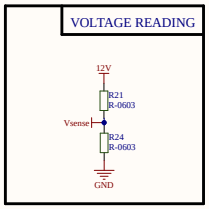

Title		
Size A2	Number	Revision
Date: 5/08/2021	Sheet of	
File: C:\Users\..\Charger_Schematic.SchDoc	Drawn By:	

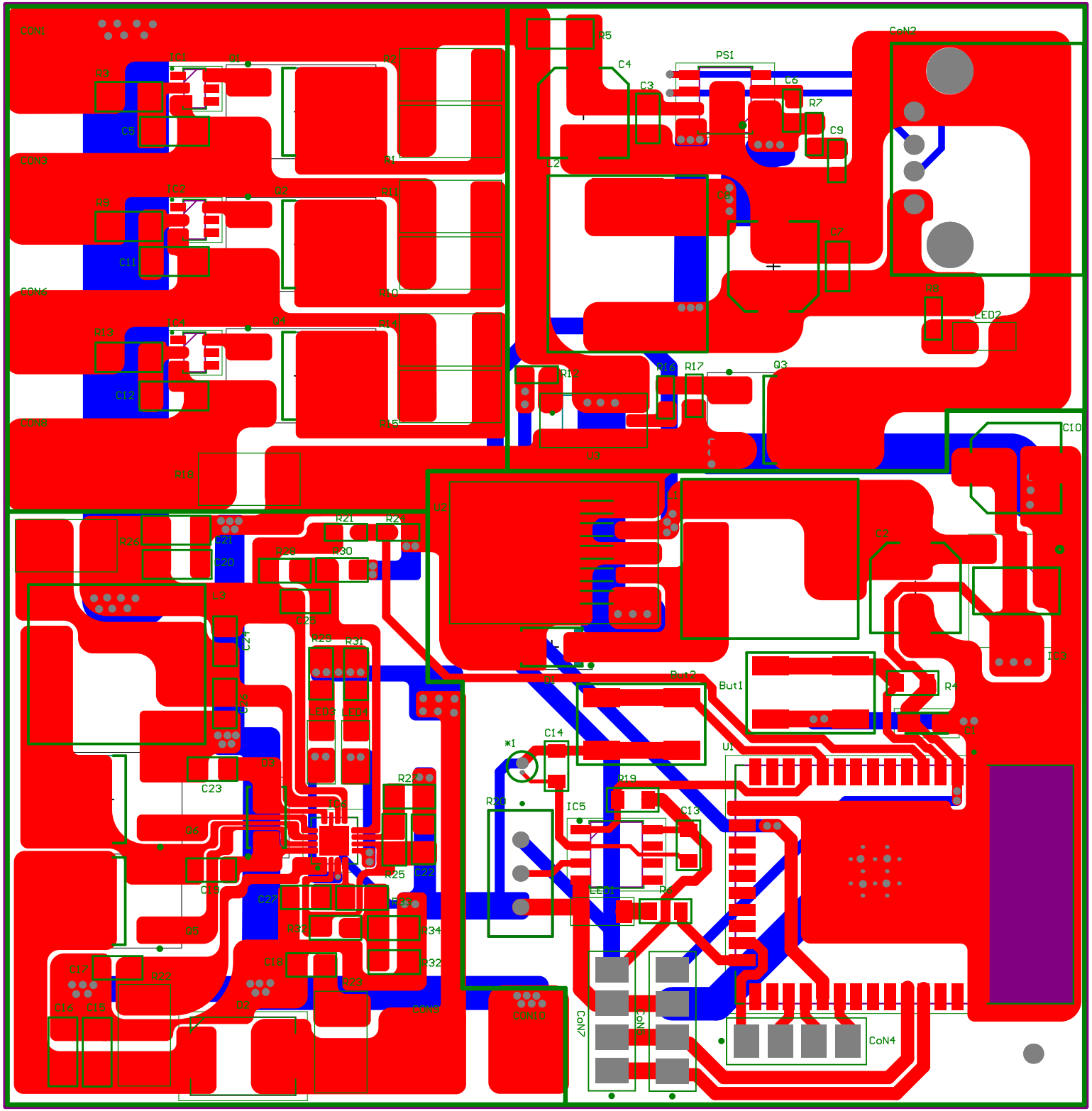
CON1
IC1
Q1
R2
R3
C5
R1
CON3
IC2
Q2
R11
R9
C11
R10
CON6
IC4
Q4
R14
R13
C12
R15
CON8
R18
R5
C4
C3
PS1
C6
R7
C9
CON2
I2
C8
C7
R8
LED2
R12
R16
R17
Q3
U3
C10
U2
R21
R24
R26
C21
C20
D28
R30
C2
L3
C22
R29
R31
IC3
Q1
But2
But1
R4
LED3
LED4
C1
*I
C14
U1
D3
R27
R19
C23
R28
IC5
C13
Q6
R25
C19
C27
LED1
R6
R33
R34
Q5
C18
R32
C17
R22
R23
C16
C15
D2
CON9
CON10
CON7
CON5
CON4