PIPELINED CPU DESIGN

1. **Implement pipeline stall to handle RAW data hazard after Load instruction.**

In the example shown in Figure 1, the LW instruction does not read data until the end of CC4. Thus, data cannot be forward to ADD instruction at the end of CC3. However, the Load instruction can forward data to the 2nd next and later instruction.

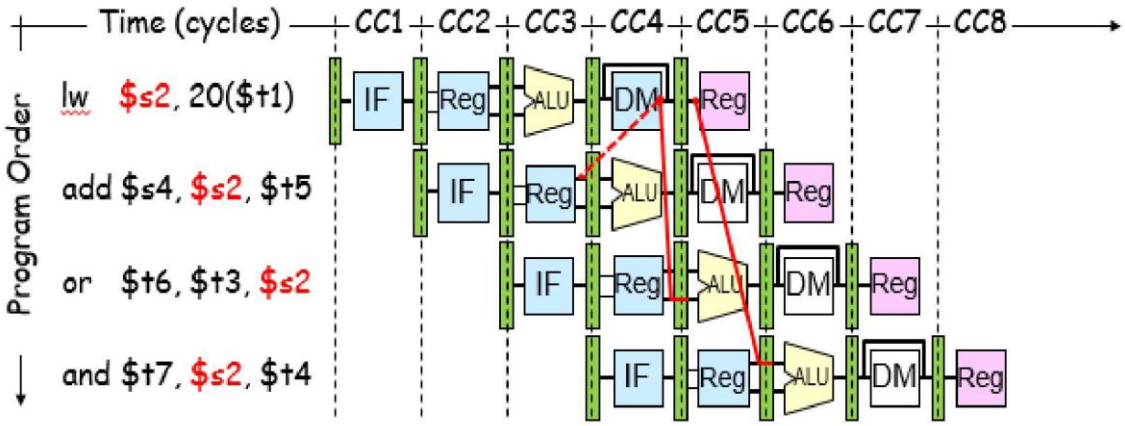

Fig.1. Data hazard following a Load instruction.

Whenever a RAW data hazard after a Load instruction occurs, we have no choice but to stall the pipeline. Stalling the pipeline requires that the instruction in the ID stage be replaced by a NOP (No Operation) instruction and freezing the content of PC and Instruction registers for one clock cycle. This is achieved by replacing the control signals by 0 signals (called a Bubble) and disabling the PC and IR registers as illustrated in Figure 2. The Condition for stalling the pipeline is as follows:

if ((EX.MemRead == 1) // Detect Load in EX stage and
(ForwardA==1 or ForwardB==1)) Stall // Data Hazard

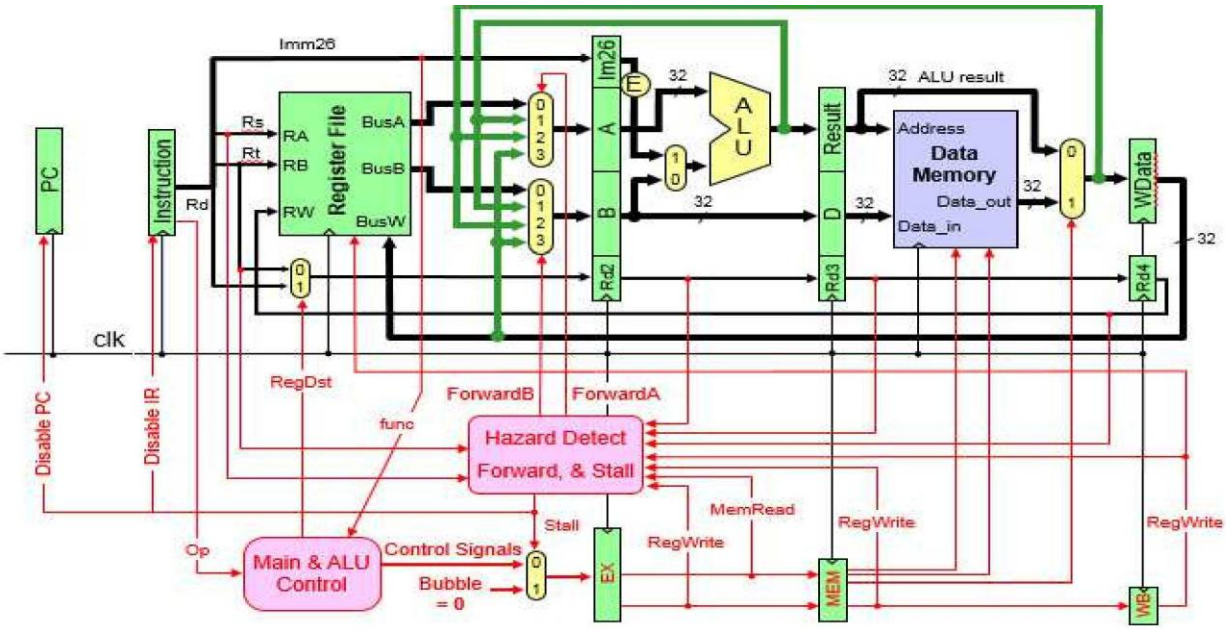

Fig.2. Pipeline stall due to RAW data hazard following a Load instruction.

2. Handling control hazards

Jump and Branch can cause great performance loss. Jump instruction needs only the jump target address while Branch instruction needs two things:

- Branch Result Taken or Not Taken
- Branch Target Address
  - PC + 4 — If Branch is NOT taken
  - PC + 4 + 4 × immediate — If Branch is Taken

Jump and Branch targets are computed in EX stage at which point two instructions have already been fetched. For Jump, the two instructions need to be flushed. For Branch, the two instructions are flushed if Branch is Taken. Figure 3 illustrates an example of handling a control hazard by replacing the two fetched instructions by bubbles. Control logic detects a Branch instruction in the 2nd Stage. The ALU computes the Branch outcome in the 3rd Stage. Next1 and Next2 instructions will be fetched anyway. Thus, we need to convert Next1 and Next2 into bubbles if branch is taken.

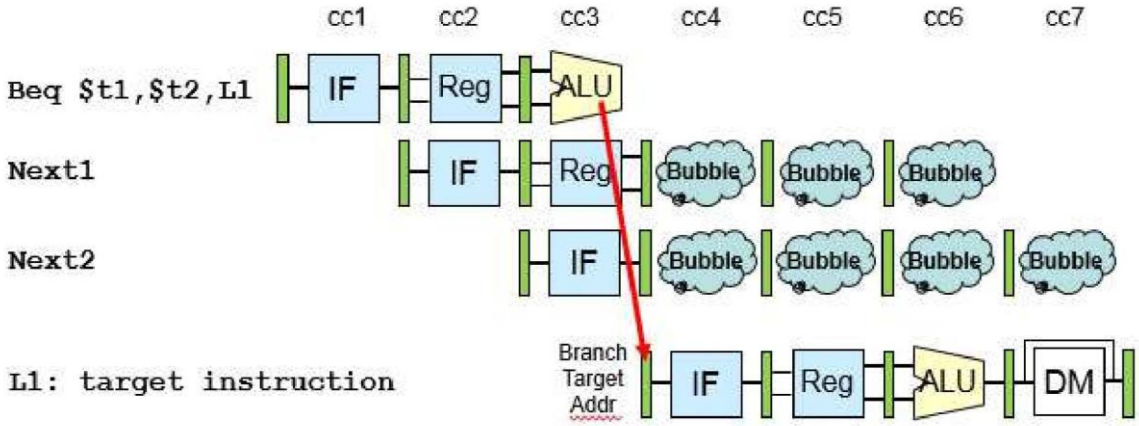

Fig. 3: Example of handling a control hazard.

Converting the instruction in the 2nd stage into a bubble can be achieved by replacing the control signals by a bubble. Converting the instruction in 1st stage into a NOP instruction is achieved by Resetting the IR register using synchronous reset. The reset is signal is connected to the PCSrc signal which is set when the branch is taken. Figure 4 illustrates the implementation of handling control hazards.

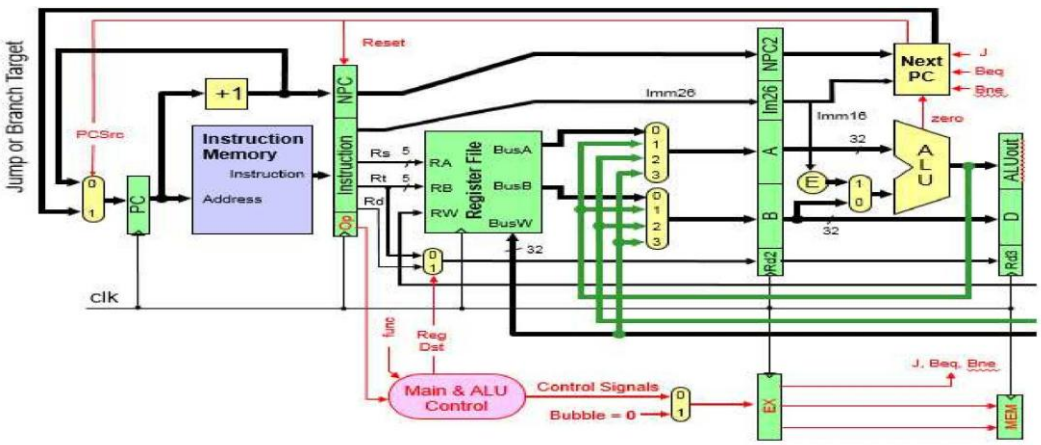

Fig. 4: Handling control hazards.

PROJECT TASKS

1. **Implement handling of data hazard** occurring after LOAD instruction in your pipelined CPU design.
2. **Test the correctness of your implementation** by running the MIPS code fragment given below and verify its correct execution:

```
I1:    ADDI $s0, $0, 10
I2:    ADDI $s1, $0, 5
I3:    SLL  $s0, $s0, 4
I4:    LW   $s2, 0($s0)
I5:    ADD  $s2, $s2, $s1
I6:    SW   $s2, 4($s0)
```

3. **Implement control hazard handling** in your pipelined CPU design.
4. **Test the correctness of your implementation of handling control hazards** by running the following MIPS code fragment and verify its correct execution:

```
I1:    ADDI $a1, $0, 10
I2:    ADD $t5, $0, $0
I3:    LW $t2, 0($t5)
I4:    ADD $t3, $t2, $t2
I5:    SW $t3, 0($t5)
I6:    ADDI $a1, $a1, -1
I7:    ADDI $t5, $t5, 4
I8:    BNE $a1, $0, I3
```

GRUP ÇALIŞMASI YÖNTEMİ

1. En fazla 5 kişilik gruplar halinde proje hazırlanabilir. Proje raporu ön sayfasına grup üyelerinin isimleri yazılmalıdır.
2. Grup üyelerinin her biri projedeki 2 temel aktivite olan, • Donanımsal Tasarım • Yazılım Test faaliyetlerinde rol alacak şekilde koordine olmalıdırlar.
3. Proje faaliyetlerini tamamlamak için gereken alt işlemleri zamanlama diyagramı üzerinde bir icra planı hazırlanmalı ve her bir madde bir grup üyesine verilmelidir.
4. Şema üzerinde her bir grup üyesinin yapacağı işler gösterilmelidir.
5. Grup içinde 1 Proje Yöneticisi seçilmelidir. Proje Yöneticisi projenin tamamını koordine etmelidir.
6. Ayrıca proje aktivitelerini tartışmak üzere yapılan toplantılar da bu planda yer almalıdır.
7. Son teslim tarihi: **26 Mayıs 2025**

Download Logisim : https://sourceforge.net/projects/circuit/
Logisim Homepage: https://www.cburch.com/logisim/download.html
Kaynak: PipelinedProcessors.pdf