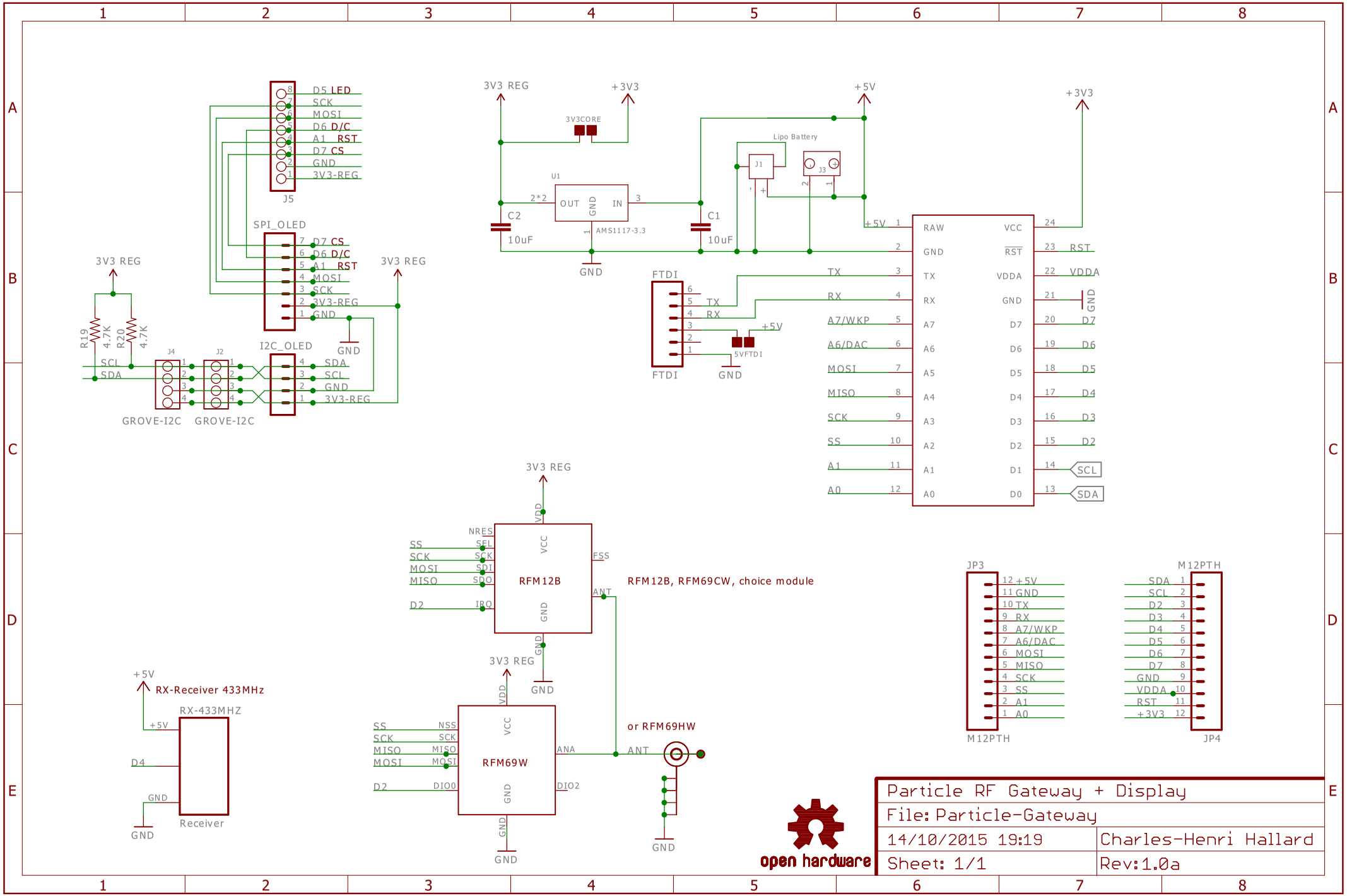
J5
D5 LED
SCK
MOSI
D6 D/C
A1 RST
D7 CS
GND
3V3-REG
SPI_OLED
D7 CS
D6 D/C
A1 RST
MOSI
SCK
3V3-REG
GND
I2C_OLED
SDA
SCL
GND
3V3-REG
3V3 REG
R19 4.7K
R20 4.7K
SCL
SDA
J4
J2
GROVE-I2C
GROVE-I2C
3V3 REG
+3V3
3V3CORE
U1
OUT
GND
IN
AMS1117-3.3
2*2
C2 10uF
C1 10uF
GND
+5V
Lipo Battery
J1
J3
FTDI
TX
RX
+5V
5VFTDI
GND
RAW
GND
TX
RX
A7/WKP
A6/DAC
MOSI
MISO
SCK
SS
A1
A0
VCC
RST
VDDA
GND
D7
D6
D5
D4
D3
D2
D1
D0
SCL
SDA
3V3 REG
VDD
NRES
SS
SCK
MOSI
MISO
D2
SEL
SCK
SDI
SDO
IRQ
VCC
RFM12B
GND
FSS
ANT
RFM12B, RFM69CW, choice module
GND
3V3 REG
VDD
SS
SCK
MISO
MOSI
D2
NSS
SCK
MISO
MOSI
DIO0
VCC
RFM69W
GND
ANA
DIO2
or RFM69HW
ANT
GND
GND
+5V
RX-Receiver 433MHz
RX-433MHZ
+5V
D4
GND
Receiver
GND
JP3
12 +5V
11 GND
10 TX
9 RX
8 A7/WKP
7 A6/DAC
6 MOSI
5 MISO
4 SCK
3 SS
2 A1
1 A0
M12PTH
M12PTH
SDA 1
SCL 2
D2 3
D3 4
D4 5
D5 6
D6 7
D7 8
GND 9
VDDA 10
RST 11
+3V3 12
JP4
open hardware
Particle RF Gateway + Display
File: Particle-Gateway
14/10/2015 19:19
Charles-Henri Hallard
Sheet: 1/1
Rev:1.0a