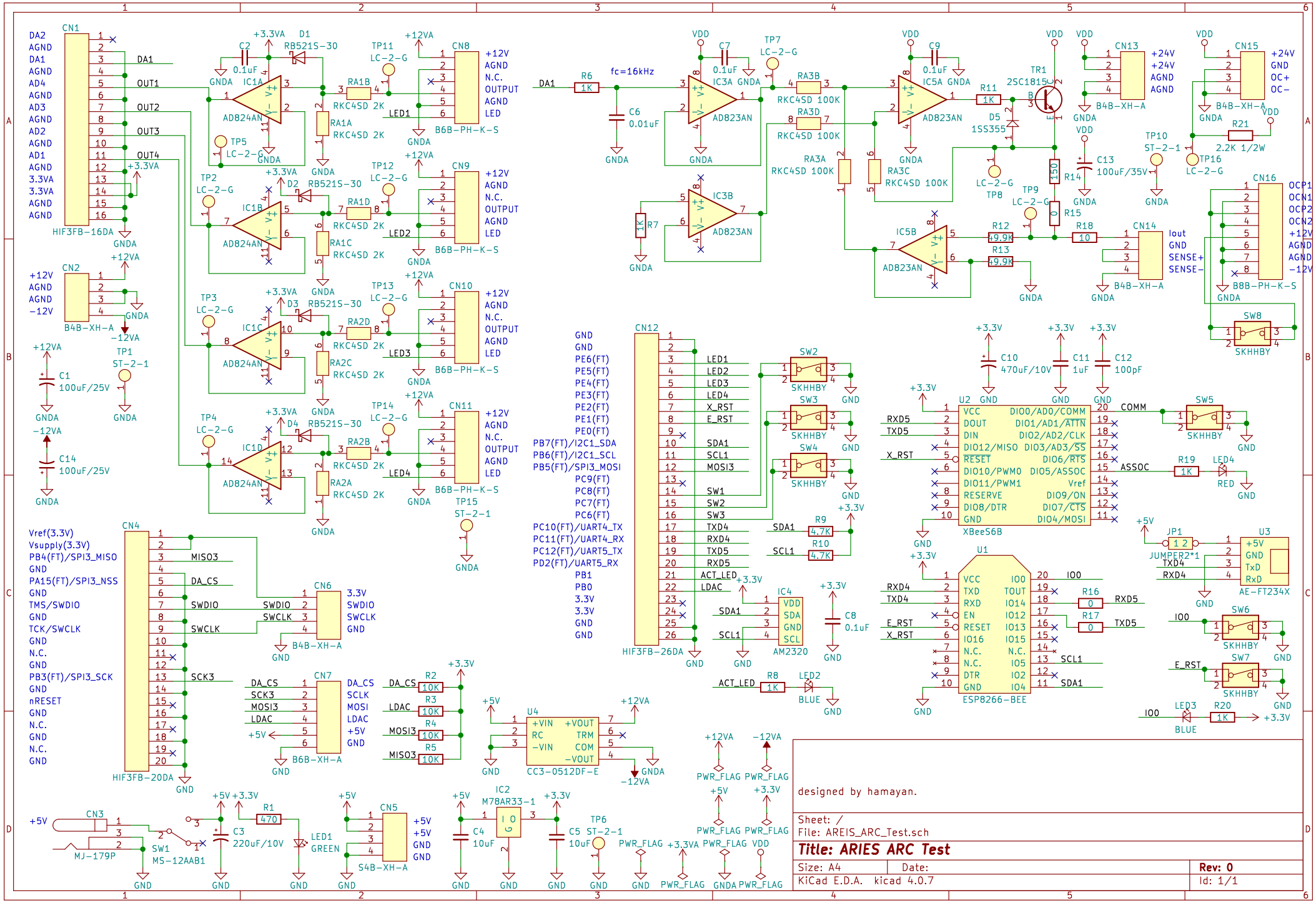
CN1
HIF3FB-16DA
DA2
AGND
DA1
AGND
AD4
AGND
AD3
AGND
AD2
AGND
AD1
AGND
3.3VA
3.3VA
AGND
AGND
OUT1
OUT2
OUT3
OUT4
CN2
B4B-XH-A
+12V
AGND
AGND
-12V
IC1A
IC1B
IC1C
IC1D
AD824AN
RA1B
RA1A
RA1D
RA1C
RA2D
RA2C
RA2B
RA2A
RKC4SD 2K
D1
D2
D3
D4
RB521S-30
C2
0.1uF
TP1
ST-2-1
C1
100uF/25V
C14
100uF/25V
TP2
TP3
TP4
TP5
LC-2-G
TP11
TP12
TP13
TP14
TP15
CN8
CN9
CN10
CN11
B6B-PH-K-S
+12V
AGND
N.C.
OUTPUT
AGND
LED
LED1
LED2
LED3
LED4
CN4
HIF3FB-20DA
Vref(3.3V)
Vsupply(3.3V)
PB4(FT)/SPI3_MISO
GND
PA15(FT)/SPI3_NSS
GND
TMS/SWDIO
GND
TCK/SWCLK
GND
N.C.
GND
PB3(FT)/SPI3_SCK
GND
nRESET
GND
N.C.
GND
N.C.
GND
MISO3
DA_CS
SWDIO
SWCLK
SCK3
CN6
B4B-XH-A
3.3V
SWDIO
SWCLK
GND
CN7
B6B-XH-A
DA_CS
SCK3
MOSI3
LDAC
+5V
SCLK
MOSI
R2
R3
R4
R5
10K
CN3
MJ-179P
SW1
MS-12AAB1
C3
220uF/10V
R1
470
LED1
GREEN
CN5
S4B-XH-A
IC2
M78AR33-1
C4
10uF
C5
10uF
TP6
ST-2-1
PWR_FLAG
U4
CC3-0512DF-E
+VIN
RC
-VIN
+VOUT
TRM
COM
-VOUT
+12VA
-12VA
GNDA
R6
1K
fc=16kHz
C6
0.01uF
IC3A
IC3B
AD823AN
R7
C7
0.1uF
TP7
RA3B
RA3D
RA3A
RA3C
RKC4SD 100K
IC5A
IC5B
C9
R11
1K
D5
1SS355
TR1
2SC1815
R12
49.9K
R13
49.9K
TP8
TP9
R14
150
R15
0
R18
10
C13
100uF/35V
CN13
B4B-XH-A
+24V
AGND
CN14
B4B-XH-A
Iout
GND
SENSE+
SENSE-
CN15
B4B-XH-A
GND
OC+
OC-
R21
2.2K 1/2W
TP10
TP16
CN16
B8B-PH-K-S
OCP1
OCN1
OCP2
OCN2
+12V
AGND
AGND
-12V
SW8
SKHHBY
CN12
HIF3FB-26DA
GND
PE6(FT)
PE5(FT)
PE4(FT)
PE3(FT)
PE2(FT)
PE1(FT)
PE0(FT)
PB7(FT)/I2C1_SDA
PB6(FT)/I2C1_SCL
PB5(FT)/SPI3_MOSI
PC9(FT)
PC8(FT)
PC7(FT)
PC6(FT)
PC10(FT)/UART4_TX
PC11(FT)/UART4_RX
PC12(FT)/UART5_TX
PD2(FT)/UART5_RX
PB1
PB0
3.3V
3.3V
GND
GND
LED1
LED2
LED3
LED4
X_RST
E_RST
SDA1
SCL1
MOSI3
SW1
SW2
SW3
TXD4
RXD4
TXD5
RXD5
ACT_LED
LDAC
SW2
SW3
SW4
SKHHBY
R9
4.7K
R10
4.7K
IC4
AM2320
VDD
SDA
GND
SCL
C8
0.1uF
R8
1K
LED2
BLUE
C10
470uF/10V
C11
1uF
C12
100pF
U2
XBeeS6B
VCC
DOUT
DIN
DIO12/MISO
RESET
DIO10/PWM0
DIO11/PWM1
RESERVE
DIO8/DTR
GND
DIO0/AD0/COMM
DIO1/AD1/ATTN
DIO2/AD2/CLK
DIO3/AD3/SS
DIO6/RTS
DIO5/ASSOC
Vref
DIO9/ON
DIO7/CTS
DIO4/MOSI
COMM
ASSOC
R19
1K
LED4
RED
U1
ESP8266-BEE
VCC
TXD
RXD
EN
RESET
IO16
N.C.
N.C.
DTR
GND
IO0
TOUT
IO14
IO12
IO13
IO15
N.C.
IO5
IO2
IO4
R16
0
R17
0
JP1
JUMPER2*1
U3
AE-FT234X
+5V
GND
TxD
RxD
SW6
SW7
LED3
R20
1K
designed by hamayan.
Sheet: /
File: AREIS_ARC_Test.sch
Title: ARIES ARC Test
Size: A4
Date:
Rev: 0
KiCad E.D.A. kicad 4.0.7
Id: 1/1