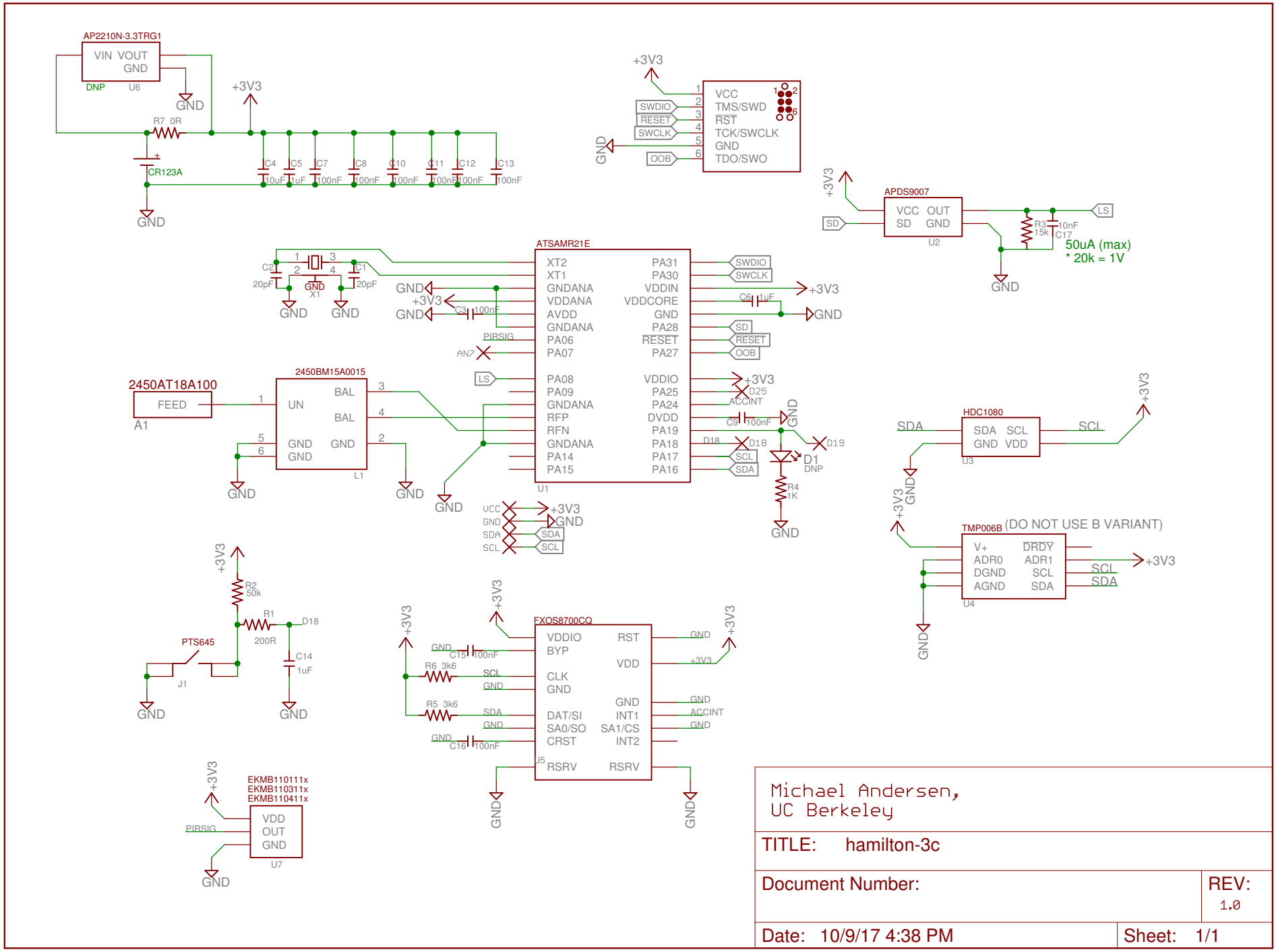
AP2210N-3.3TRG1
VIN VOUT
GND
DNP U6
R7 0R
CR123A
C4 10uF
C5 1uF
C7 100nF
C8 100nF
C10 100nF
C11 100nF
C12 100nF
C13 100nF
+3V3
GND
VCC
TMS/SWD
RST
TCK/SWCLK
GND
TDO/SWO
SWDIO
RESET
SWCLK
OOB
APDS9007
VCC OUT
SD GND
U2
R3 15k
C17 10nF
LS
50uA (max)
* 20k = 1V
ATSAMR21E
XT2
XT1
GNDANA
VDDANA
AVDD
GNDANA
PA06
PA07
PA08
PA09
GNDANA
RFP
RFN
GNDANA
PA14
PA15
PA31
PA30
VDDIN
VDDCORE
GND
PA28
RESET
PA27
VDDIO
PA25
PA24
DVDD
PA19
PA18
PA17
PA16
U1
C2 20pF
C1 20pF
X1
C3 100nF
C6 1uF
PIRSIG
AN7
D25
ACCINT
C9 100nF
D18
D19
D1 DNP
R4 1K
2450AT18A100
FEED
A1
2450BM15A0015
UN
BAL
BAL
GND
GND
L1
VCC
GND
SDA
SCL
HDC1080
SDA SCL
GND VDD
U3
TMP006B (DO NOT USE B VARIANT)
V+
ADR0
DGND
AGND
DRDY
ADR1
SCL
SDA
U4
R2 50k
R1 200R
C14 1uF
PTS645
J1
FXOS8700CQ
VDDIO
BYP
CLK
GND
DAT/SI
SA0/SO
CRST
RSRV
RST
VDD
GND
INT1
SA1/CS
INT2
RSRV
U5
C15 100nF
C16 100nF
R6 3k6
R5 3k6
EKMB110111x
EKMB110311x
EKMB110411x
VDD
OUT
GND
U7
Michael Andersen,
UC Berkeley
TITLE: hamilton-3c
Document Number:
REV: 1.0
Date: 10/9/17 4:38 PM
Sheet: 1/1