CSE 201

DFS

Last Class's Topic

- Graph Representation
  - Adjacency Matrix
  - Adjacency List
- BFS – Breadth First Search

Breadth-First Search: The Code

```
Data: color[V], prev[V],d[V]

BFS(G) // starts from here
{
   for each vertex u ∈
  V-{s}
   {
      color[u]=WHITE;
   prev[u]=NIL;
   d[u]=inf;
   }
   color[s]=GRAY;
  d[s]=0; prev[s]=NIL;
  Q=empty;
  ENQUEUE(Q,s);
```

```
 While(Q not empty)
 {
   u = DEQUEUE(Q);
   for each v ∈ adj[u]{
     if (color[v] == WHITE){
          color[v] = GREY;
          d[v] = d[u] + 1;
          prev[v] = u;
          Enqueue(Q, v);
     }
   }
   color[u] = BLACK;
 }
}
```

Breadth-First Search: Print Path

```
Data: color[V], prev[V],d[V]

Print-Path(G, s, v)
{
   if(v==s)
    print(s)
    else if(prev[v]==NIL)
    print(No path);
   else{
    Print-Path(G,s,prev[v]);
    print(v);
   }
}
```

BFS – Questions

- Find the shortest path between “A” and “B” (with path)? When will it fail?
- Find the most distant node from start node “A”
- How can we detect that there exists no path between A and B using BFS?
- Print all of those nodes that are at distance 2 from source vertex “S”.
- How can we modify BFS algorithm to check the bipartiteness of a graph?
- Is it possible to answer that there exists more than one path from “S” to “T” with minimum path cost?

Depth-First Search

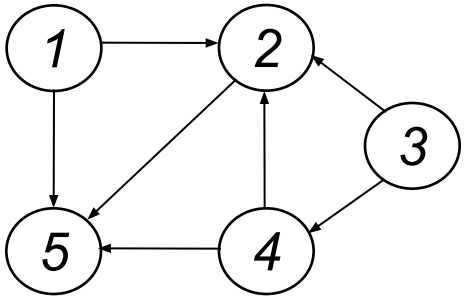

- **Input:**
  - G = (V, E) (No source vertex given!)
- **Goal**:
  - Explore the edges of G to "discover" every vertex in V starting at the most current visited node
  - Search may be repeated from multiple sources
- **Output:**
  - 2 **timestamps** on each vertex:
    - d[v] = discovery time
    - f[v] = finishing time (done with examining v's adjacency list)
  - Depth-first forest

Depth-First Search

- Search "deeper" in the graph whenever possible
- Edges are explored out of the most recently discovered vertex v that still has unexplored edges

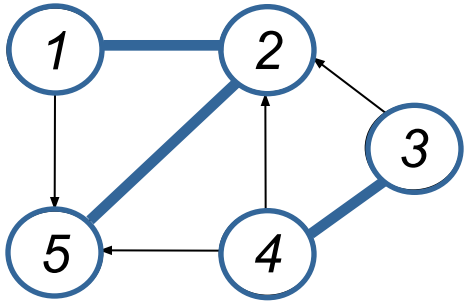

- *After all edges of v have been explored, the search "backtracks" from the parent of v*
- *The process continues until all vertices reachable from the original source have been discovered*
- *If undiscovered vertices remain, choose one of them as a new source and repeat the search from that vertex*
- *DFS creates a "depth-first forest"*

DFS Additional Data Structures

- Global variable: time-stamp
  - Incremented when nodes are discovered or finished
- `color[u]` – similar to BFS
  - White before discovery, gray while processing and black when finished processing
- `prev[u]` – predecessor of `u`
- `d[u]`, `f[u]` – discovery and finish times

$$1 \le d[u] < f[u] \le 2|V|$$

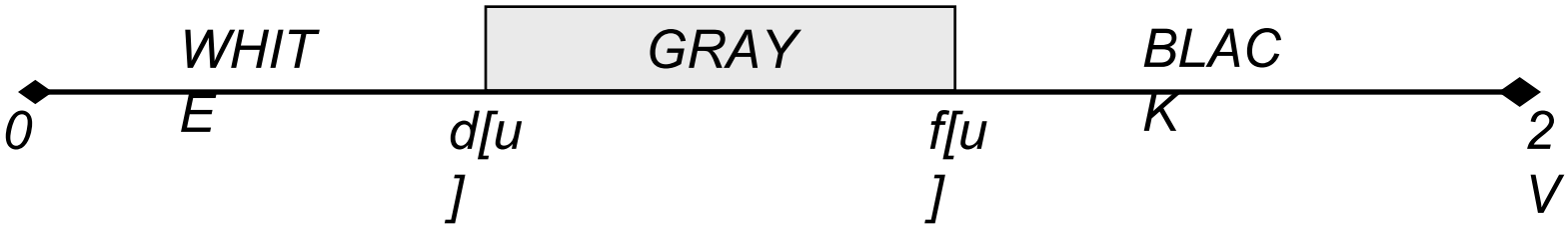

Depth-First Search: The Code

```
Data: color[V], time,
      prev[V],d[V], f[V]
DFS(G) // where prog starts
{                                  Initialize
   for each vertex u ∈ V
   {
      color[u] = WHITE;
   prev[u]=NIL;
   f[u]=inf; d[u]=inf;
   }
   time = 0;
   for each vertex u ∈ V
     if (color[u] == WHITE)
         DFS_Visit(u);
}
```

```
DFS_Visit(u)
{
   color[u] = GREY;
   time = time+1;
   d[u] = time;
   for each v ∈ Adj[u]
   {
      if(color[v] == WHITE){
     prev[v]=u;
         DFS_Visit(v);}
   }
   color[u] = BLACK;
   time = time+1;
   f[u] = time;
}
```

Depth-First Search: The Code

```
Data: color[V], time,
      prev[V],d[V], f[V]
DFS(G) // where prog starts
{
   for each vertex u ∈ V
   {
      color[u] = WHITE;
   prev[u]=NIL;
   f[u]=inf; d[u]=inf;
   }
   time = 0;
   for each vertex u ∈ V
     if (color[u] == WHITE)
         DFS_Visit(u);
}
```

```
DFS_Visit(u)
{
   color[u] = GREY;
   time = time+1;
   d[u] = time;
   for each v ∈ Adj[u]
   {
      if(color[v] == WHITE){
     prev[v]=u;
         DFS_Visit(v);}
   }
   color[u] = BLACK;
   time = time+1;
   f[u] = time;
}
```

What does `u[d]` *represent?*

Depth-First Search: The Code

```
Data: color[V], time,
      prev[V],d[V], f[V]
DFS(G) // where prog starts
{
   for each vertex u ∈ V
   {
      color[u] = WHITE;
   prev[u]=NIL;
   f[u]=inf; d[u]=inf;
   }
   time = 0;
   for each vertex u ∈ V
     if (color[u] == WHITE)
         DFS_Visit(u);
}
```

```
DFS_Visit(u)
{
   color[u] = GREY;
   time = time+1;
   d[u] = time;
   for each v ∈ Adj[u]
   {
      if(color[v] == WHITE){
     prev[v]=u;
         DFS_Visit(v);}
   }
   color[u] = BLACK;
   time = time+1;
   f[u] = time;
}
```

What does `f[d]` *represent?*

Depth-First Search: The Code

```
Data: color[V], time,
      prev[V],d[V], f[V]
DFS(G) // where prog starts
{
   for each vertex u ∈ V
   {
      color[u] = WHITE;
   prev[u]=NIL;
   f[u]=inf; d[u]=inf;
   }
   time = 0;
   for each vertex u ∈ V
     if (color[u] == WHITE)
         DFS_Visit(u);
}
```

```
DFS_Visit(u)
{
   color[u] = GREY;
   time = time+1;
   d[u] = time;
   for each v ∈ Adj[u]
   {
      if(color[v] == WHITE){
     prev[v]=u;
         DFS_Visit(v);
   }}
   color[u] = BLACK;
   time = time+1;
   f[u] = time;
}
```

Will all vertices eventually be colored black?

DFS Example

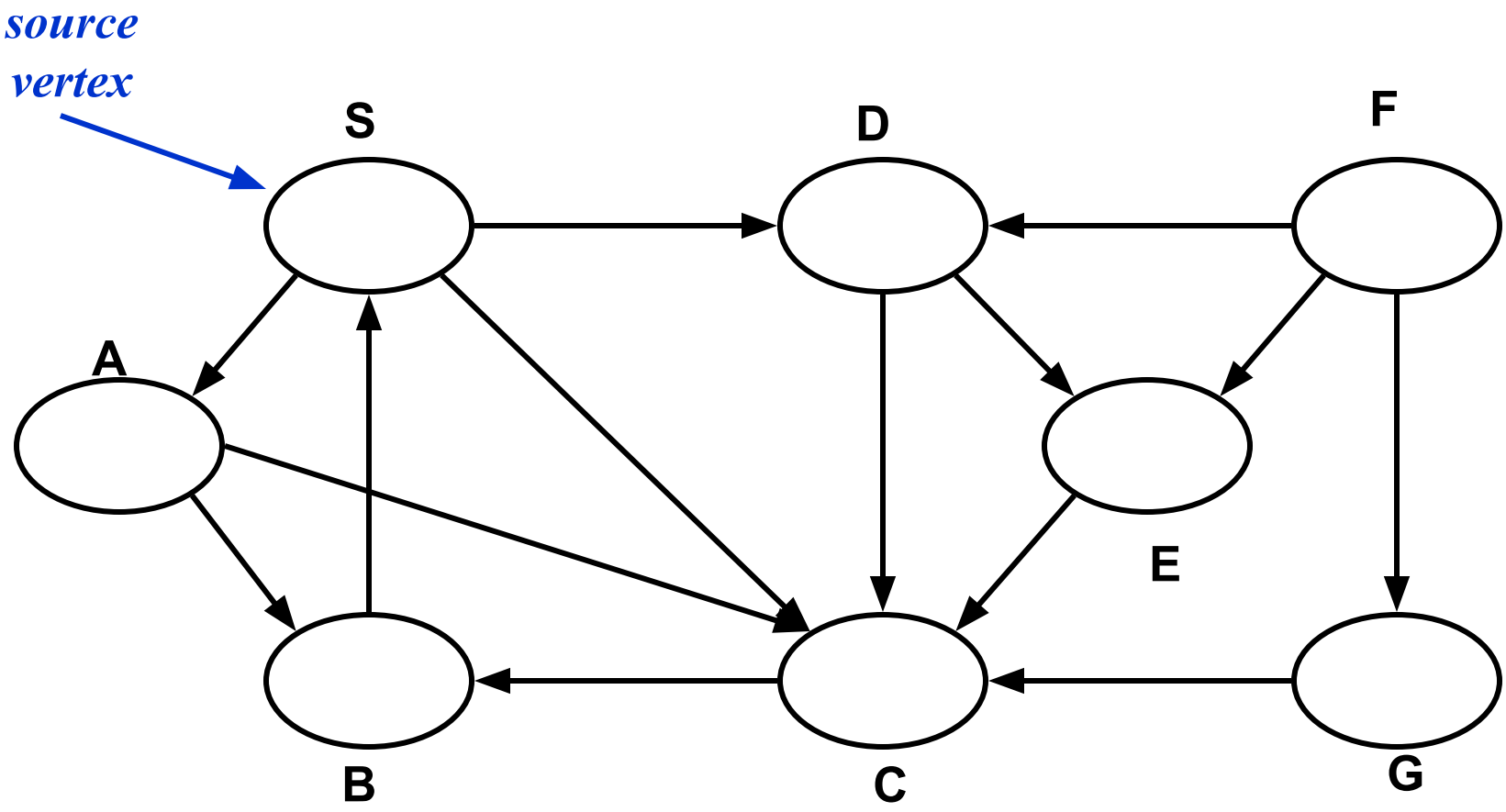

DFS Example

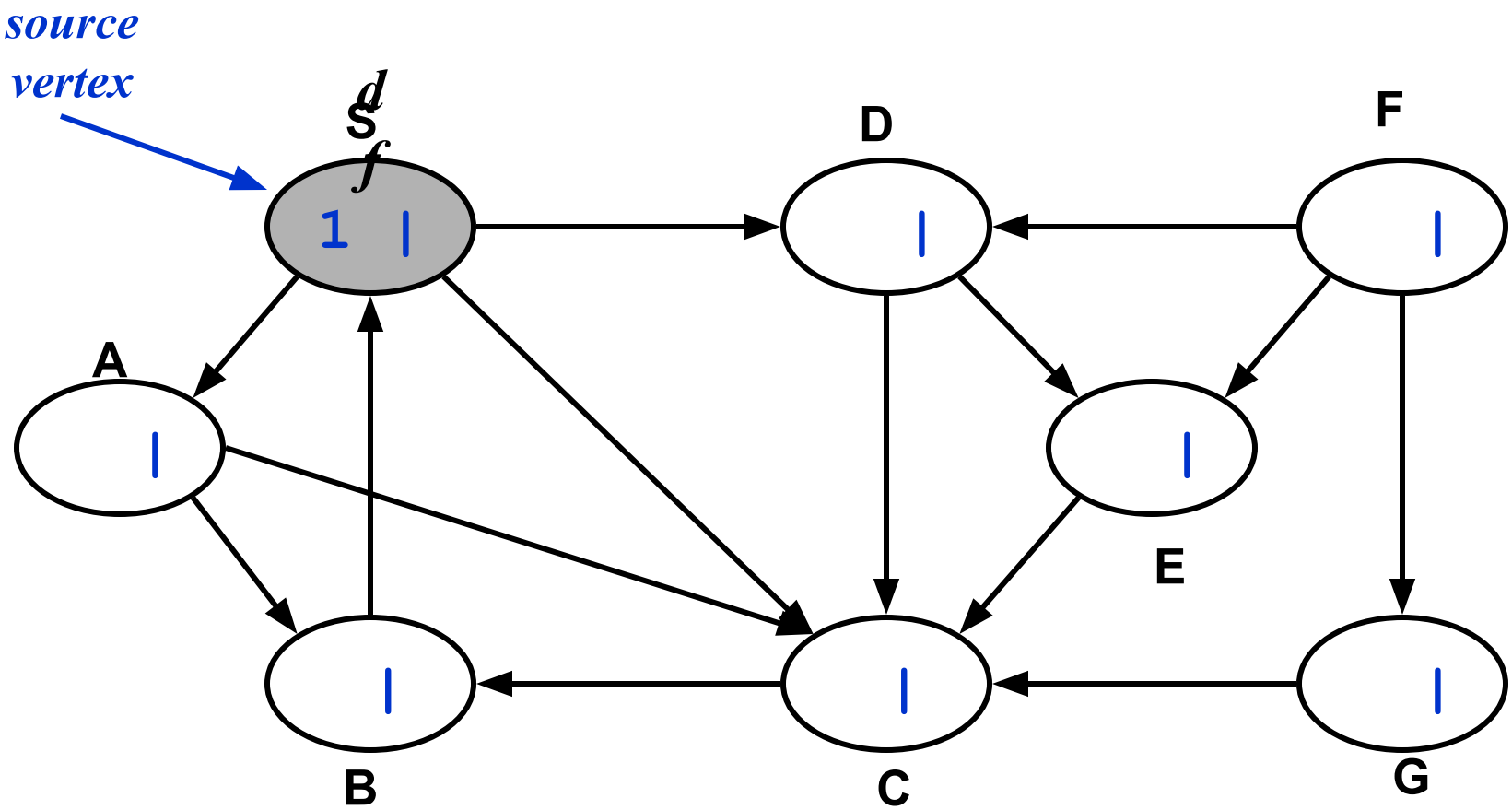

DFS Example

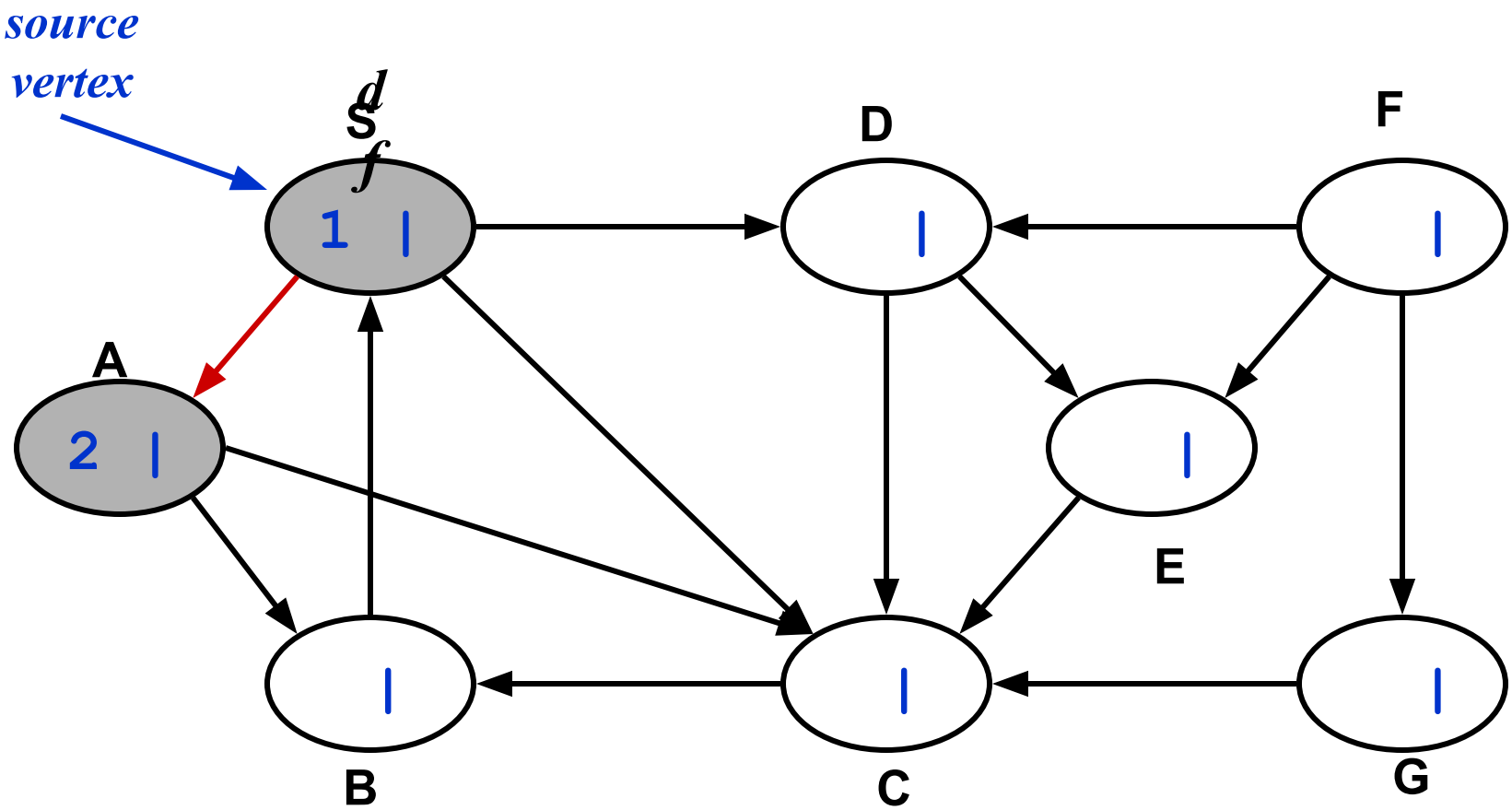

DFS Example

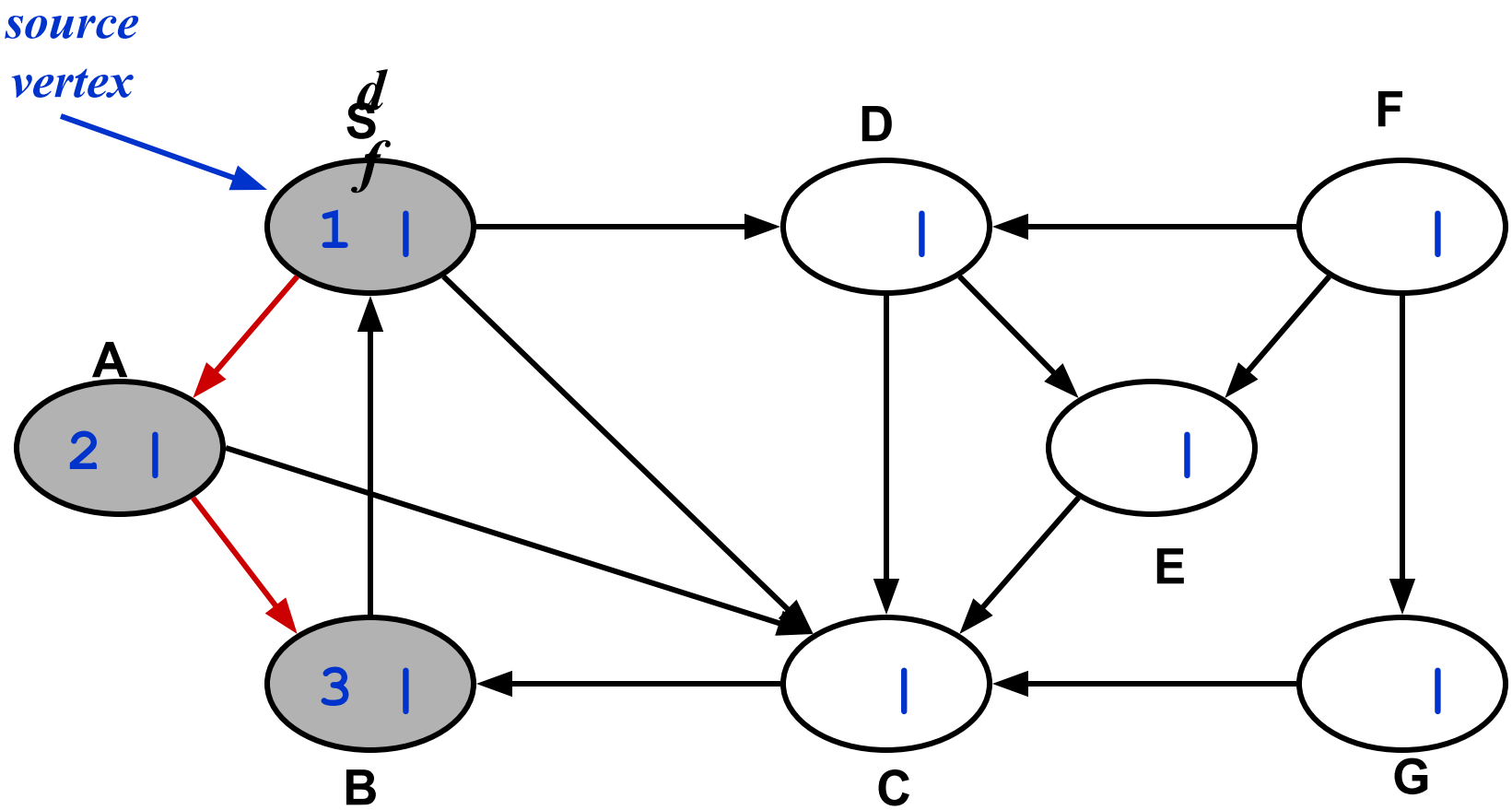

DFS Example

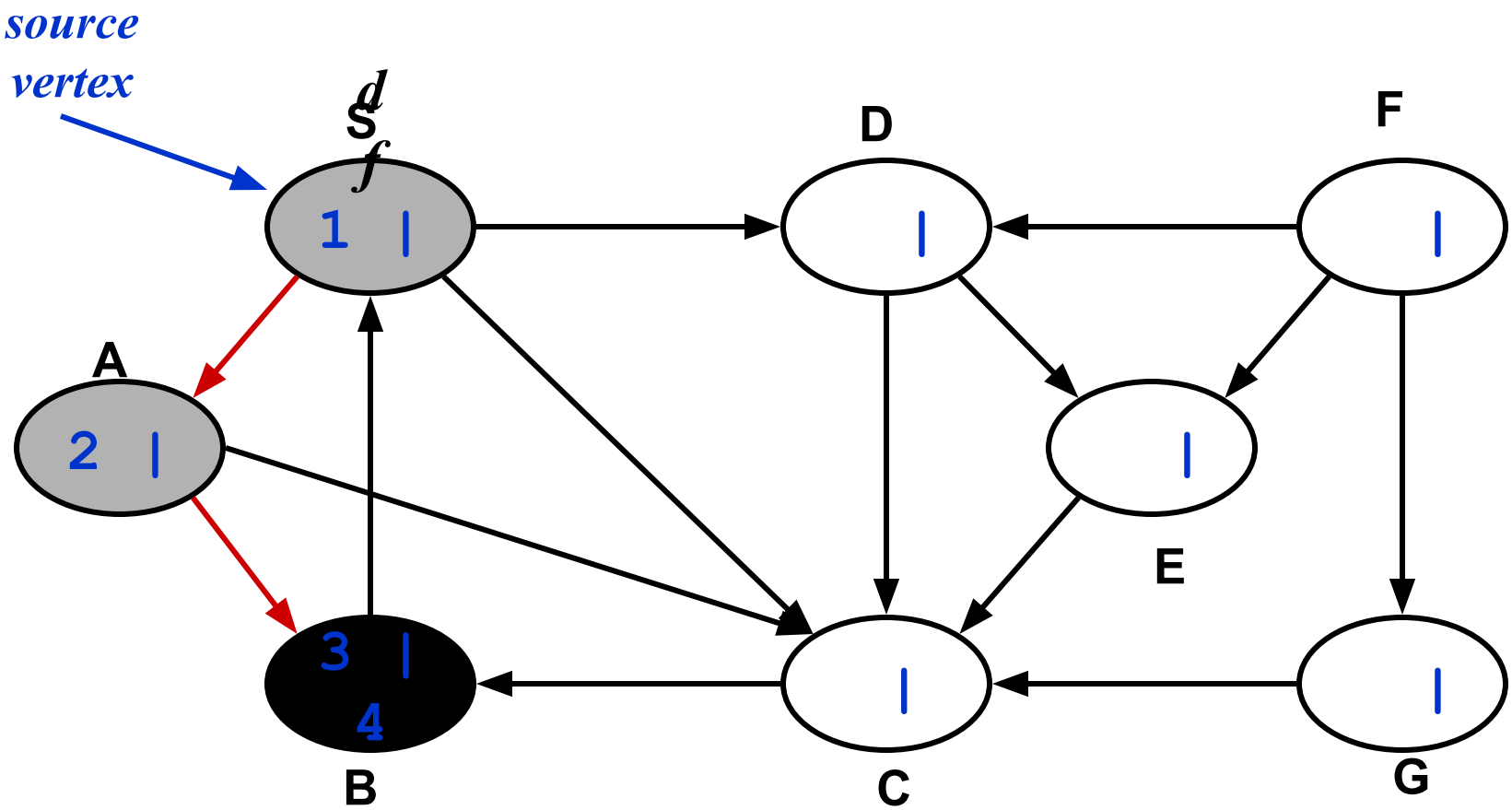

DFS Example

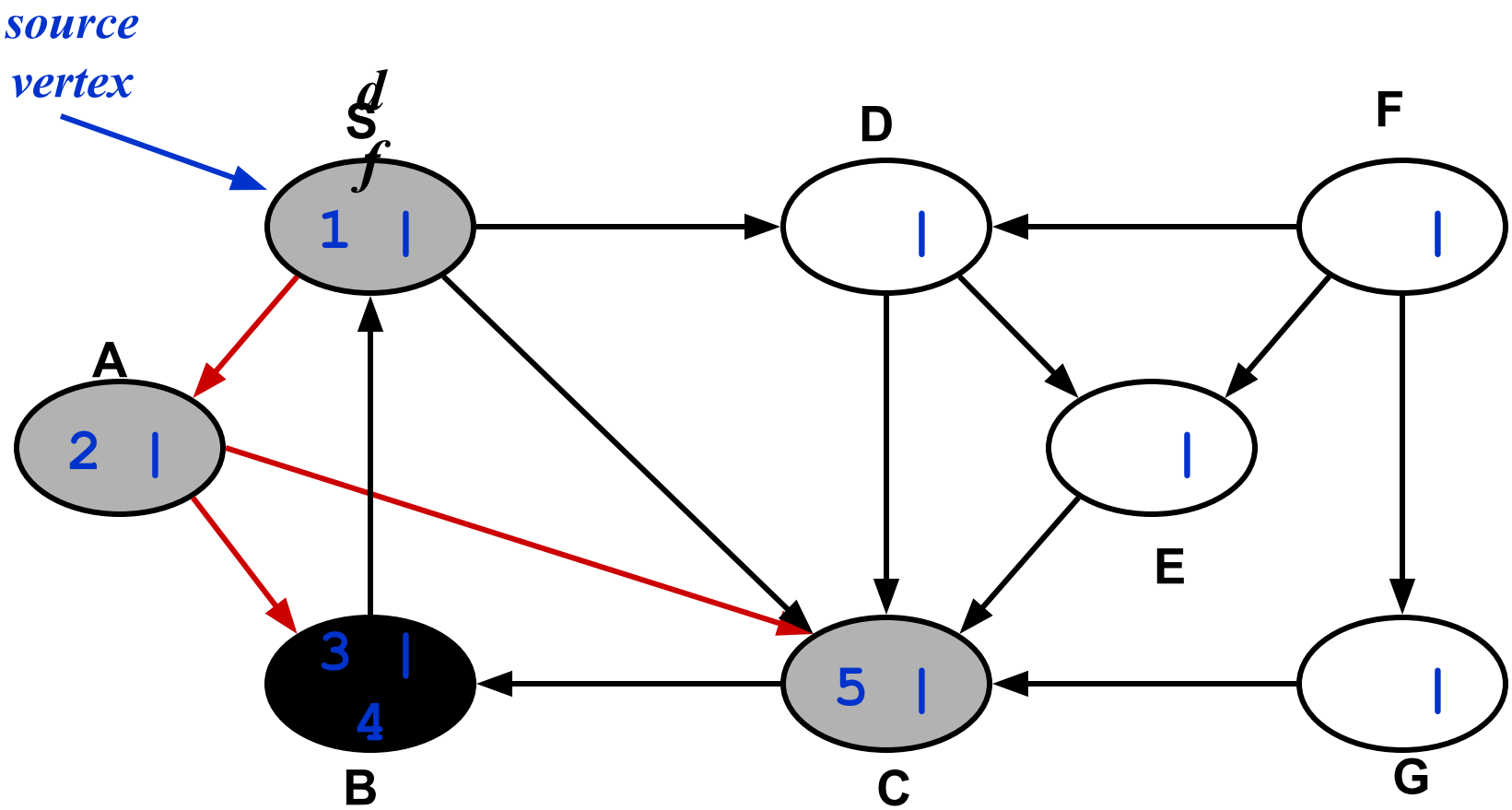

DFS Example

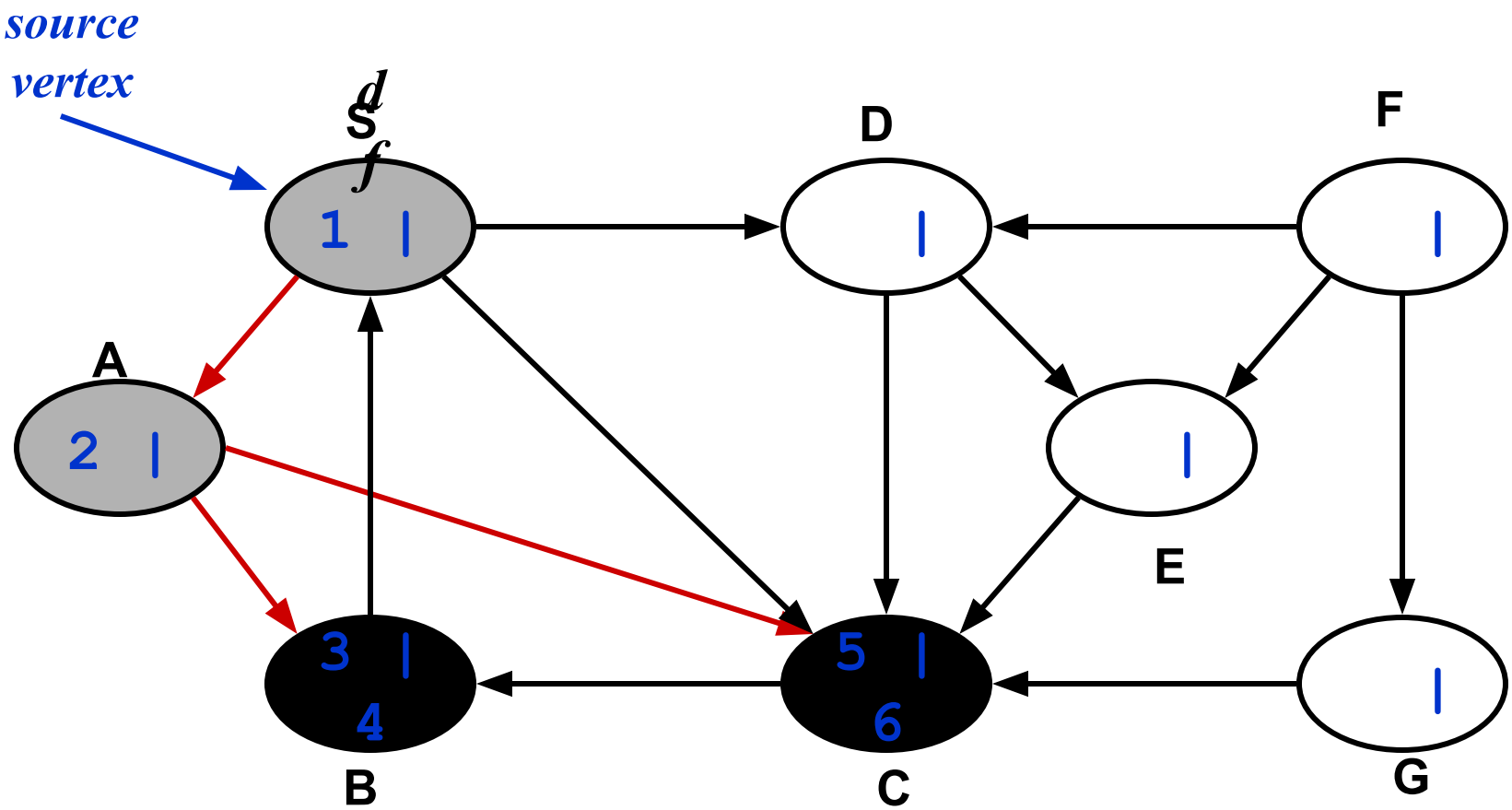

DFS Example

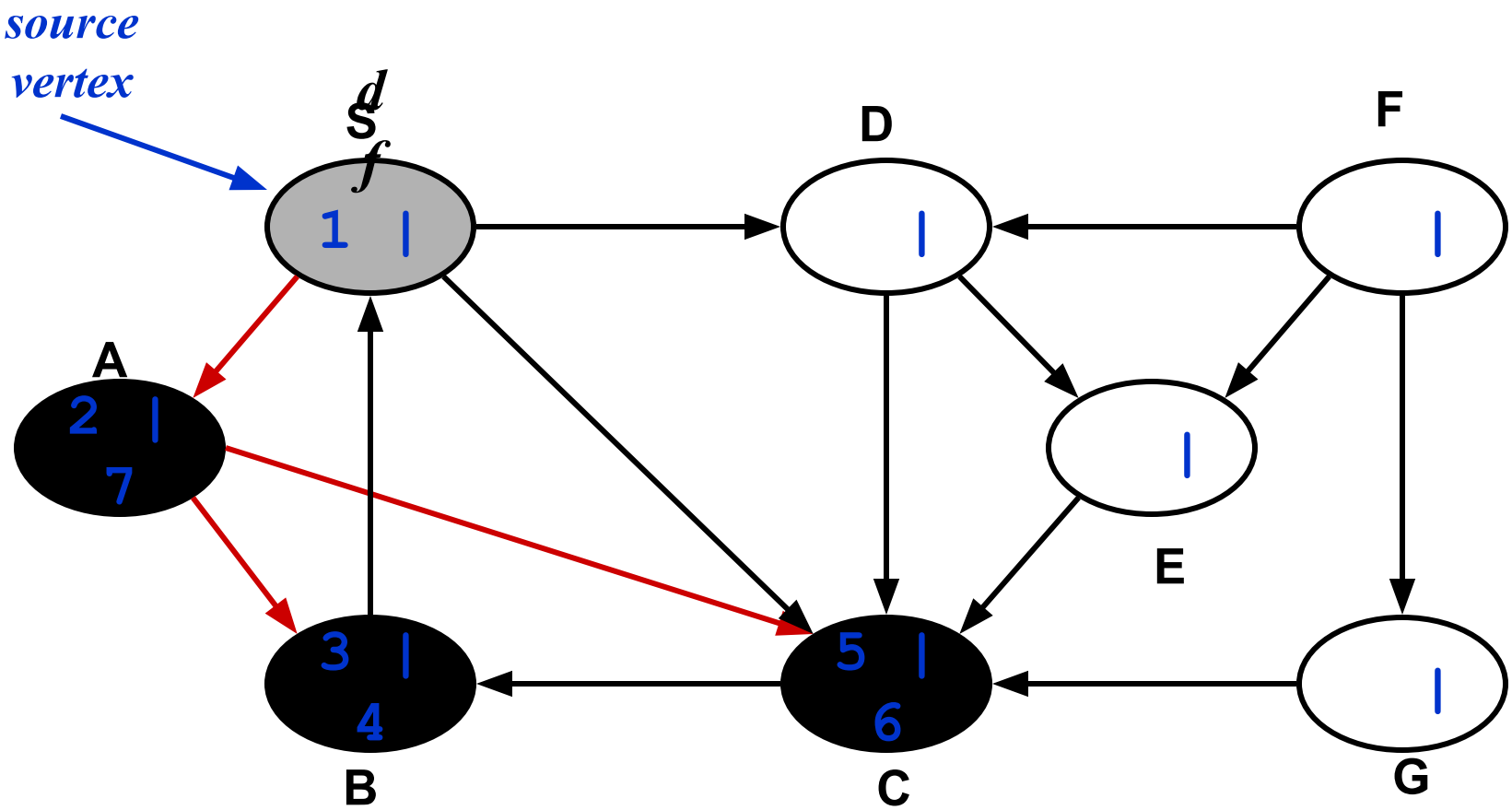

DFS Example

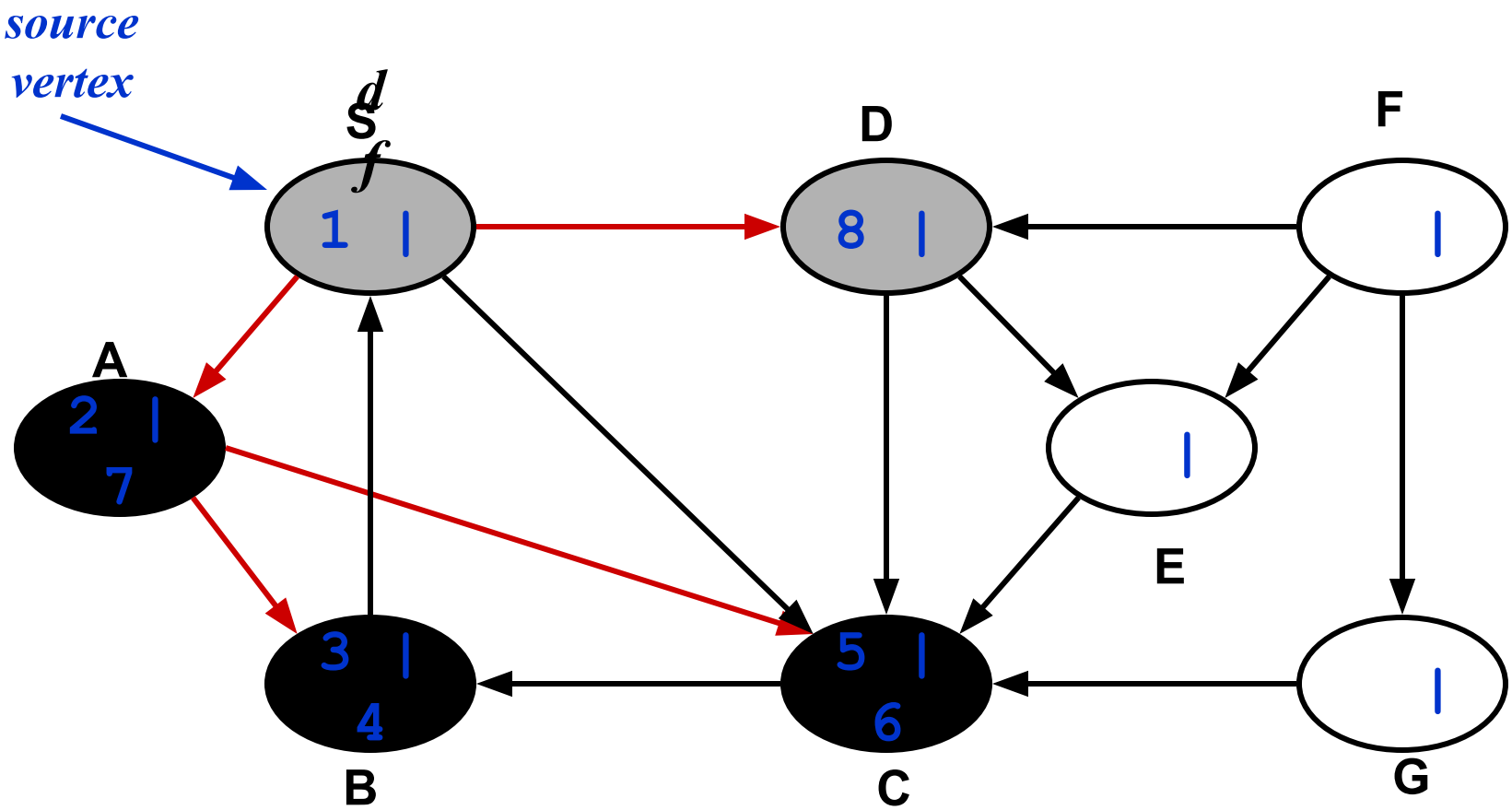

DFS Example

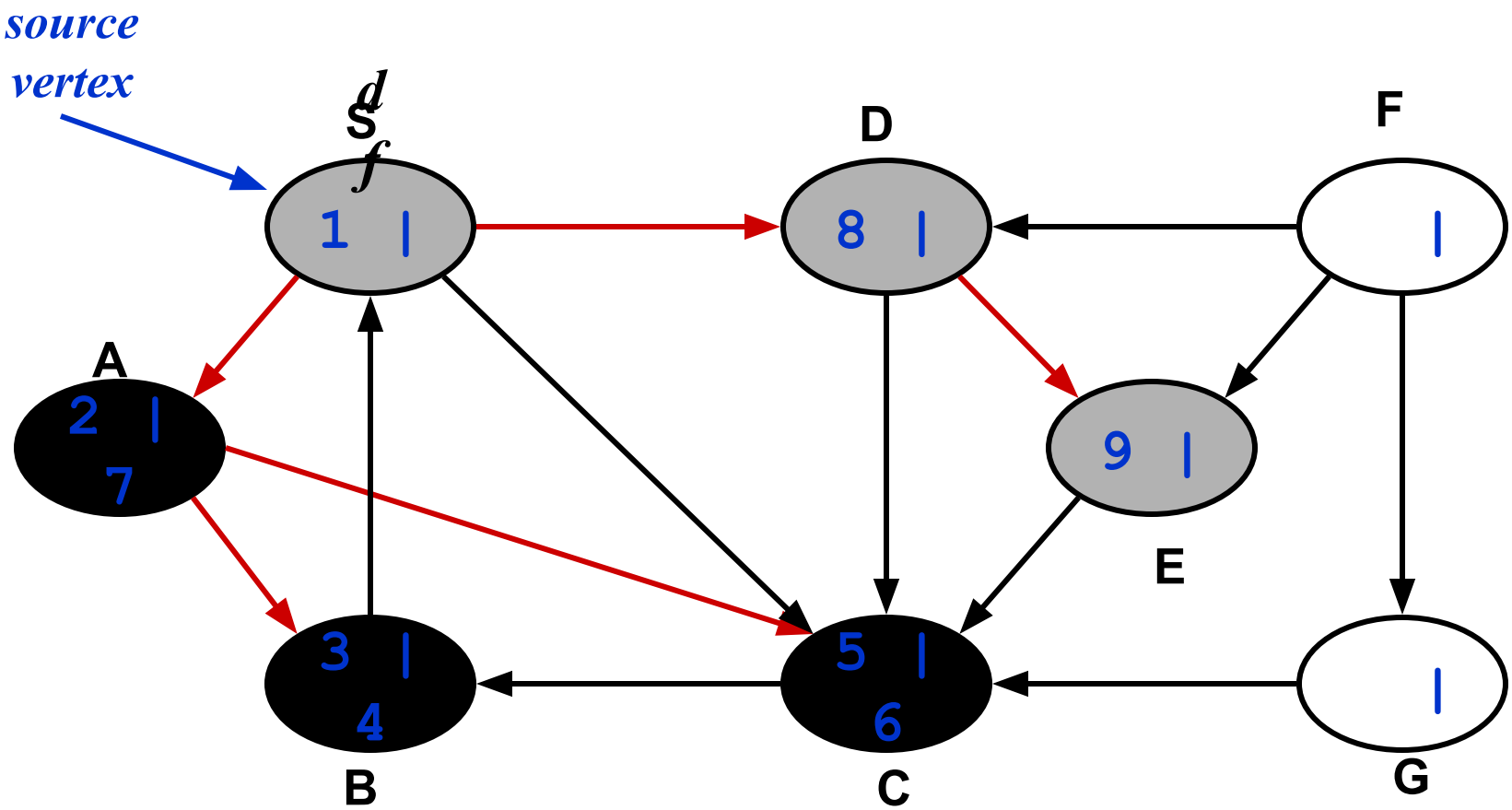

What is the structure of the grey vertices?
What do they represent?

DFS Example

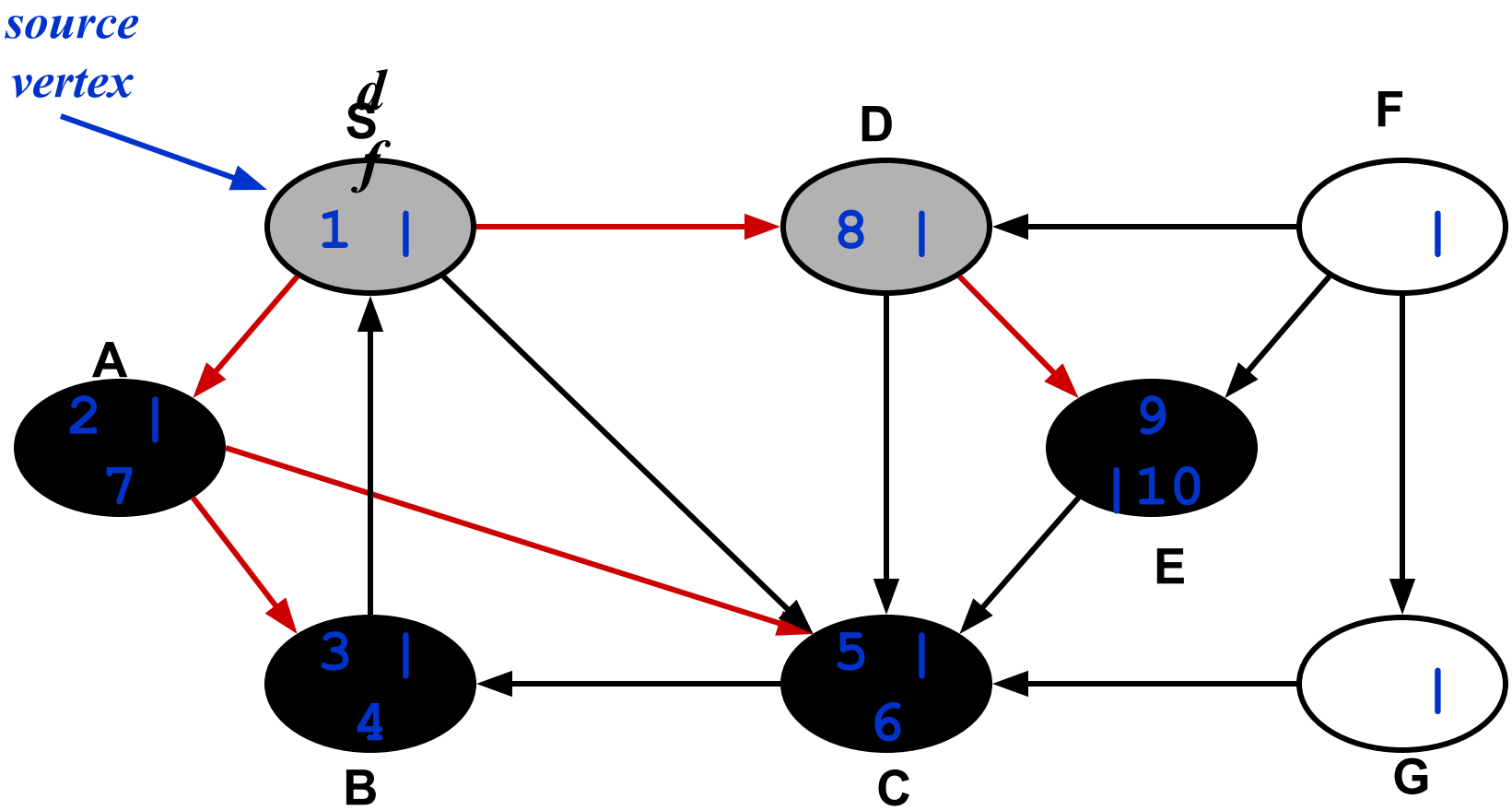

DFS Example

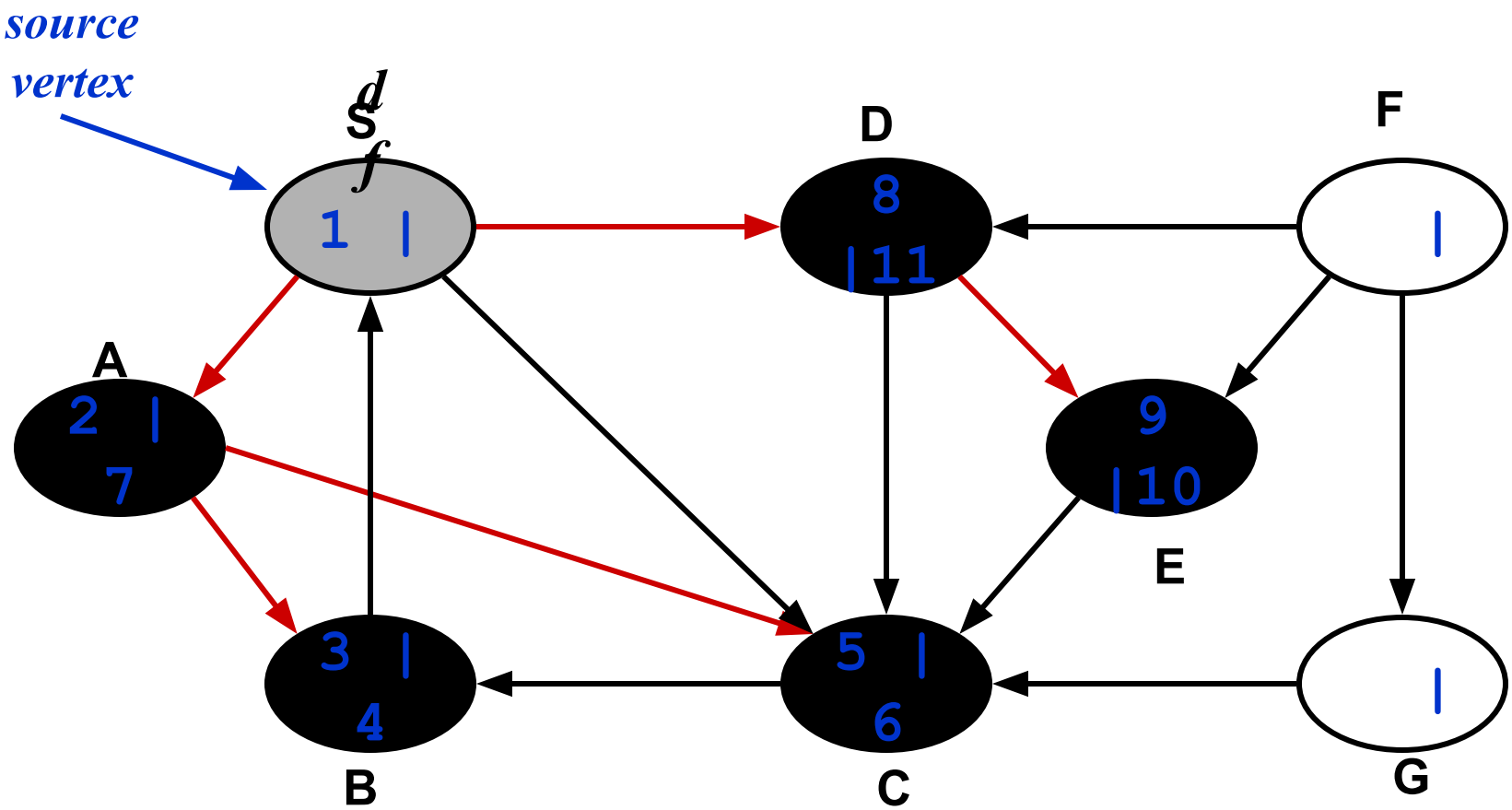

DFS Example

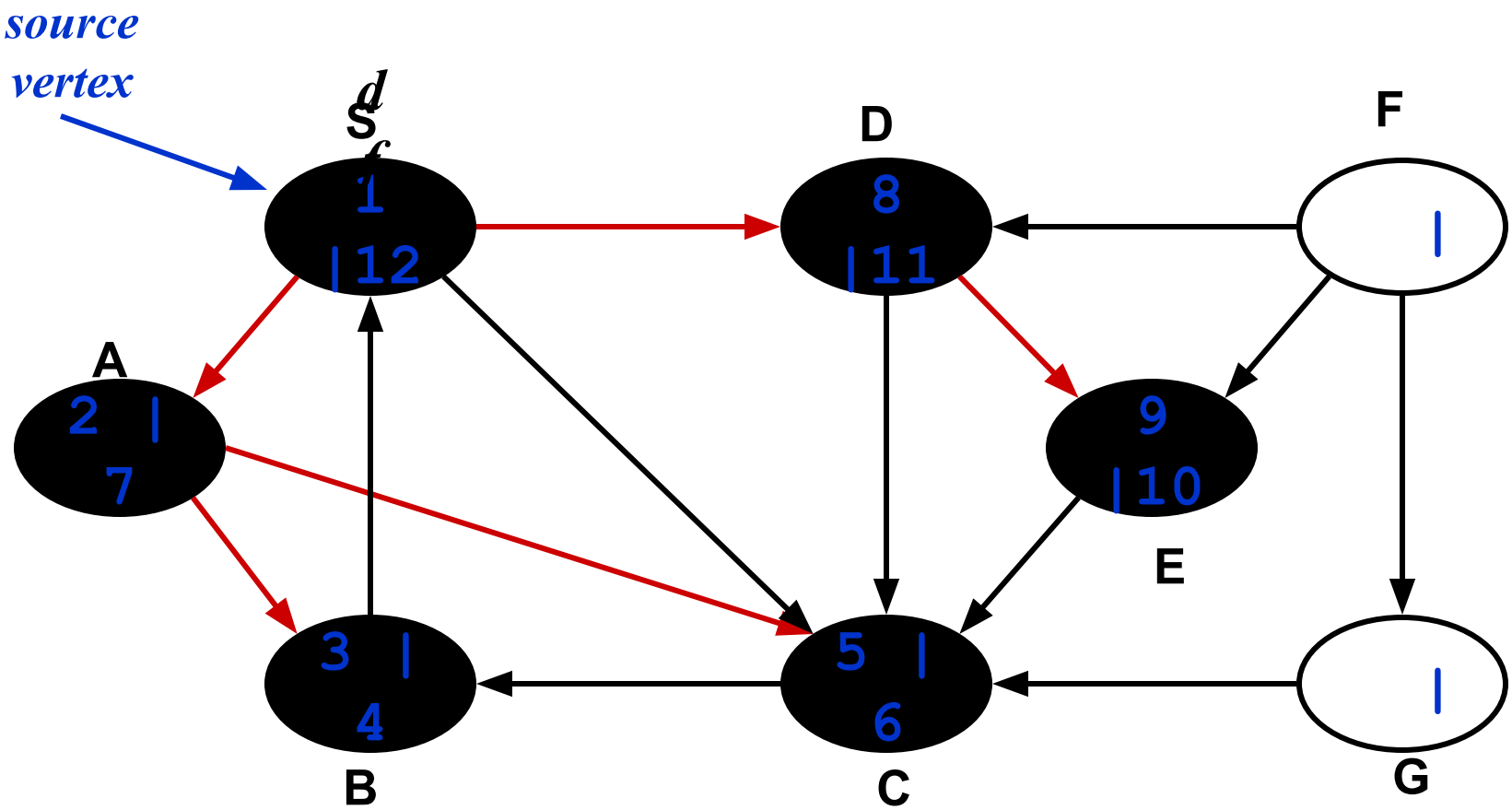

DFS Example

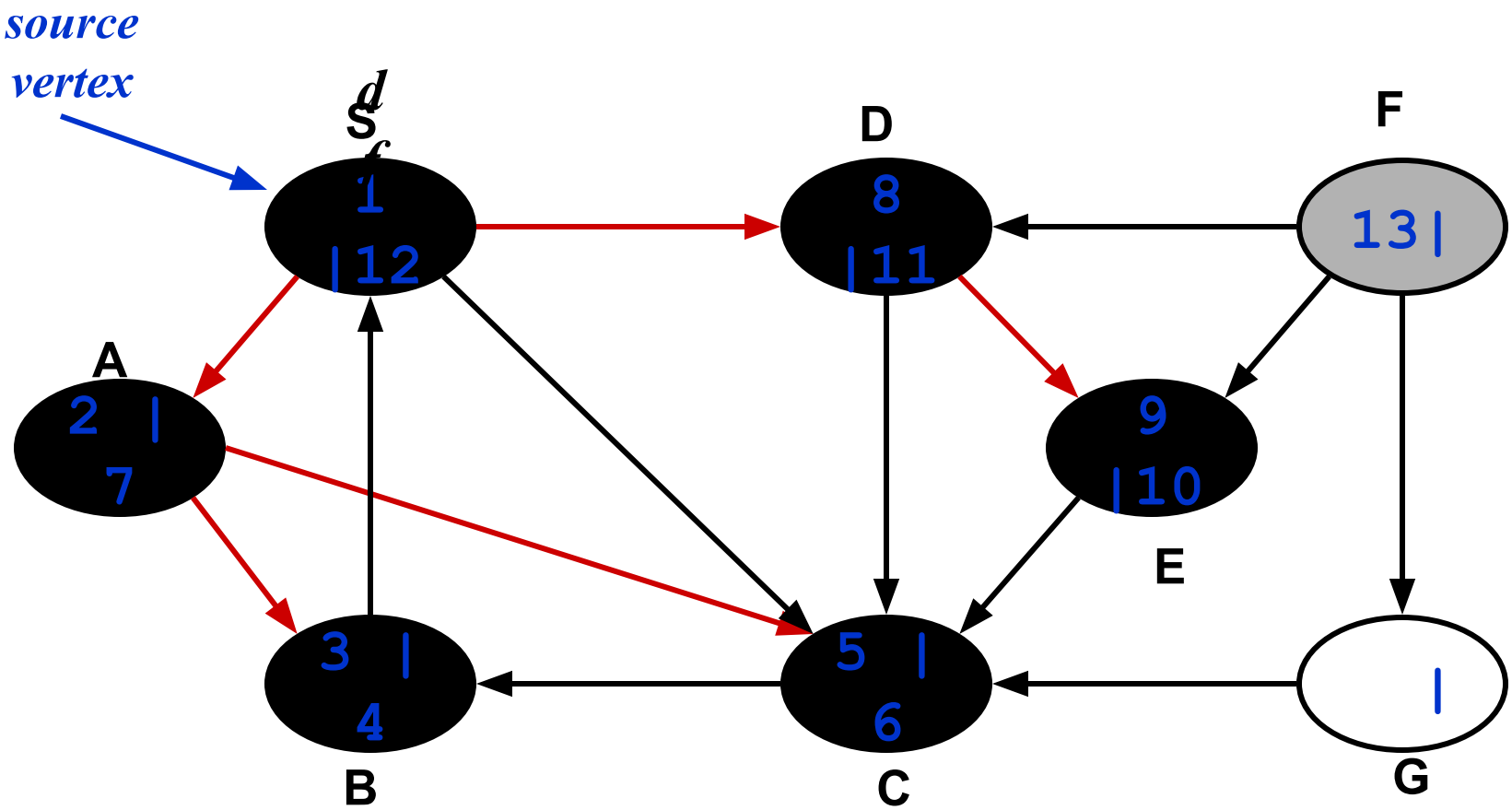

DFS Example

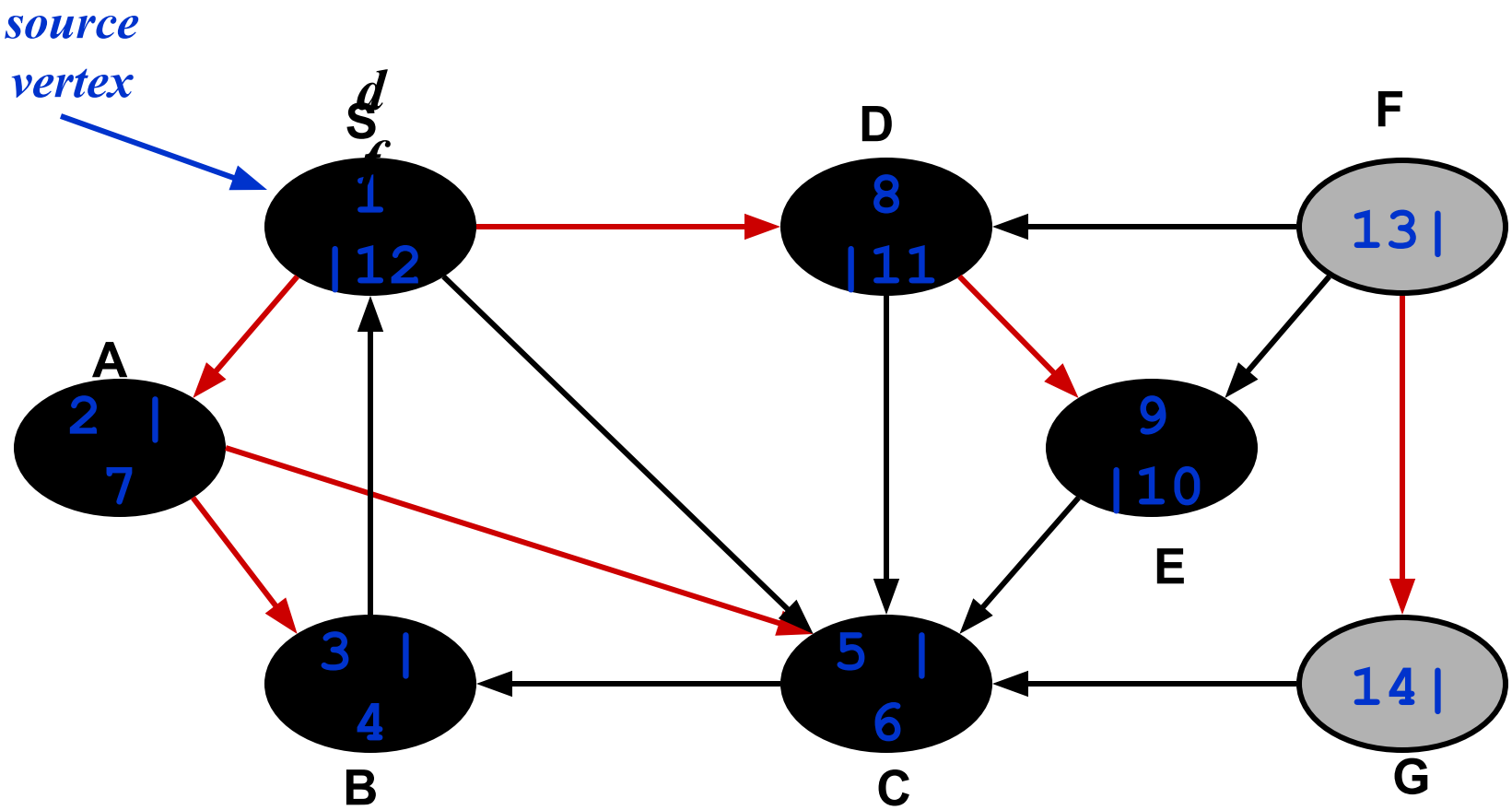

DFS Example

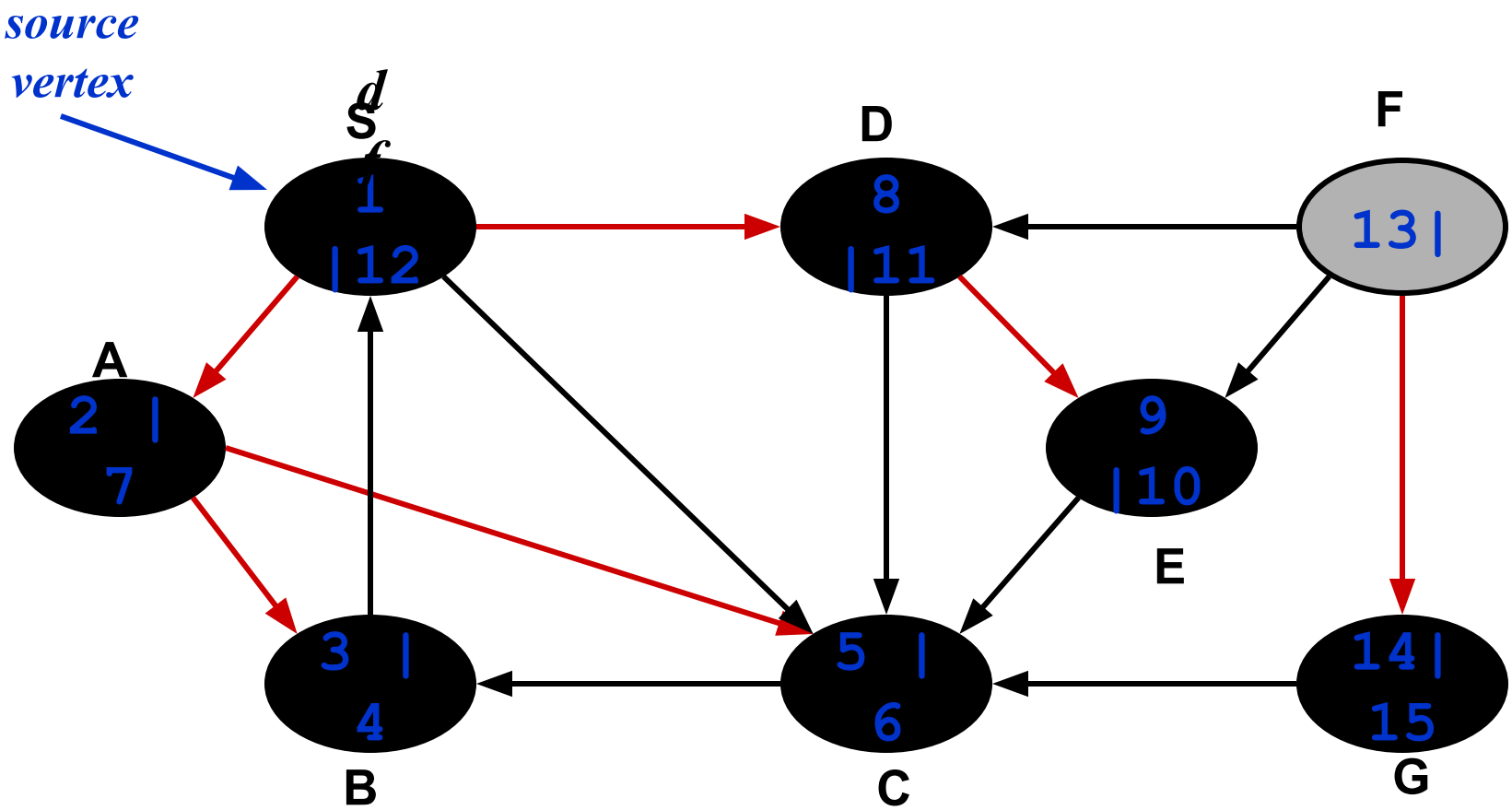

DFS Example

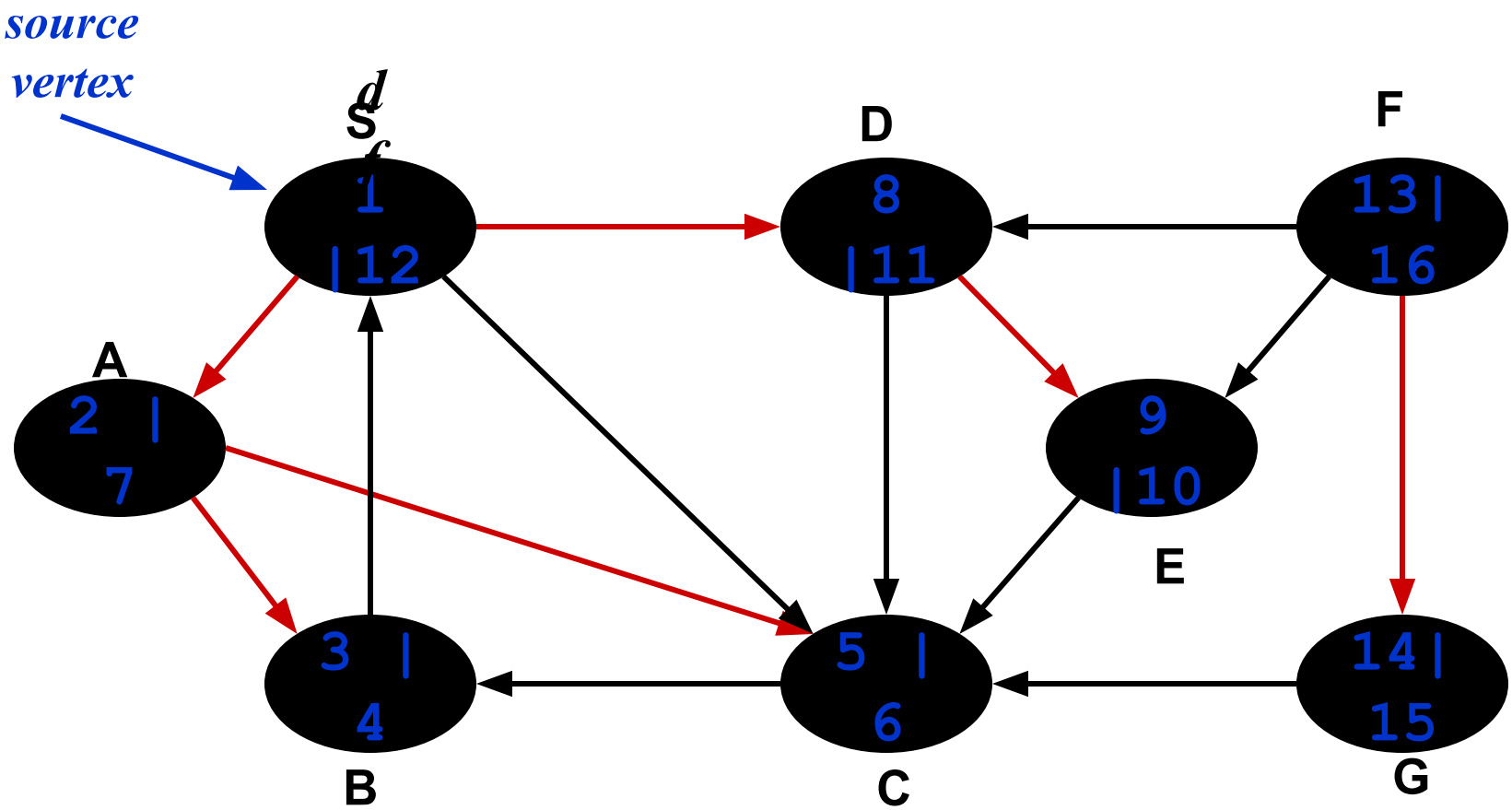

Depth-First Search: The Code

```
Data: color[V], time,
      prev[V],d[V], f[V]
DFS(G) // where prog starts
{
   for each vertex u ∈ V
   {
      color[u] = WHITE;
   prev[u]=NIL;
   f[u]=inf; d[u]=inf;
   }
   time = 0;
   for each vertex u ∈ V
     if (color[u] == WHITE)
         DFS_Visit(u);
}
```

```
DFS_Visit(u)
{
   color[u] = GREY;
   time = time+1;
   d[u] = time;
   for each v ∈ Adj[u]
   {
      if (color[v] == WHITE)
     prev[v]=u;
         DFS_Visit(v);
   }
   color[u] = BLACK;
   time = time+1;
   f[u] = time;
}
```

What will be the running time?

Depth-First Search: The Code

```
Data: color[V], time,
      prev[V],d[V], f[V]
DFS(G) // where prog starts
{
    for each vertex u ∈ V
    {
        color[u] = WHITE;
    prev[u]=NIL;
    f[u]=inf; d[u]=inf;
    }
    time = 0;
    for each vertex u ∈ V
      if (color[u] == WHITE)
          DFS_Visit(u);
}
```

O(V)

O(V)

```
DFS_Visit(u)
{
    color[u] = GREY;
    time = time+1;
    d[u] = time;
    for each v ∈ Adj[u]
    {
        if (color[v] == WHITE)
      prev[v]=u;
          DFS_Visit(v);
    }
    color[u] = BLACK;
    time = time+1;
    f[u] = time;
}
```

O(V)

Running time: $O(V^2)$ because call DFS_Visit on each vertex, and the loop over Adj[] can run as many as |V| times

Depth-First Search: The Code

```
Data: color[V], time,
      prev[V],d[V], f[V]
DFS(G) // where prog starts
{
   for each vertex u ∈ V
   {
      color[u] = WHITE;
   prev[u]=NIL;
   f[u]=inf; d[u]=inf;
   }
   time = 0;
   for each vertex u ∈ V
     if (color[u] == WHITE)
         DFS_Visit(u);
}
```

```
DFS_Visit(u)
{
   color[u] = GREY;
   time = time+1;
   d[u] = time;
   for each v ∈ Adj[u]
   {
      if (color[v] == WHITE)
     prev[v]=u;
         DFS_Visit(v);
   }
   color[u] = BLACK;
   time = time+1;
   f[u] = time;
}
```

BUT, there is actually a tighter bound.

How many times will DFS_Visit() actually be called?

Depth-First Search: The Code

```
Data: color[V], time,
      prev[V],d[V], f[V]
DFS(G) // where prog starts
{
   for each vertex u ∈ V
   {
      color[u] = WHITE;
   prev[u]=NIL;
   f[u]=inf; d[u]=inf;
   }
   time = 0;
   for each vertex u ∈ V
     if (color[u] == WHITE)
         DFS_Visit(u);
}
```

```
DFS_Visit(u)
{
   color[u] = GREY;
   time = time+1;
   d[u] = time;
   for each v ∈ Adj[u]
   {
      if (color[v] == WHITE)
     prev[v]=u;
         DFS_Visit(v);
   }
   color[u] = BLACK;
   time = time+1;
   f[u] = time;
}
```

So, running time of DFS = O(V+E)

Depth-First Sort Analysis

- This running time argument is an informal example of *amortized analysis*
  - "Charge" the exploration of edge to the edge:
    - Each loop in DFS_Visit can be attributed to an edge in the graph
    - Runs once per edge if directed graph, twice if undirected
    - Thus loop will run in O(E) time, algorithm O(V+E)
      - Considered linear for graph, b/c adj list requires O(V+E) storage
  - Important to be comfortable with this kind of reasoning and analysis

DFS: Kinds of edges

- DFS introduces an important distinction among edges in the original graph:
  - *Tree edge*: encounter new (white) vertex
    - The tree edges form a spanning forest
    - *Can tree edges form cycles? Why or why not?*
      - *No*

DFS Example

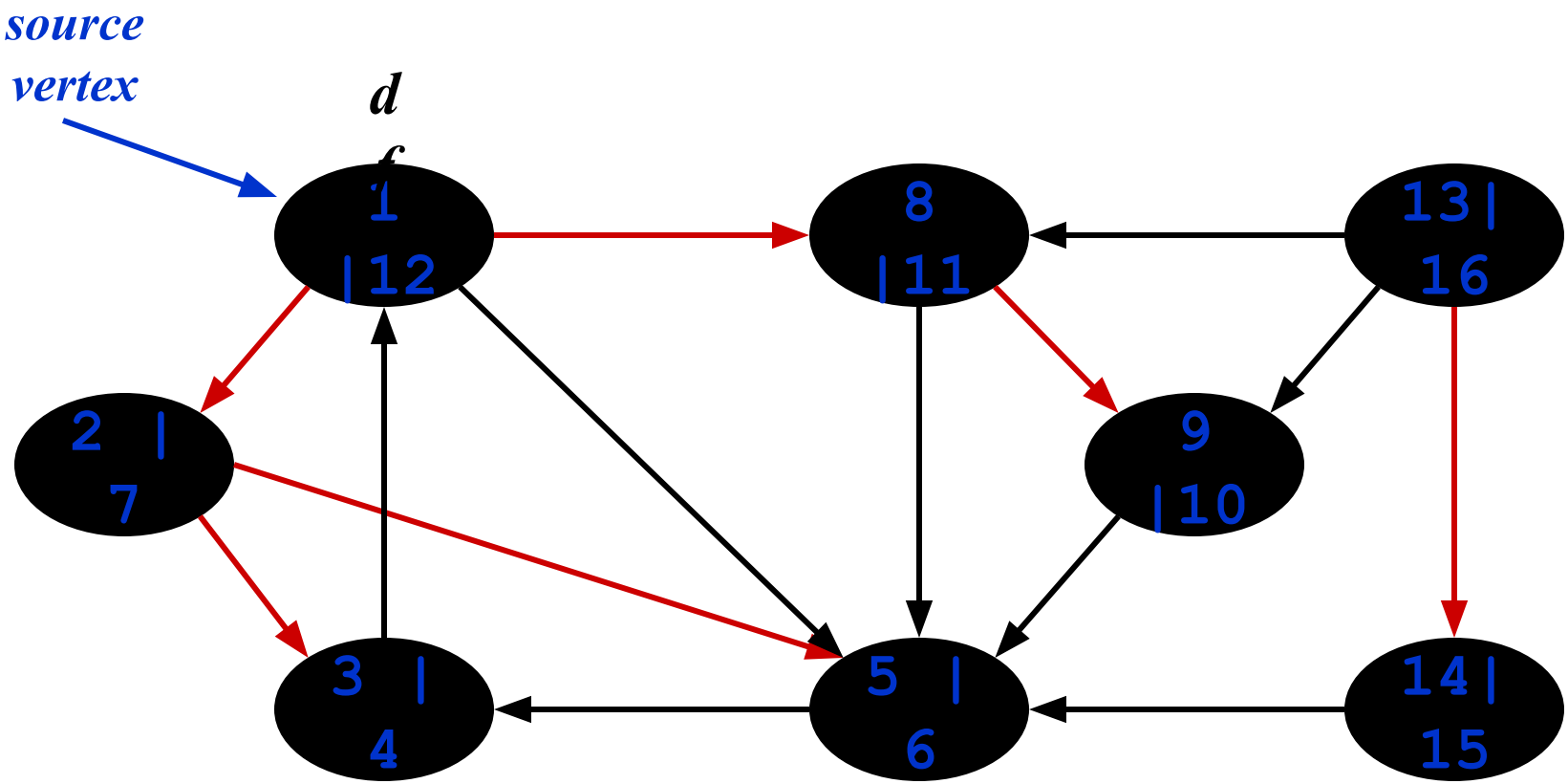

Tree edges

DFS: Kinds of edges

- DFS introduces an important distinction among edges in the original graph:
  - *Tree edge*: encounter new (white) vertex
  - *Back edge*: from descendent to ancestor
    - Encounter a grey vertex (grey to grey)
    - Self loops are considered as to be back edge.

DFS Example

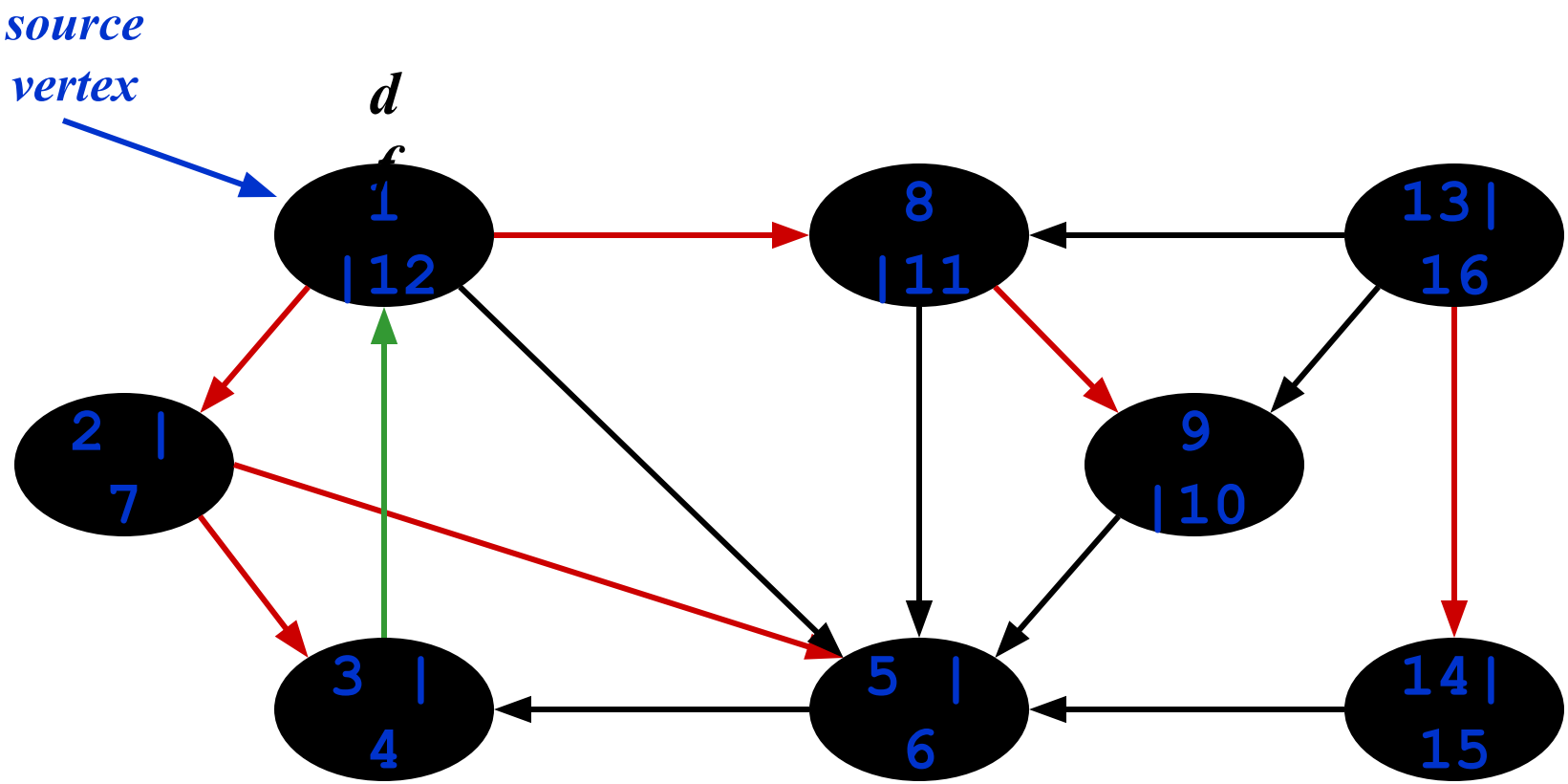

Tree edges *Back edges*

DFS: Kinds of edges

- DFS introduces an important distinction among edges in the original graph:
  - *Tree edge*: encounter new (white) vertex
  - *Back edge*: from descendent to ancestor
  - *Forward edge*: from ancestor to descendent
    - Not a tree edge, though
    - From grey node to black node

DFS Example

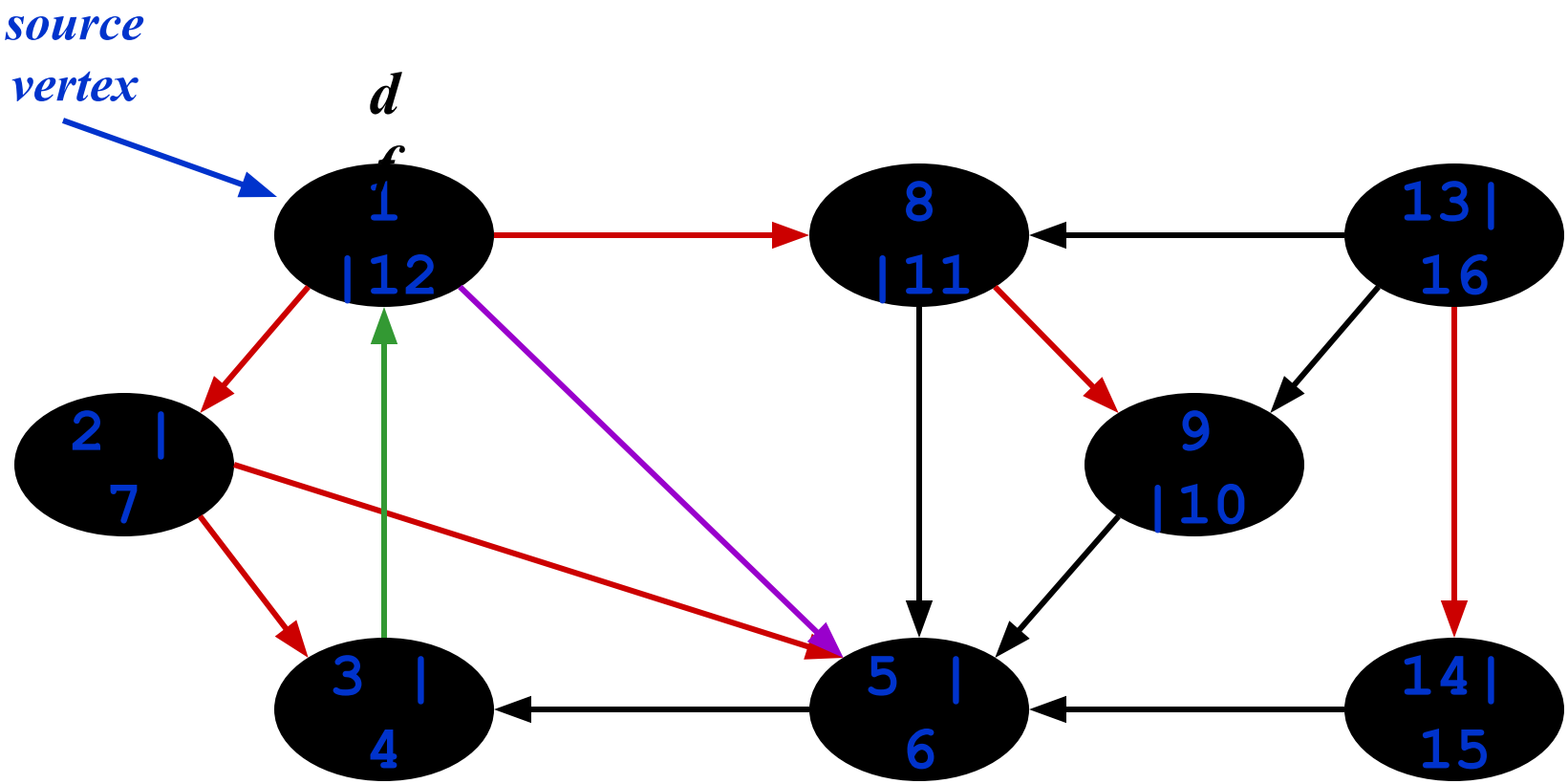

Tree edges *Back edges* *Forward edges*

DFS: Kinds of edges

- DFS introduces an important distinction among edges in the original graph:
  - *Tree edge*: encounter new (white) vertex
  - *Back edge*: from descendent to ancestor
  - *Forward edge*: from ancestor to descendent
  - *Cross edge*: between a tree or subtrees
    - From a grey node to a black node

DFS Example

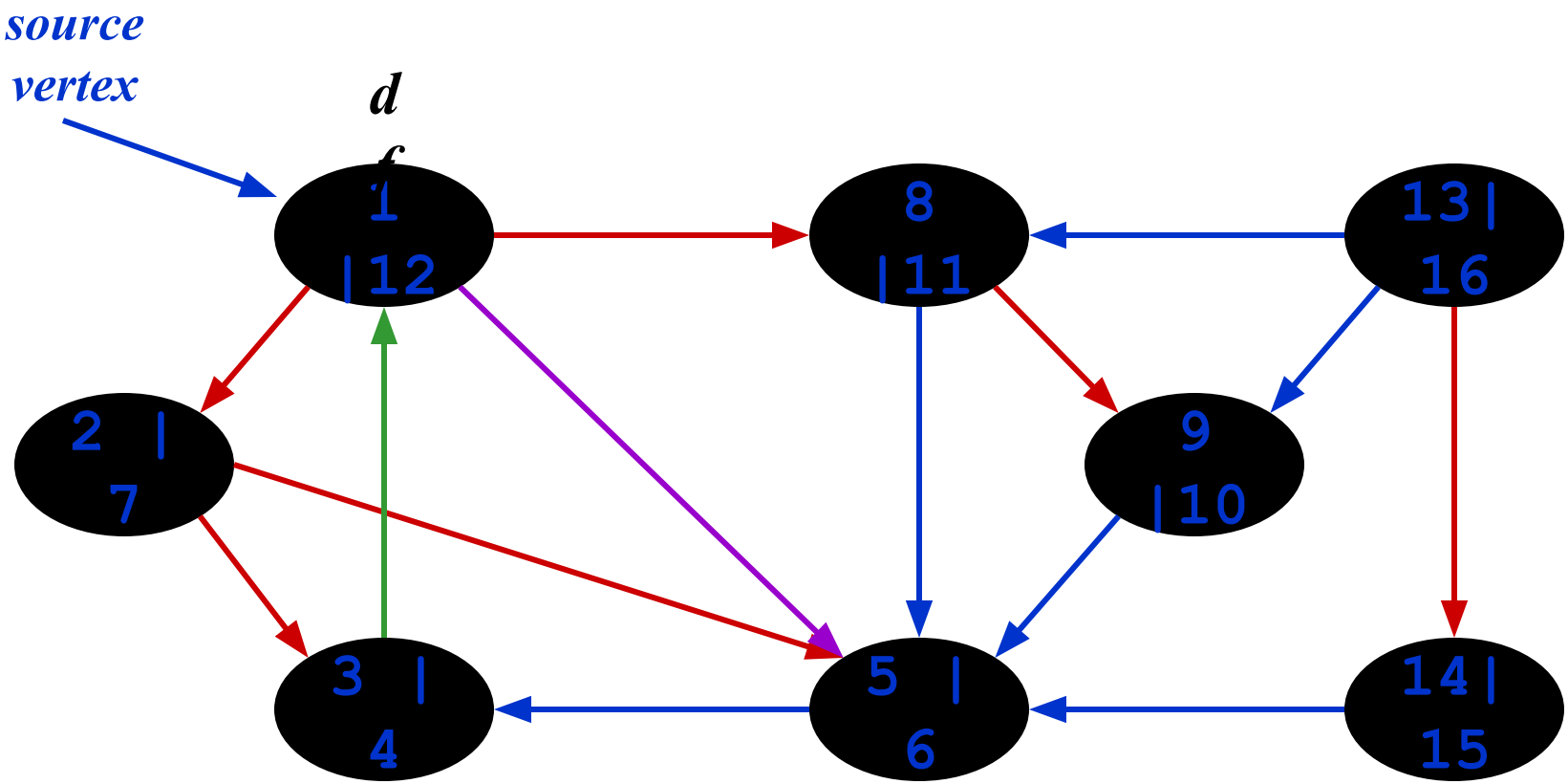

Tree edges *Back edges* *Forward edges* *Cross edges*

DFS: Kinds of edges

- DFS introduces an important distinction among edges in the original graph:
  - *Tree edge*: encounter new (white) vertex
  - *Back edge*: from descendent to ancestor
  - *Forward edge*: from ancestor to descendent
  - *Cross edge*: between a tree or subtrees
- Note: tree & back edges are important; most algorithms don't distinguish forward & cross

More about the edges

- Let (u,v) is an edge.
  - If (color[v] = WHITE) then (u,v) is a tree edge
  - If (color[v] = GRAY) then (u,v) is a back edge
  - If (color[v] = BLACK) then (u,v) is a forward/cross edge
    - Forward Edge: d[u]<d[v]
    - Cross Edge: d[u]>d[v]

Depth-First Search - Timestamps

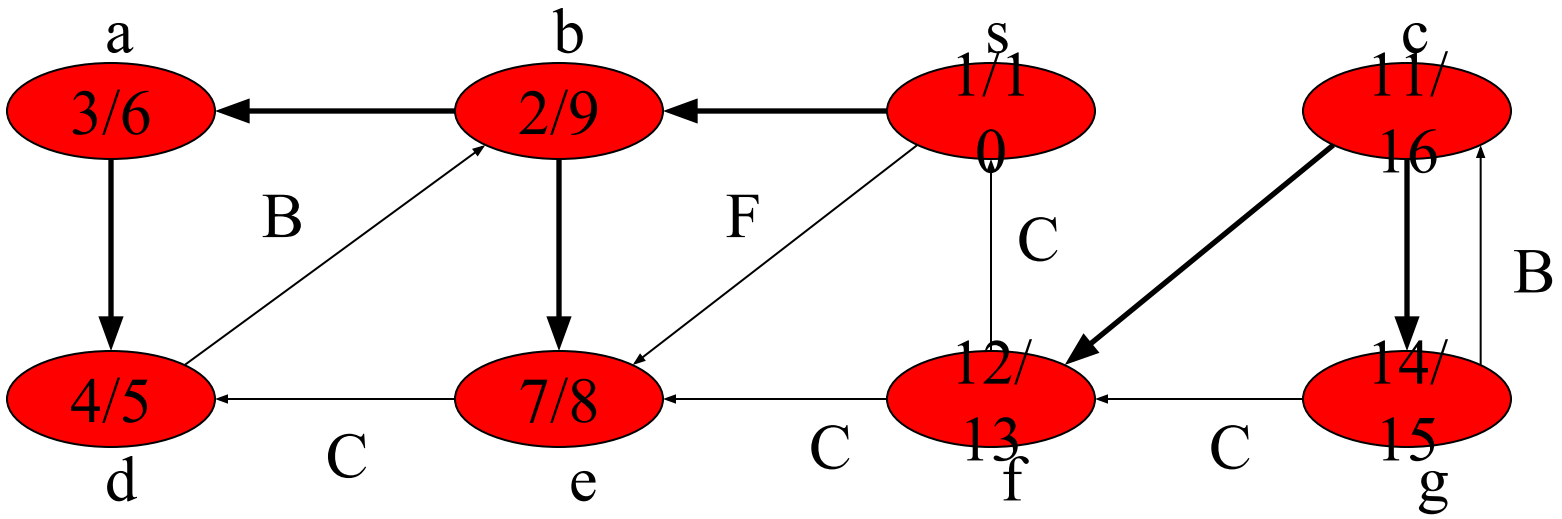

Depth-First Search - Timestamps

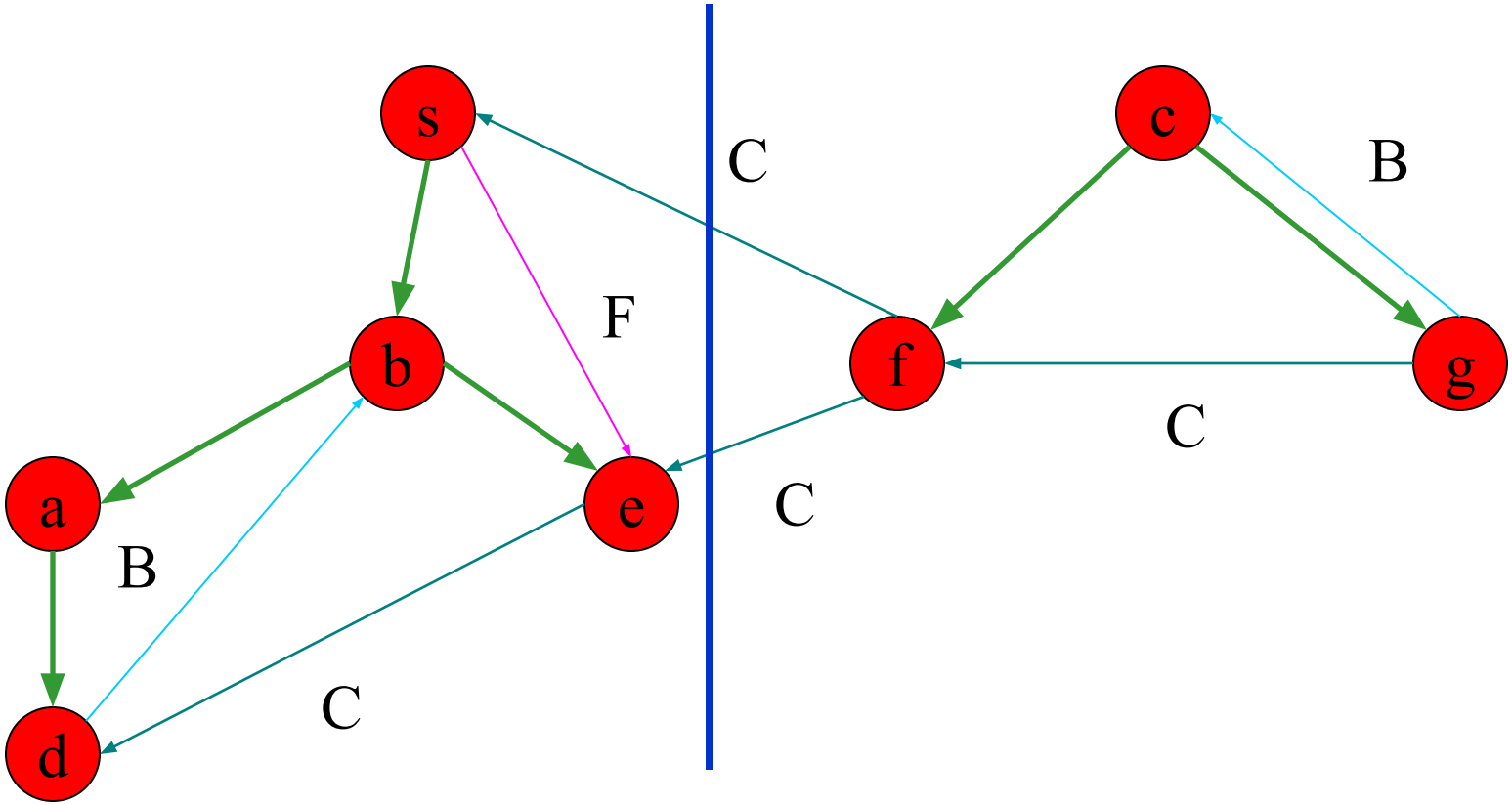

Depth-First Search: Detect Edge

```
Data: color[V], time,
      prev[V],d[V], f[V]
DFS(G) // where prog starts
{
   for each vertex u ∈ V
   {
      color[u] = WHITE;
   prev[u]=NIL;
   f[u]=inf; d[u]=inf;
   }
   time = 0;
   for each vertex u ∈ V
     if (color[u] == WHITE)
         DFS_Visit(u);
}
```

```
DFS_Visit(u)
{
   color[u] = GREY;
   time = time+1;
   d[u] = time;
   for each v ∈ Adj[u]
   {
   detect edge type using
   "color[v]"
      if(color[v] == WHITE){
     prev[v]=u;
         DFS_Visit(v);
   }}
   color[u] = BLACK;
   time = time+1;
   f[u] = time;
}
```

DFS: Kinds Of Edges

- Thm 22.10: If G is undirected, a DFS produces only tree and back edges
- Proof by contradiction:
  - Assume there's a forward edge
    - But F? edge must actually be a back edge (*why?*)

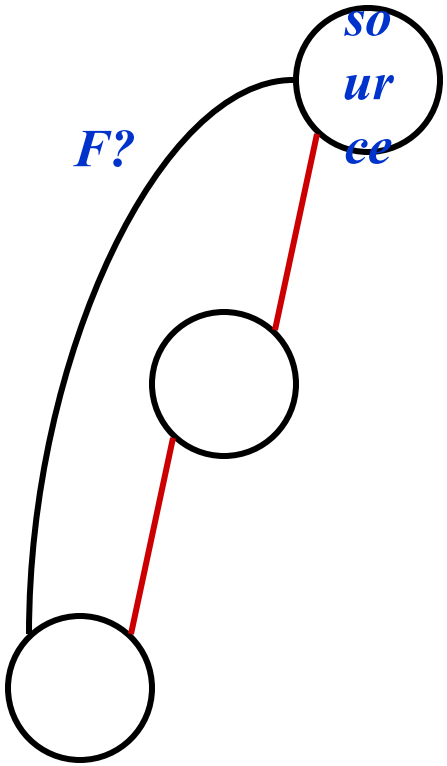

DFS: Kinds Of Edges

- Thm 23.9: If G is undirected, a DFS produces only tree and back edges
- Proof by contradiction:
  - Assume there's a cross edge
    - But C? edge cannot be cross:
    - must be explored from one of the vertices it connects, becoming a tree vertex, before other vertex is explored
    - So in fact the picture is wrong…both lower tree edges cannot in fact be tree edges

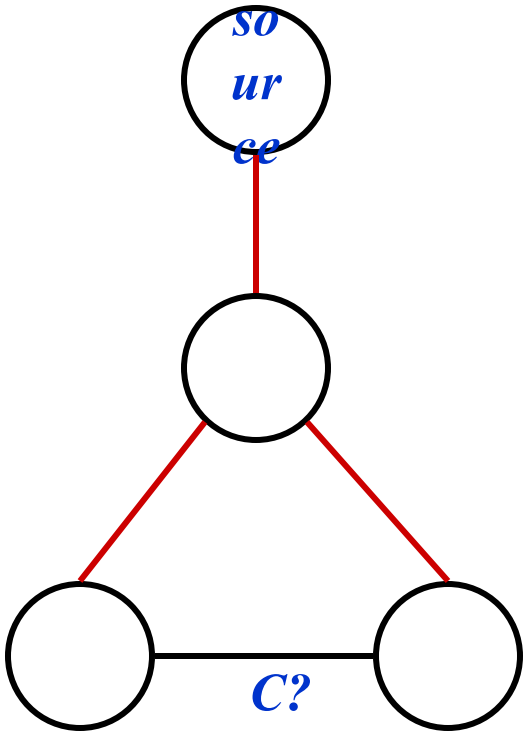

DFS And Graph Cycles

- Thm: An undirected graph is *acyclic* iff a DFS yields no back edges
  - If acyclic, no back edges (because a back edge implies a cycle
  - If no back edges, acyclic
    - No back edges implies only tree edges (*Why?*)
    - Only tree edges implies we have a tree or a forest
    - Which by definition is acyclic
- Thus, can run DFS to find whether a graph has a cycle

DFS And Cycles

How would you modify the code to detect cycles?

```
Data: color[V], time,
      prev[V],d[V], f[V]
DFS(G) // where prog starts
{
   for each vertex u ∈ V
   {
      color[u] = WHITE;
    prev[u]=NIL;
    f[u]=inf; d[u]=inf;
   }
   time = 0;
   for each vertex u ∈ V
     if (color[u] == WHITE)
         DFS_Visit(u);
}
```

```
DFS_Visit(u)
{
   color[u] = GREY;
   time = time+1;
   d[u] = time;
   for each v ∈ Adj[u]
   {
      if (color[v]==WHITE){
      prev[v]=u;
         DFS_Visit(v);
      }
}
   color[u] = BLACK;
   time = time+1;
   f[u] = time;
}
```

DFS And Cycles

What will be the running time?

```
Data: color[V], time,
      prev[V],d[V], f[V]
DFS(G) // where prog starts
{
   for each vertex u ∈ V
   {
      color[u] = WHITE;
    prev[u]=NIL;
    f[u]=inf; d[u]=inf;
   }
   time = 0;
   for each vertex u ∈ V
     if (color[u] == WHITE)
         DFS_Visit(u);
}
```

```
DFS_Visit(u)
{
   color[u] = GREY;
   time = time+1;
   d[u] = time;
   for each v ∈ Adj[u]
   {
      if (color[v]==WHITE){
      prev[v]=u;
         DFS_Visit(v);     }
   else {cycle exists;}
   }
   color[u] = BLACK;
   time = time+1;
   f[u] = time;
}
```

DFS And Cycles

- *What will be the running time?*
- A: O(V+E)
- We can actually determine if cycles exist in O(V) time
  - How??

DFS And Cycles

- *What will be the running time for undirected graph to detect cycle?*
- A: O(V+E)
- We can actually determine if cycles exist in O(V) time:
  - In an undirected acyclic forest, $|E| \leq |V| - 1$
  - So count the edges: if ever see |V| distinct edges, must have seen a back edge along the way

DFS And Cycles

- *What will be the running time for directed graph to detect cycle?*
- A: O(V+E)

Reference

- Cormen –
  - Chapter 22 (Elementary Graph Algorithms)
- Exercise –
  - 22.3-4 –Detect edge using d[u], d[v], f[u], f[v]
  - 22.3-11 – Connected Component
  - 22.3-12 – Singly connected