Note:
See Trough Detail sheet for specific information about trough installation.

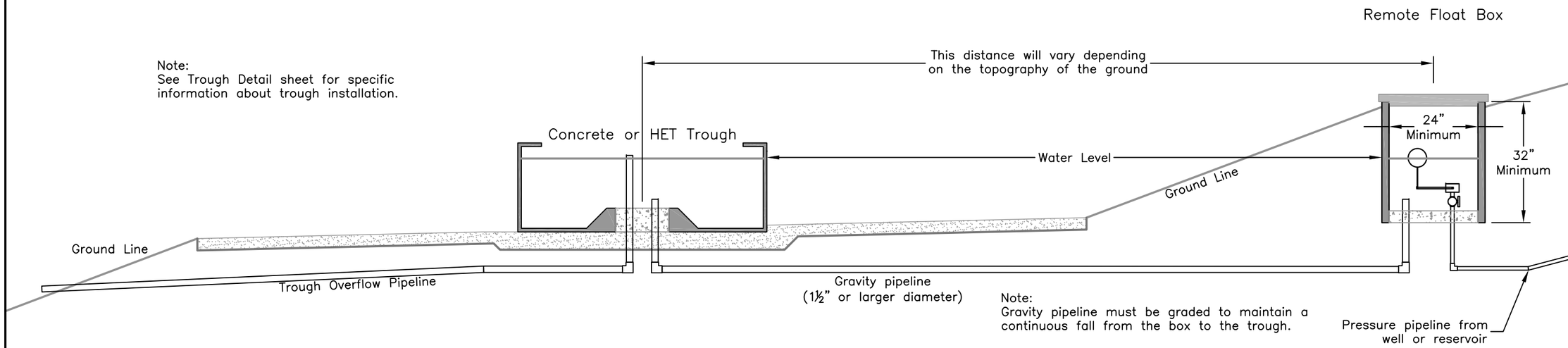

Note:
Gravity pipeline must be graded to maintain a continuous fall from the box to the trough.

Installation Detail

Note:
Lid may be constructed of other materials if approved by NRCS Engineer

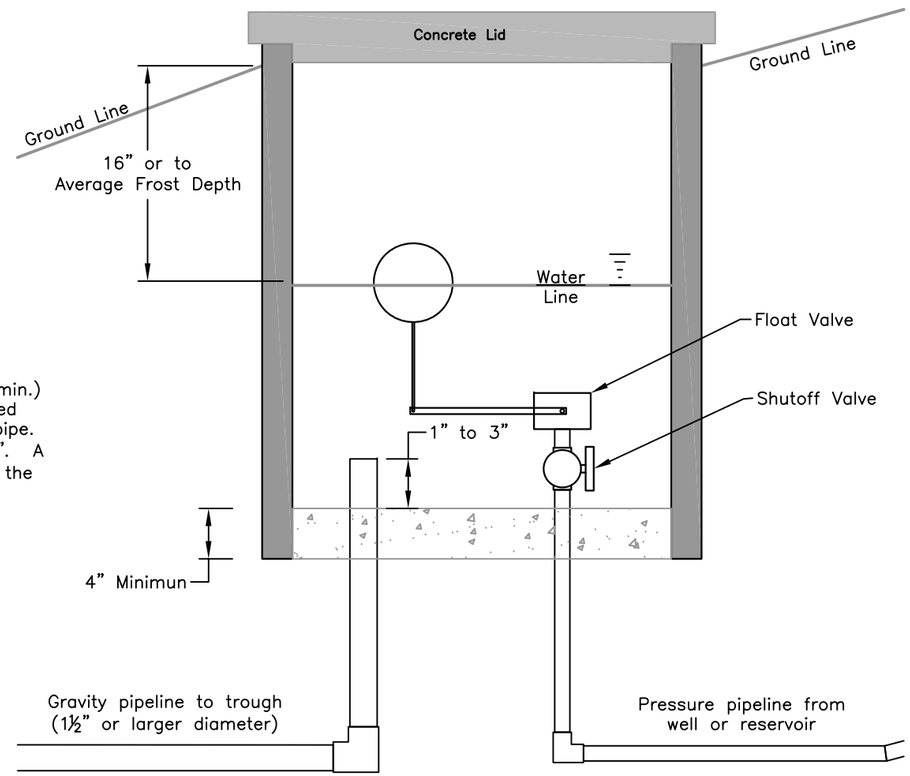

Note:
Float box can be constructed of 24" (min.) diameter concrete well casing, corrugated plastic, corrugated metal, or concrete pipe. Minimum depth of the box shall be 32". A 4" concrete floor shall be placed after the plumbing is installed.

Float Box Detail

Estimated Materials Quantities

Quantity	Unit	Item

VIRGINIA ENGINEERING STANDARD DRAWING

/s/
Mathew Lyons, SCE

Standard Drawings shall NOT be altered without State Conservation Engineer Approval

STANDARD DWG NO. VA-SO-906-Remote Float Valve

DATE 09/07 SHEET 1 OF 1

Date
Designed
Drawn
Checked
Approved

Remote Float Valve Box, Detail Sheet

NRCS
Natural Resources Conservation Service
United States Department of Agriculture

File Name
VA-SO-906.dwg

Drawing Name
Remote Float Valve Box

Sheet of