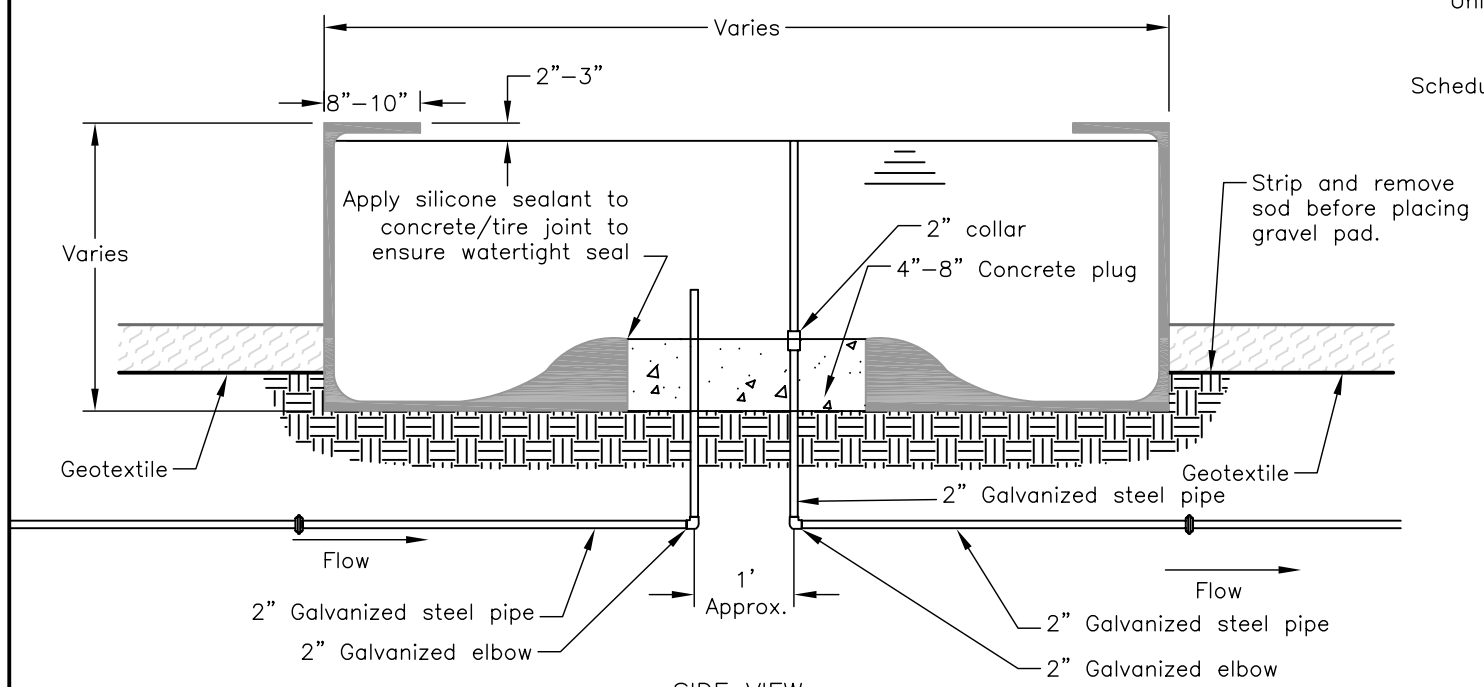

SIDE VIEW

Not to scale

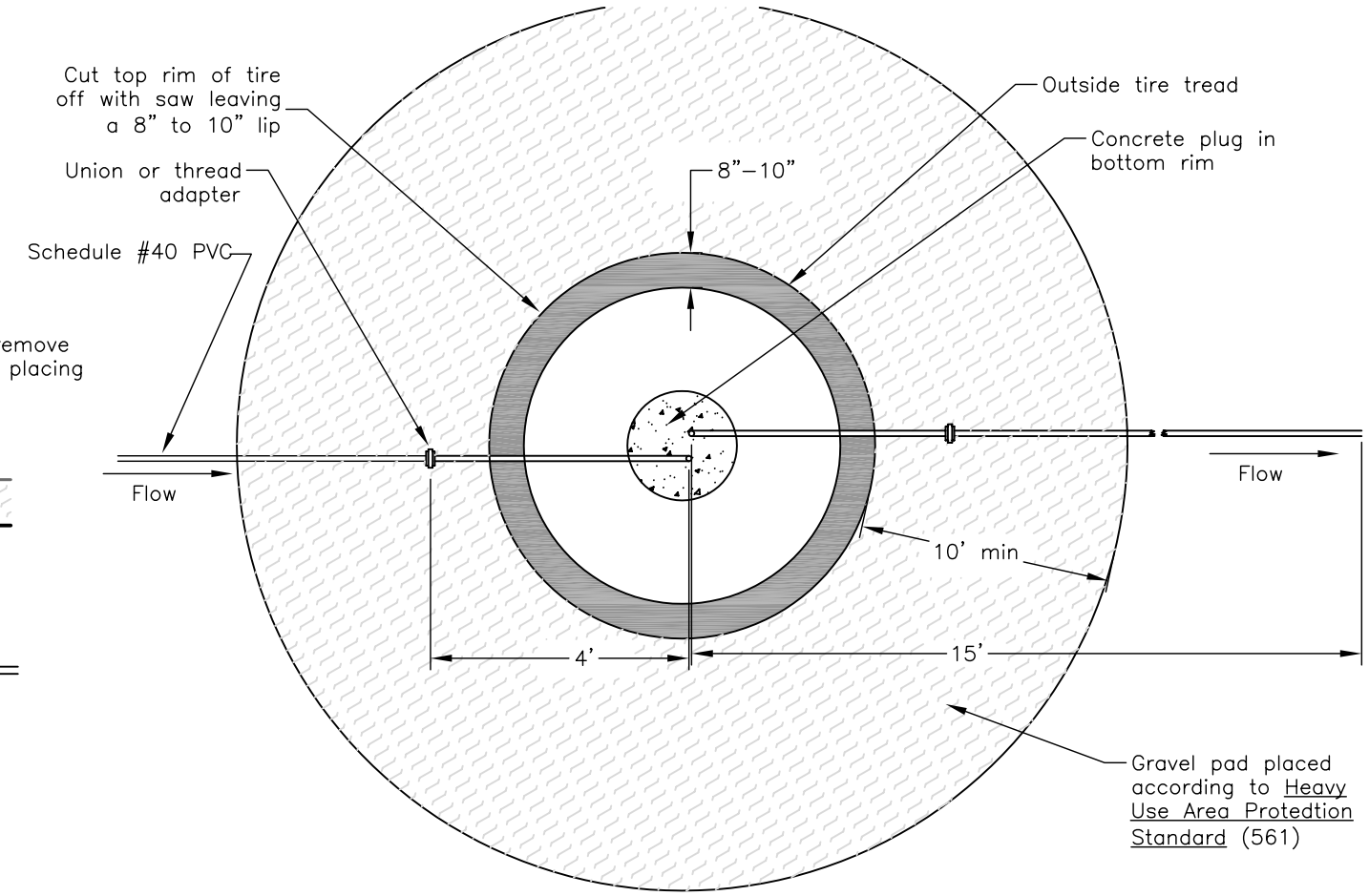

PLAN VIEW

Not to scale

Construction Notes

1. The watering facility shall be installed according to Virginia Watering Facility Standard (614).
2. A valve shall be installed in the line to regulate flow to the trough. The valve should be installed in housing that is weatherproof, well drained, and easily accessible. It must also be protected from livestock. High quality ball valves are recommended. Valves installed in the field may be housed in water–meter boxes, concrete casing, or other suitable housing.
3. All backfill for pipelines under the trough shall be compacted to the degree required to prevent caving after construction.
4. The foundation under and around the trough shall be cleared of all material not suited for the subgrade, including sod. All loose surface soil shall be removed to undisturbed material.
5. The trough site shall be free draining.
6. A protective surface shall be placed around the trough according to Virginia Heavy Use Area Protection Standard (561). At the minimum, install geotextile fabric around the trough and place VDOT #1 stone six inches deep in a ten foot radius around the trough. Then place three inches of VDOT #57 or #21A as a cap. Other types of stone may be installed with approval of the designer.
7. An overflow/drain line from the trough will be installed.
8. Geotextile shall meet the minimum requirements in Virginia Construction Specification VA–795 Geotextiles, page VA–795–4.
9. Seed all disturbed areas at the rates given in Virginia Construction Specification VA–706. Seeding: page VA–706–3

* If seeding is done outside recommended seeding dates, a nurse crop is to be used.

TROUGH OVERFLOW SCREEN DETAIL

Not to scale

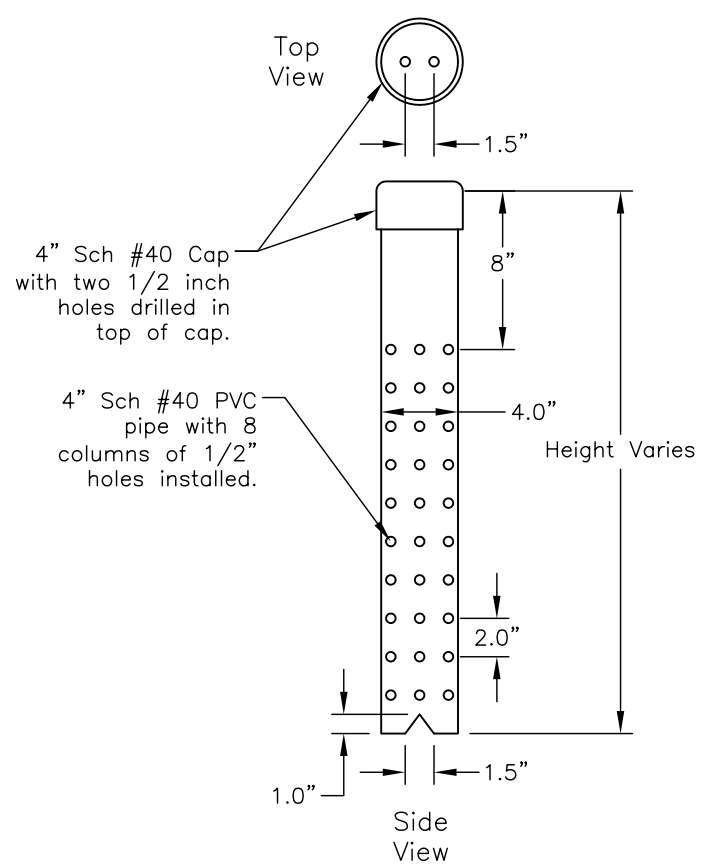

Estimated Quantities

Quantity	Unit	Item

VIRGINIA ENGINEERING STANDARD DRAWING	
/s/ Mathew Lyons, SCE	Standard Drawings shall NOT be altered without State Conservation Engineer Approval
STANDARD DWG NO.	VA–SO–904–Equip Tire Trough
DATE 10/05	SHEET 1 OF 1

Date

Designed

Drawn

Checked

Approved

Project Name

Landowner

County

Tract#

,Virginia

NRCS

Natural Resources Conservation Service
United States Department of Agriculture

File Name

Drawing Name

Sheet of