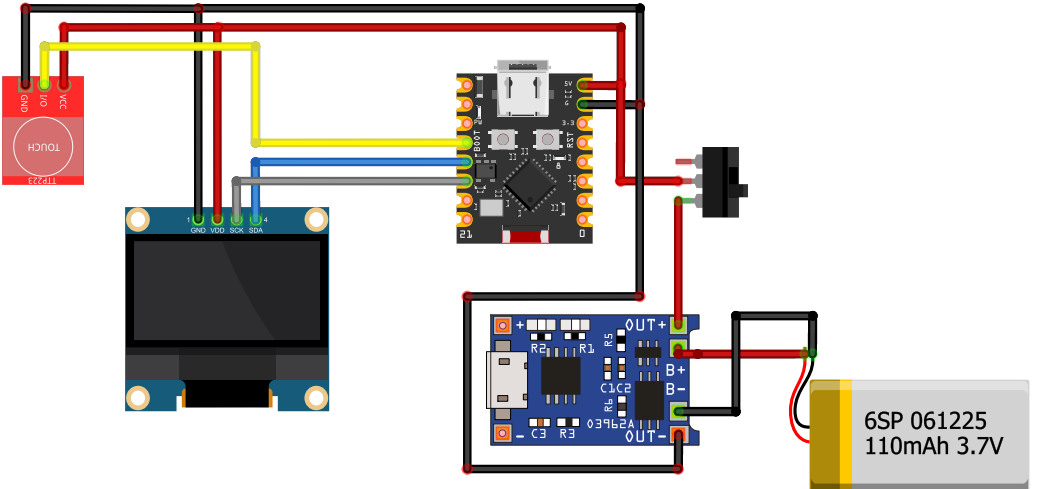

EDISON SCIENCE CORNER

fritzing