Physics potential :
Nonstandard $Hb\bar{b}$ interactions

LHeC@1.2 TeV & LHμC@3.7 TeV

Hamzeh Khanpour

AGH University of Kraków

Help4CERN weekly meeting; Feb 24, 2026, CERN

Outline: LHeC@1.2 TeV & LHμC@3.7 TeV

- Motivation & EFT setup: why probe nonstandard $Hb\bar{b}$ couplings; parameterization of CP-even/CP-odd components (e.g. T_R, T_I).
- Collider scenarios: LHeC@1.2 TeV vs LHμC@3.7 TeV assumptions (luminosity, beams) and the Higgs production/decay channels used ($Hb\bar{b}$).
- Signal & backgrounds: Monte Carlo setup, main backgrounds, detector-level objects (jets/b-tags, MET/leptons) and baseline event selection.
- Analysis strategy: discriminating variables/(cut-based or MVA), treatment of uncertainties, and how yields are converted into sensitivity.
- Results & comparison: fitted $\sigma(T_R)$, $\sigma(T_I)$, expected 95% CL limits for each collider, scaling with L and key takeaways/outlook.

Motivation: why nonstandard $Hb\bar{b}$ couplings?

- The decay $H \to b\bar{b}$ is the **dominant Higgs decay mode**, so any deviation in the $Hb\bar{b}$ interaction directly impacts Higgs phenomenology.

- New physics that couples to third-generation fermions can modify the Yukawa sector, making the bottom Yukawa a **sensitive window to BSM effects**.

- Future lepton–hadron colliders (LHeC and LHμC) provide a **clean production environment** and high statistics for $H \to b\bar{b}$, enabling tight constraints on small deviations.

Effective $Hb\bar{b}$ Lagrangian (CP-even + CP-odd)

- A convenient phenomenological parameterization is

$$\mathcal{L}_{hbb} = -\frac{m_b}{v}\, h\, \bar{b}\Big[(1+3T_R) + i\,(3T_I)\gamma_5\Big] b$$

- T_R : CP-even deviation from the SM Yukawa (interferes with SM).

$$\sigma(T_R) \;=\; \sigma_{\rm SM} \;+\; a\,T_R \;+\; b\,T_R^2$$

- T_I : CP-odd coupling (CP-violating; contributes to inclusive rates mainly as T_I^2)

$$\sigma(T_I) \;=\; \sigma_{\rm SM} \;+\; c\,T_I^2$$

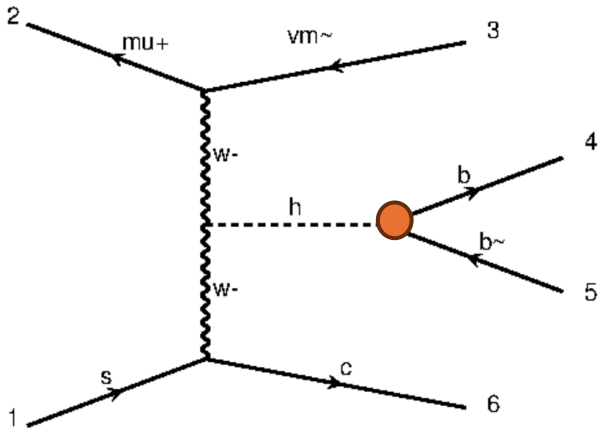

JHEP 05 (2020) 056, 2003.00099 [hep-ph]
Phys. Rev. D 109 (2024) 095023, 2305.05462 [hep-ph]

Collider scenarios: LHeC@1.2 TeV vs LHμC@3.7 TeV

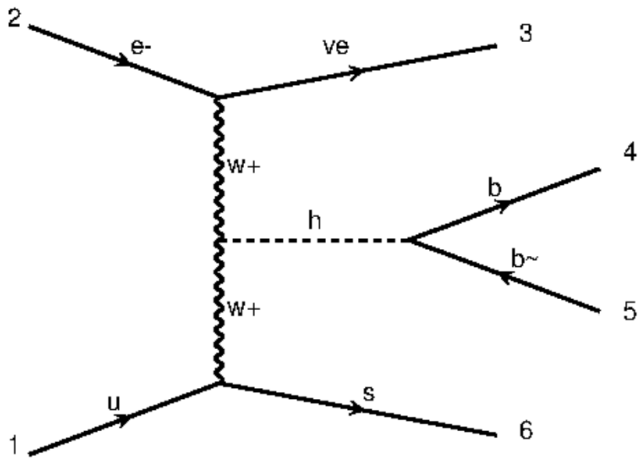

LHeC ($e^- p$, CC Higgs production, $H \to b\bar{b}$)

$$e^- p \to \nu_e h X, \qquad h \to b\bar{b}$$

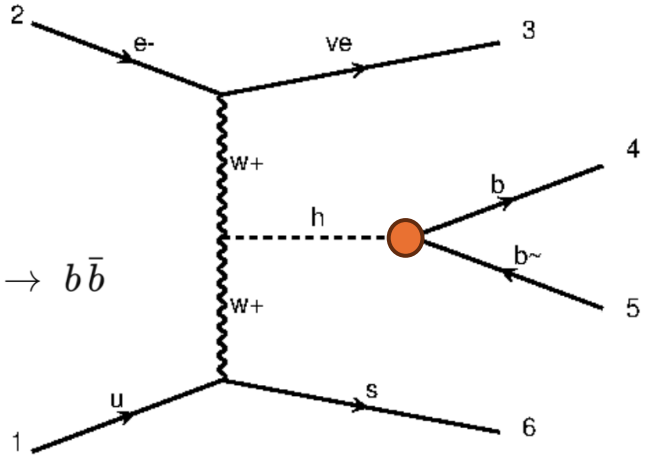

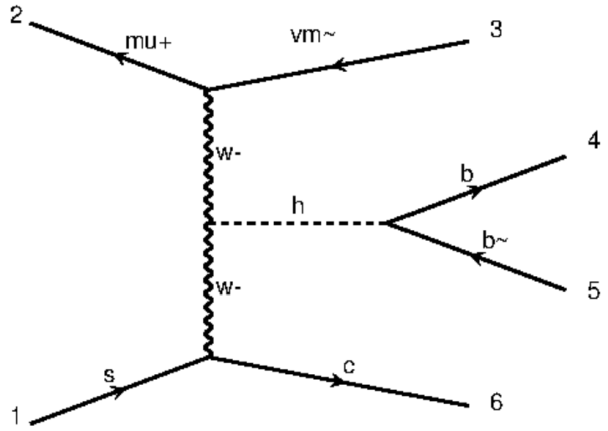

LHμC ($\mu^- p$, CC Higgs production, $H \to b\bar{b}$)

$$\mu^- p \to \nu_\mu h X, \qquad h \to b\bar{b}$$

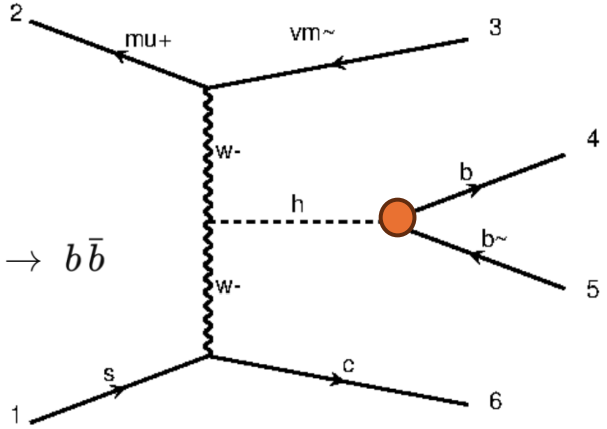

MG settings

LHeC (Ee = 50 GeV, Ep = 7000 GeV)

```
import model higgsCP_UFO
define p = g u d s c b u~ d~ s~ c~ b~
define j = g u d s c b u~ d~ s~ c~ b~

generate e- p > ve h j, (h > b b~)
```

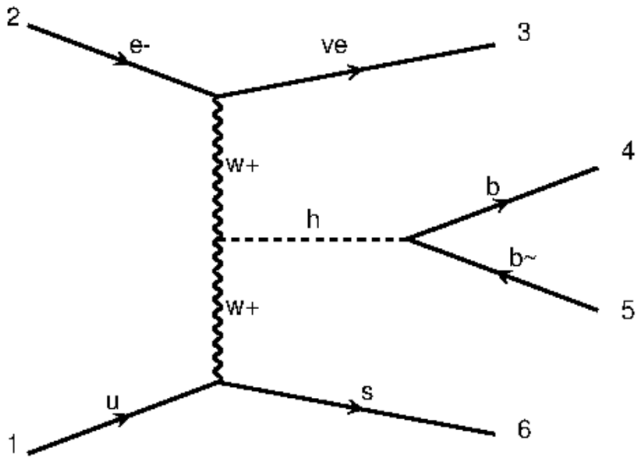

LHμC (Eμ = 500 GeV, Ep = 7000 GeV)

```
import model higgsCP_UFO
define p = g u d s c b u~ d~ s~ c~ b~
define j = g u d s c b u~ d~ s~ c~ b~

generate mu+ p > vm~ h j, (h > b b~)
```

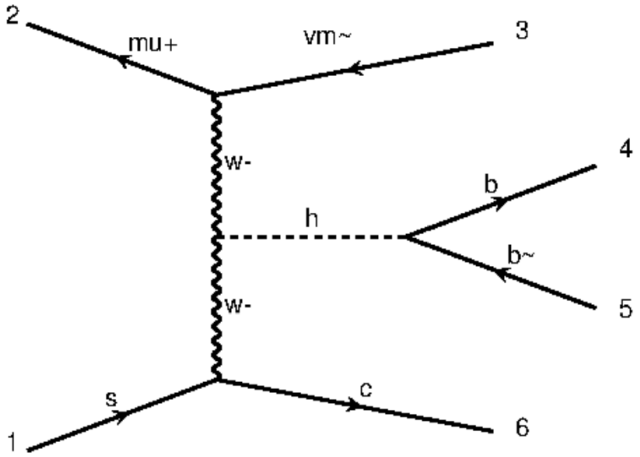

$$p_T^j > 5\ \mathrm{GeV}, \qquad |\eta_j| < 5.0$$

Dominant SM background list

ID	Background class	LHeC (e^-p)	LHμC (μ^+p)
(i)	Irreducible SM counterpart	$e^-p \to H\,j\,\nu_e,\ H \to b\bar{b}$	$\mu^+p \to H\,j\,\bar{\nu}_\mu,\ H \to b\bar{b}$
(ii)	Z+jet (heavy flavor)	$e^-p \to Z\,j\,\nu_e,\ Z \to b\bar{b}$	$\mu^+p \to Z\,j\,\bar{\nu}_\mu,\ Z \to b\bar{b}$
(iii)	Z+jet (charm mistag)	$e^-p \to Z\,j\,\nu_e,\ Z \to c\bar{c}$	$\mu^+p \to Z\,j\,\bar{\nu}_\mu,\ Z \to c\bar{c}$
(iv)	$\gamma/g \to b\bar{b}$ splitting	$e^-p \to V^* j\nu_e,\ V^* \to b\bar{b},\ (V=\gamma,g)$	$\mu^+p \to V^* j\bar{\nu}_\mu,\ V^* \to b\bar{b},\ (V=\gamma,g)$
(v)	$\gamma/g \to c\bar{c}$ (mistag)	$e^-p \to V^* j\nu_e,\ V^* \to c\bar{c},\ (V=\gamma,g)$	$\mu^+p \to V^* j\bar{\nu}_\mu,\ V^* \to c\bar{c},\ (V=\gamma,g)$
(vi)	Light jets (mistag)	$e^-p \to V^* j\nu_e,\ V^* \to j_\ell\bar{j}_\ell,\ (V=Z,\gamma,g;\ j_\ell=u,d,s)$	$\mu^+p \to V^* j\bar{\nu}_\mu,\ V^* \to j_\ell\bar{j}_\ell,\ (V=Z,\gamma,g;\ j_\ell=u,d,s)$
(vii)	Single t (charge-conj. of $\bar{t}$	$e^-p \to \bar{t}\,j\,\nu_e,\ \bar{t} \to W^-\bar{b},\ W^- \to jj$	$\mu^+p \to t\,j\,\bar{\nu}_\mu,\ t \to W^+b,\ W^+ \to jj$

Dominant leading-order SM background processes for the charged-current Higgs-to-$b\bar{b}$ analysis at **LHeC** (e^-p) and **LHμC** (μ^+p), yielding the common final-state signature $j\,b\bar{b}+\ \not{E}_T$ (ν_e or $\bar{\nu}_\mu$).

Discriminating variable

- Harder Higgs recoil in EFT : Nonstandard $Hb\bar{b}$ interactions modify the production amplitude, typically enhancing the high-energy / high-p_T phase space. A more boosted Higgs implies harder decay products.

- Boosted $H \to b\bar{b}$ gives harder b-jets : When the Higgs is boosted, the two b-jets carry larger transverse momentum; the leading b-jet p_T shifts to higher values compared to the SM.

- Shape discrimination beats normalization : The $p_T^{b_1}$ leads to a shape difference (SM softer vs EFT harder tail), which is more robust for extracting small EFT effects.

- Backgrounds fall steeply at high p_T : Major SM backgrounds typically have steeper p_T spectra. Cutting/using the tail of $p_T^{b_1}$ improves S/B and sensitivity.

- Direct sensitivity to interference / quadratic terms : The $p_T^{b_1}$ spectrum is especially sensitive in the high-p_T, tightening limits.

LHeC@1.2 TeV & LHμC@3.7 TeV

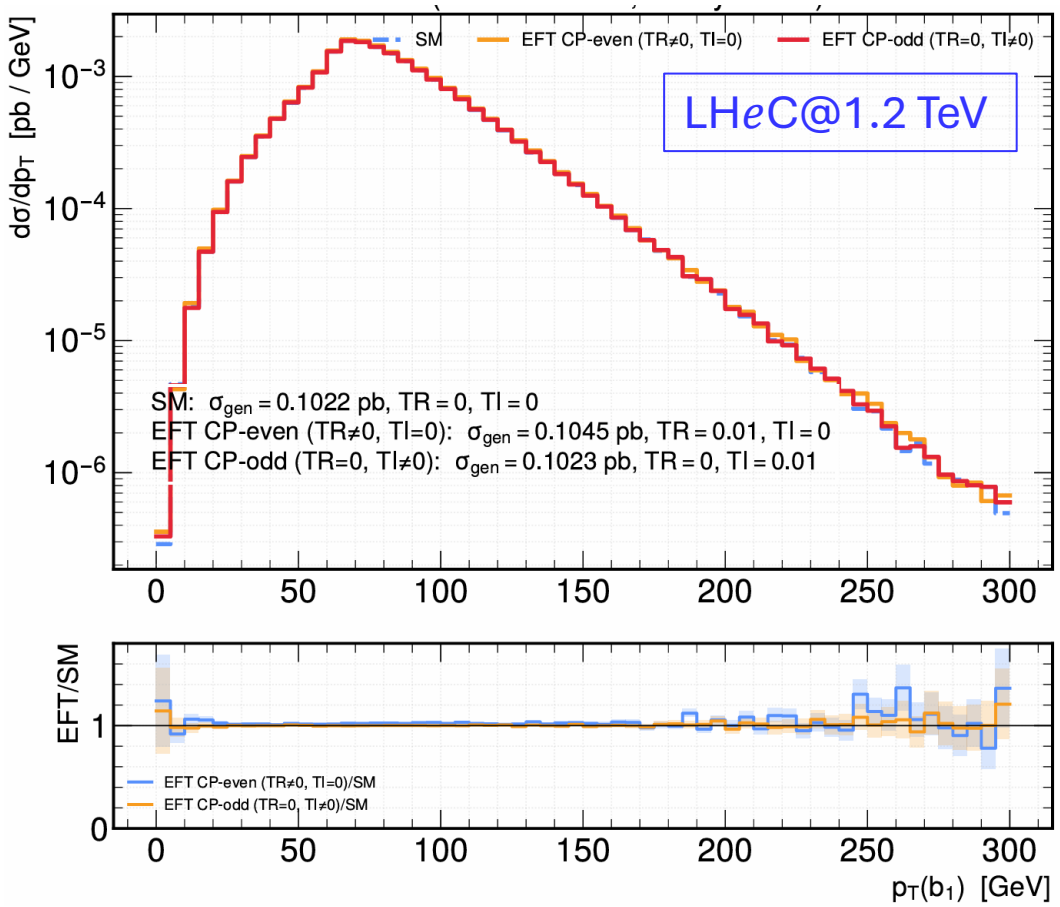

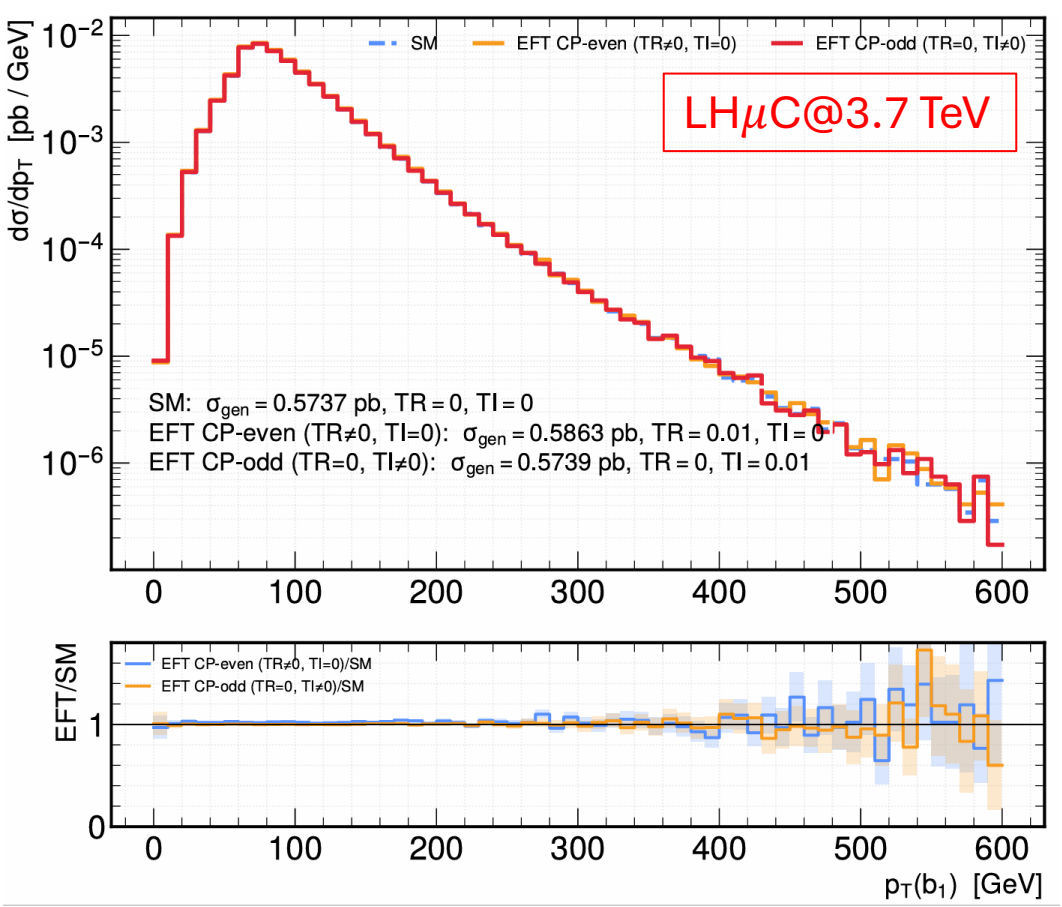

Differential distribution of the leading b-jet transverse momentum, $p_T(b_1)$,for the signal process at **LHeC@1.2 TeV** (left) and **LHμC@3.7 TeV** (right), comparing the SM prediction with representative **EFT CP-even** ($T_R \neq 0,\ T_I = 0$) and **EFT CP-odd** ($T_R = 0,\ T_I \neq 0$) scenarios. The lower panels show the EFT-to-SM ratios, highlighting the enhanced sensitivity in the high-p_T tail.

Expected 95% CL limits (I)

LHeC@1.2 TeV

Sample	TR	TI	σ_gen [pb]	N_events
SM	0	0	0.1022315443	1,000,000
EFT (CP-odd)	0	+0.01	0.1022664143	1,000,000
EFT (CP-odd)	0	−0.01	0.1022392944	1,000,000
EFT (CP-odd)	0	+0.1	0.1055466908	1,000,000
EFT (CP-odd)	0	−0.1	0.1055448104	1,000,000
EFT (CP-even)	+0.01	0	0.1044848894	1,000,000
EFT (CP-even)	−0.01	0	0.0998505189	1,000,000
EFT (CP-even)	+0.1	0	0.1206675259	1,000,000
EFT (CP-even)	−0.1	0	0.0735613915	1,000,000

LHμC@3.7 TeV

Sample	TR	TI	σ_gen [pb]	N_events
SM	0	0	0.5737256299	1,000,000
EFT (CP-even)	+0.01	0	0.5863493577	1,000,000
EFT (CP-even)	−0.01	0	0.5603691749	1,000,000
EFT (CP-even)	+0.1	0	0.6768917031	1,000,000
EFT (CP-even)	−0.1	0	0.4127357714	1,000,000
EFT (CP-odd)	0	+0.01	0.5739099319	1,000,000
EFT (CP-odd)	0	−0.01	0.5737580069	1,000,000
EFT (CP-odd)	0	+0.1	0.5919500347	1,000,000
EFT (CP-odd)	0	−0.1	0.5921394745	1,000,000

Generated Monte Carlo samples and total cross sections used to build the **rate-only, stat-only** expected 95% CL limits on anomalous $Hb\bar{b}$ couplings: **LHeC@1.2 TeV** (left) and **LHμC@3.7 TeV** (right). The tables list the benchmark EFT points in (T_R, T_I), the corresponding σ_{gen}values, and the number of simulated events per sample.

Expected 95% CL limits (II)

- Rate-only, stat-only setup : Use the total selected signal yield as the observable. Treat the SM prediction as the Asimov data, i.e. $N_{obs} = N_{SM} = \mathcal{L}\,\sigma_{SM}$. No other backgrounds are included (SM $Hb\bar{b}$ is the effective background).

- EFT cross-section model : Parameterize the EFT dependence from MG points with a fit:

$$\sigma(T_R) = \sigma_0 + aT_R + bT_R^2, \qquad \sigma(T_I) = \sigma_0 + cT_I^2,$$

- Likelihood / test statistic : Build a Poisson likelihood for the event count and use the profile-likelihood ratio (Asimov) test statistic & set 95% CL.

- Extract limits : Solve the Poisson likelihood to get the two-sided interval.

Expected 95% CL limits (III)

- The T_I limits are symmetric ($\pm T_I$) because the inclusive rate depends on T_I^2, while T_R gives a two-sided asymmetric interval due to the linear + quadratic dependence.

- LHμC is stronger than LHeC for both couplings T_I and T_R (for $\mathcal{L} = 1$ ab^{-1}).

Collider	σ_{SM} [pb]	T_R (95% CL)	T_I (95% CL)
LHeC @ 1.2 TeV	0.1022	$[-0.0026, +0.0027]$	$[-0.0437, +0.0437]$
LHμC @ 3.7 TeV	0.5737	$[-0.00108, +0.00117]$	$[-0.0289, +0.0289]$

Summary and conclusions

- LHμC presents much tighter EFT sensitivity than LHeC (rate-only, stat-only, $L = 1\ \mathrm{ab}^{-1}$).

- Higher event rate (bigger σ_{SM}) is the engine behind the improvement.

- More energetic kinematics → stronger leverage from shapes: the leading-b $p_T(b_1)$ distribution at LHμC extends to much higher values, hence LHμC has more phase space, and provides high-energy tails studies.

- HET@LHμμC is a strong platform for multiple phenomenology studies and publications (beyond this first result): once LHμC is included explicitly in our whitepaper - with dedicated tables, benchmark points, and analysis setup - it naturally enables several publishable follow-ups.

Thank
you!