(a) Overall architecture (wf = 4, depth = 7, 128 × 128 input, 60.7 M parameters)

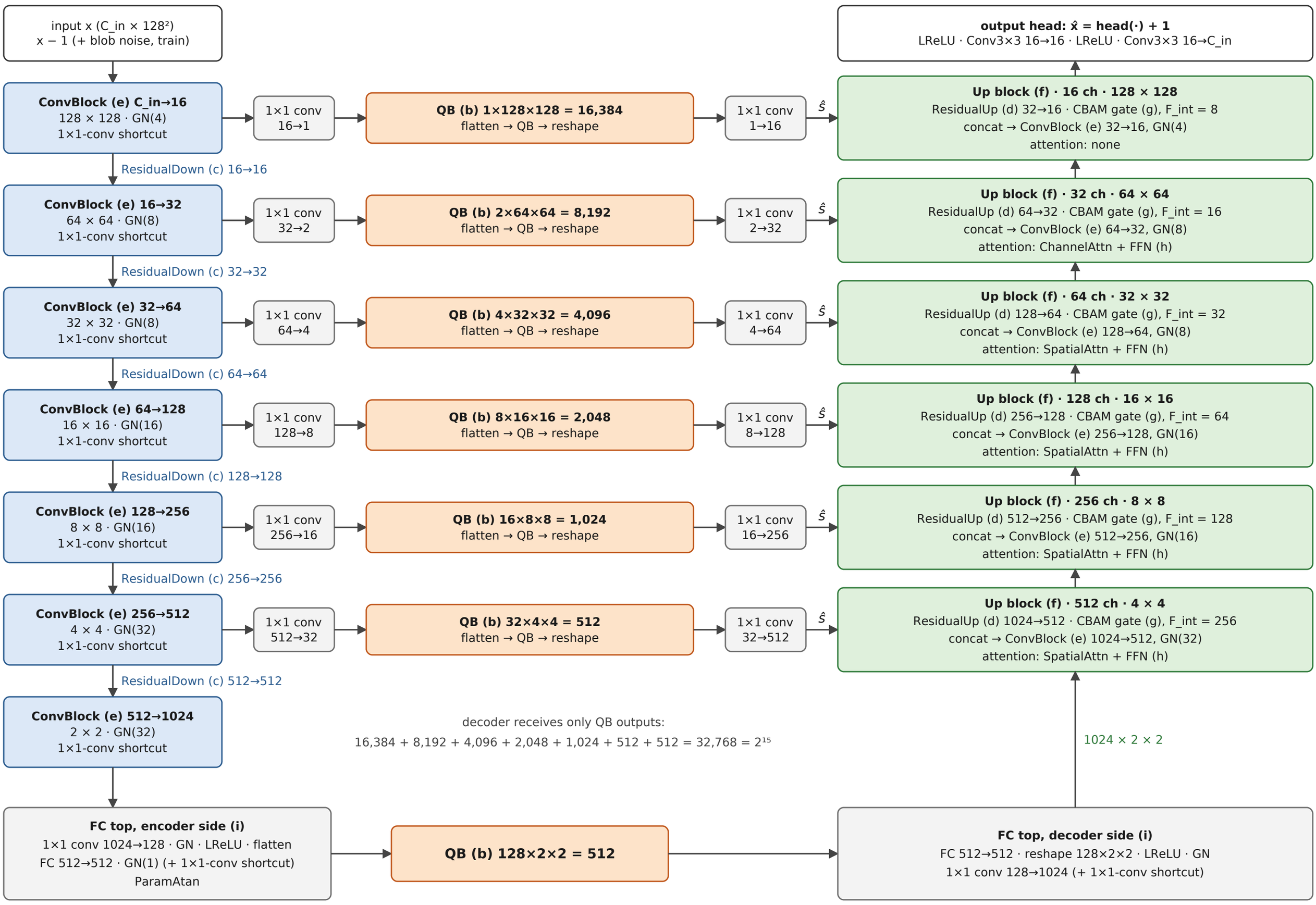

(b) QB layer

N elements, per sample

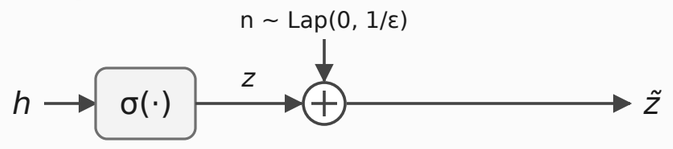

train: z̃ = σ(h) + n (noise on)
test: z̃ = σ(h) + n (noise kept, 8 draws averaged)
ε-local DP per element (sensitivity Δ = 1);
I(X; X̂) ≤ N·c(ε) for any encoder and decoder

(c) ResidualDown

C×H×W → C×H/2×W/2

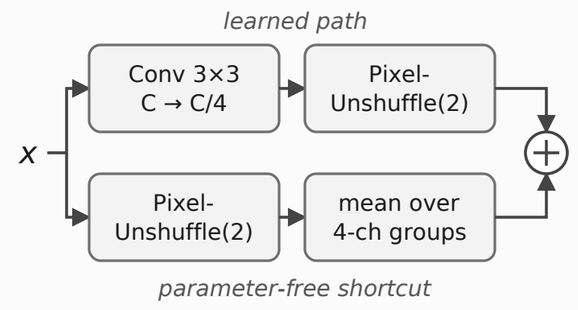

sum → C × H/2 × W/2 (no norm / activation)

(d) ResidualUp

C×H×W → C′×2H×2W

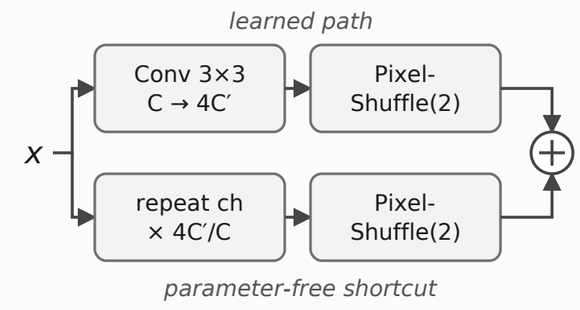

sum → C′ × 2H × 2W (here C = 2C′: repeat × 2)

(e) ConvBlock

C_in → C

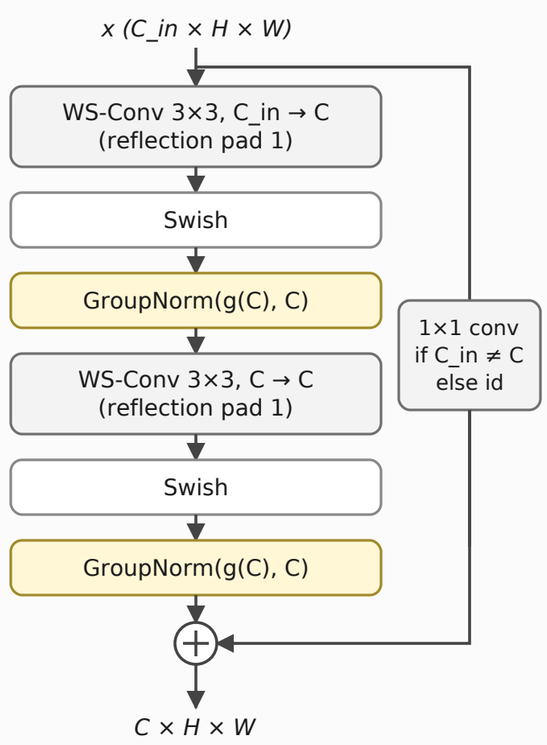

WS = weight-standardised conv; g(C): 16→4, 32→8, 64→8, 128→16, 256→16, 512/1024→32; shortcut on by default (--no-using_identity_connection removes it)

(f) Up block

2C×H×W, ŝ → C×2H×2W

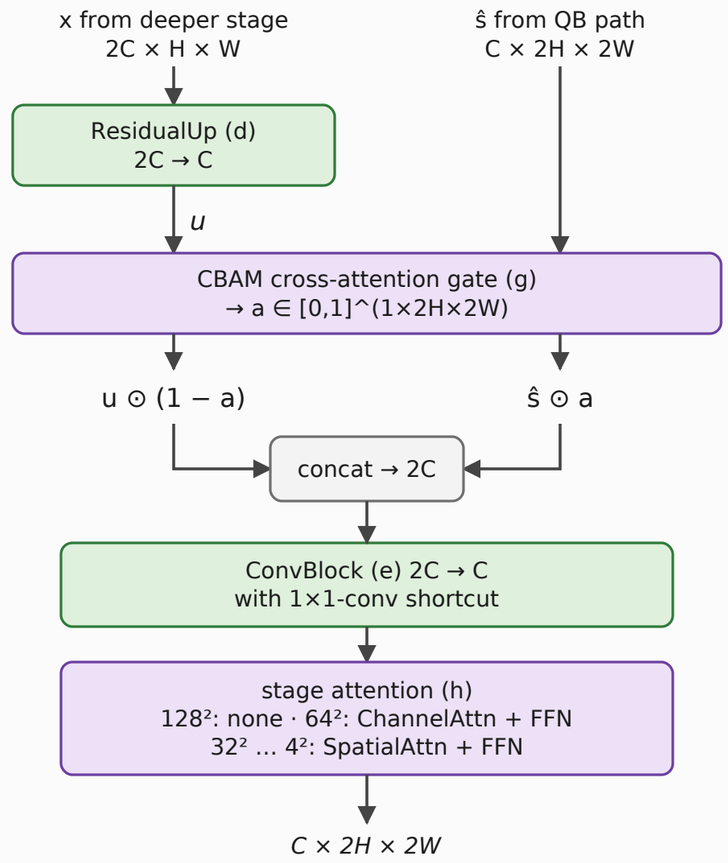

skips are only gated, never bypass the QB;
attention blocks use gradient checkpointing

(g) CBAM cross-attention gate

F_int = C/2

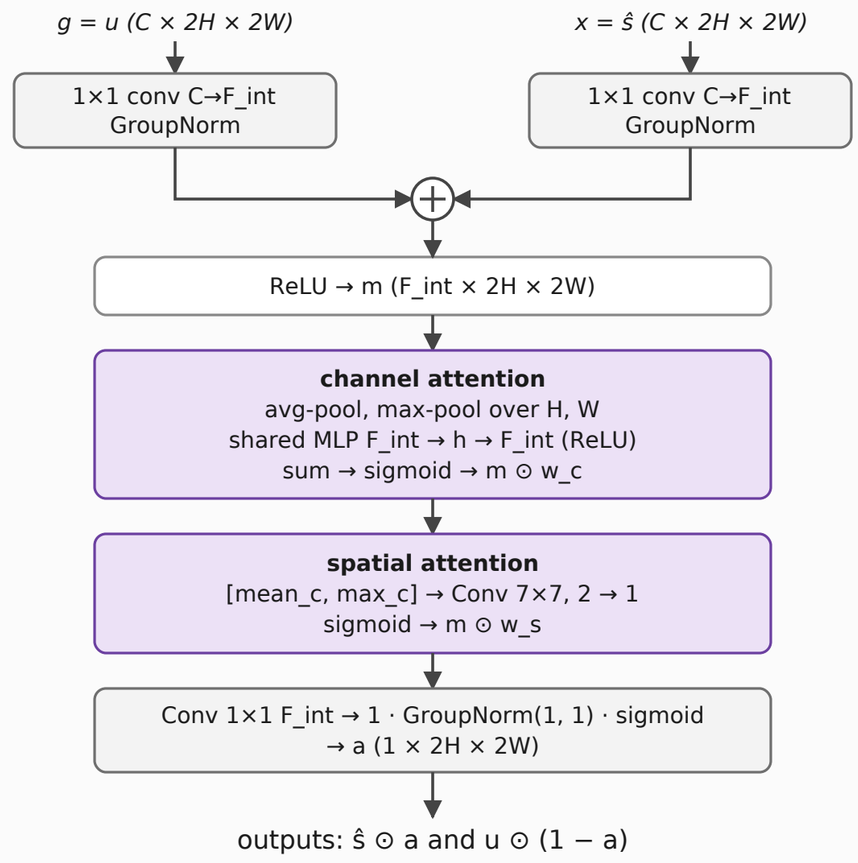

MLP hidden width h = max(4, F_int/16): 4, 4, 4, 4, 8, 16
(F_int = 8, 16, 32, 64, 128, 256 for the 128² … 4² stages)

(h) Attention and FFN blocks

all pre-norm residual, output proj. zero-initialised

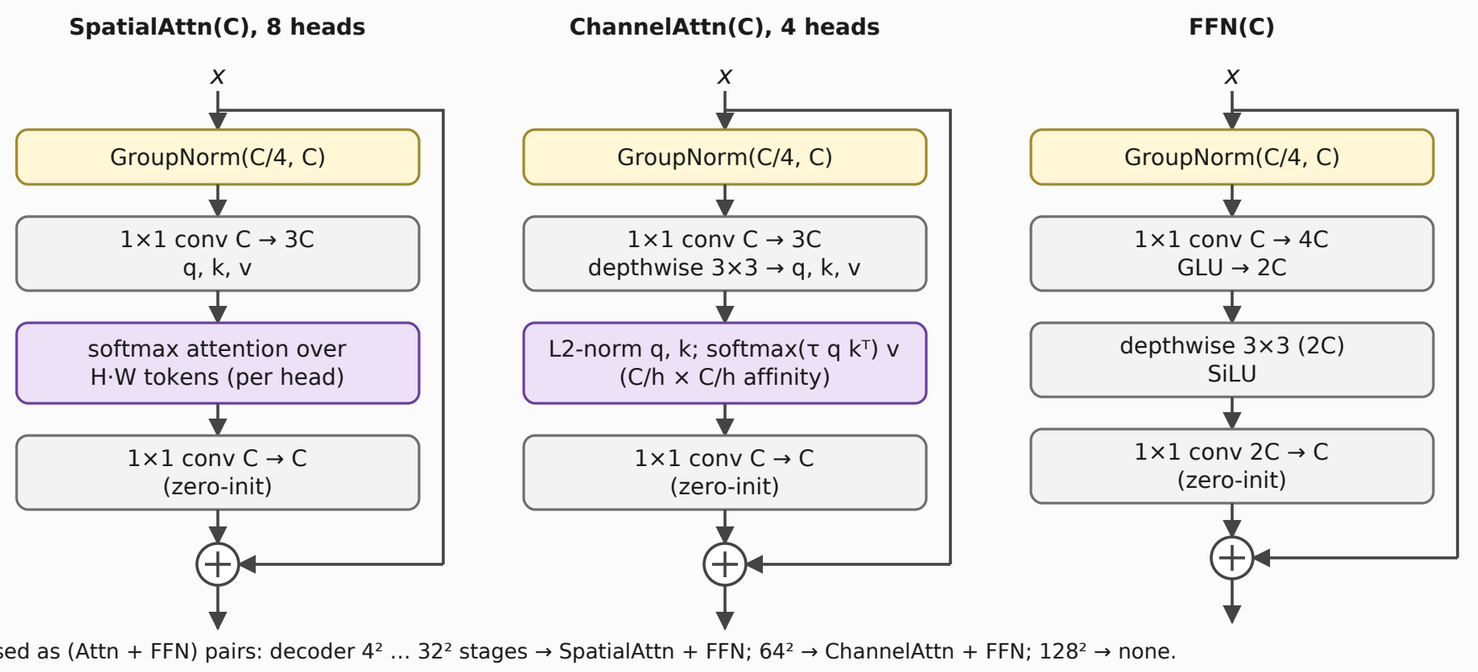

Used as (Attn + FFN) pairs: decoder 4² … 32² stages → SpatialAttn + FFN; 64² → ChannelAttn + FFN; 128² → none.
SpatialAttn uses scaled-dot-product attention; ChannelAttn (Restormer-style) has a learnable temperature τ per head.

(i) FC top around the bottom QB

2 × 2, 1024 ch

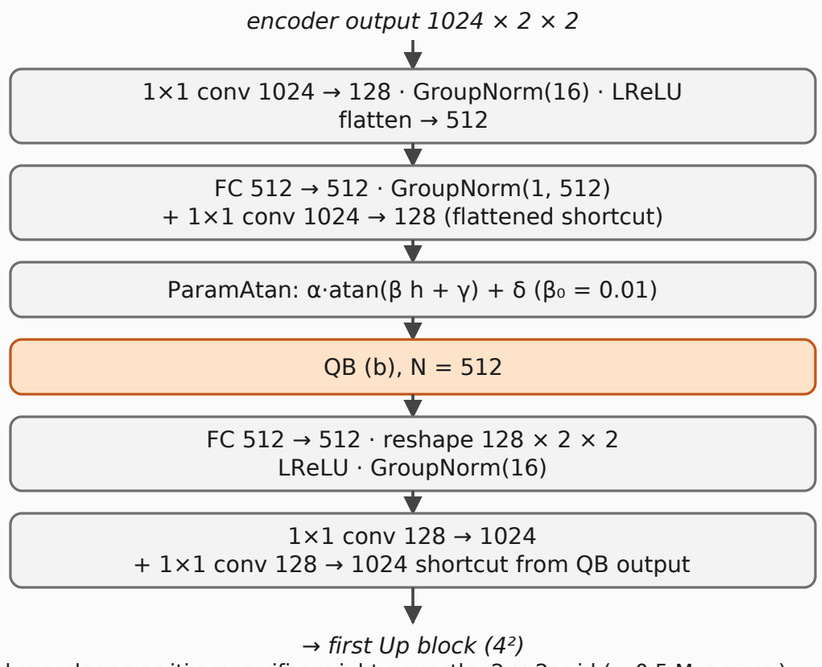

FC layers have position-specific weights over the 2 × 2 grid (≈ 0.5 M params);
ParamAtan keeps σ(·) in the QB away from saturation at init

(j) Training objective and anomaly score

train: AdamW, lr 1e-3, cosine decay to 1e-5 after 5 warm-up epochs, gradient clipping 1.0; input x + blob noise; all QB layers add Laplace noise; L = mean (x − x̂)² + λ_p · L_perc(x, x̂) [+ optional KL sparsity on σ(h)]
L_perc: relative L1 between VGG19 relu4_2 features (ImageNet weights), random shift ≤ 8 px in training; variance head unused (--not_use_log_var)
test: QB noise kept, scores averaged over 8 noise draws; anomaly map = (x − x̂)² + λ_p · upsampled VGG map; image score = perceptual term (AUC_perceptual)