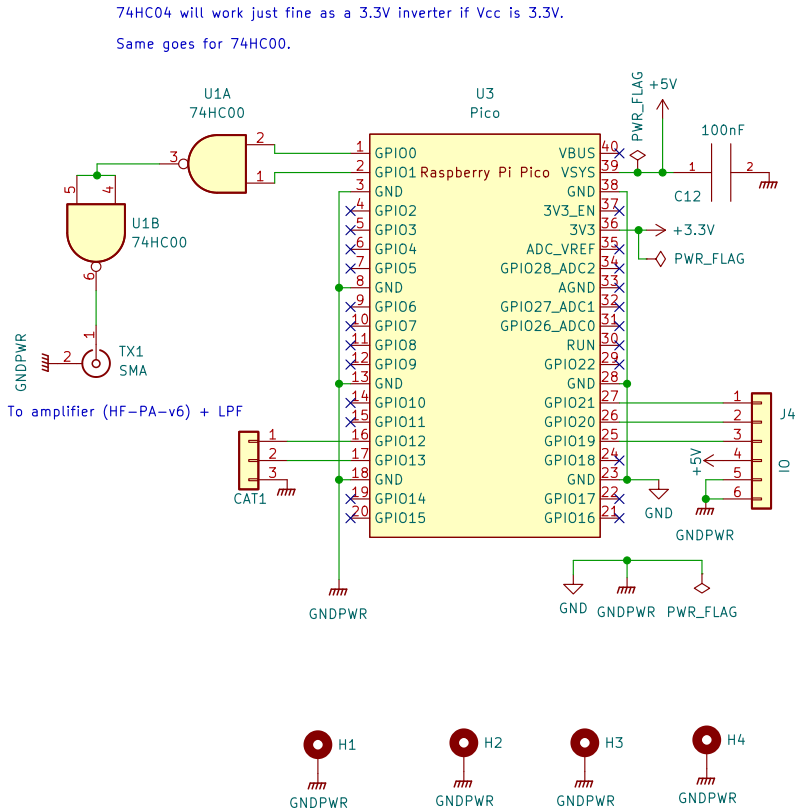

VU3CER

Sheet: /

File: cw-beacon.kicad_sch

Title: Easy CW Beacon without Si5351

Size: User	Date: 2022-04-20	**Rev: v0.01**
KiCad E.D.A. eeschema 6.0.5-a6ca702e91~116~ubuntu22.04.1		Id: 1/1