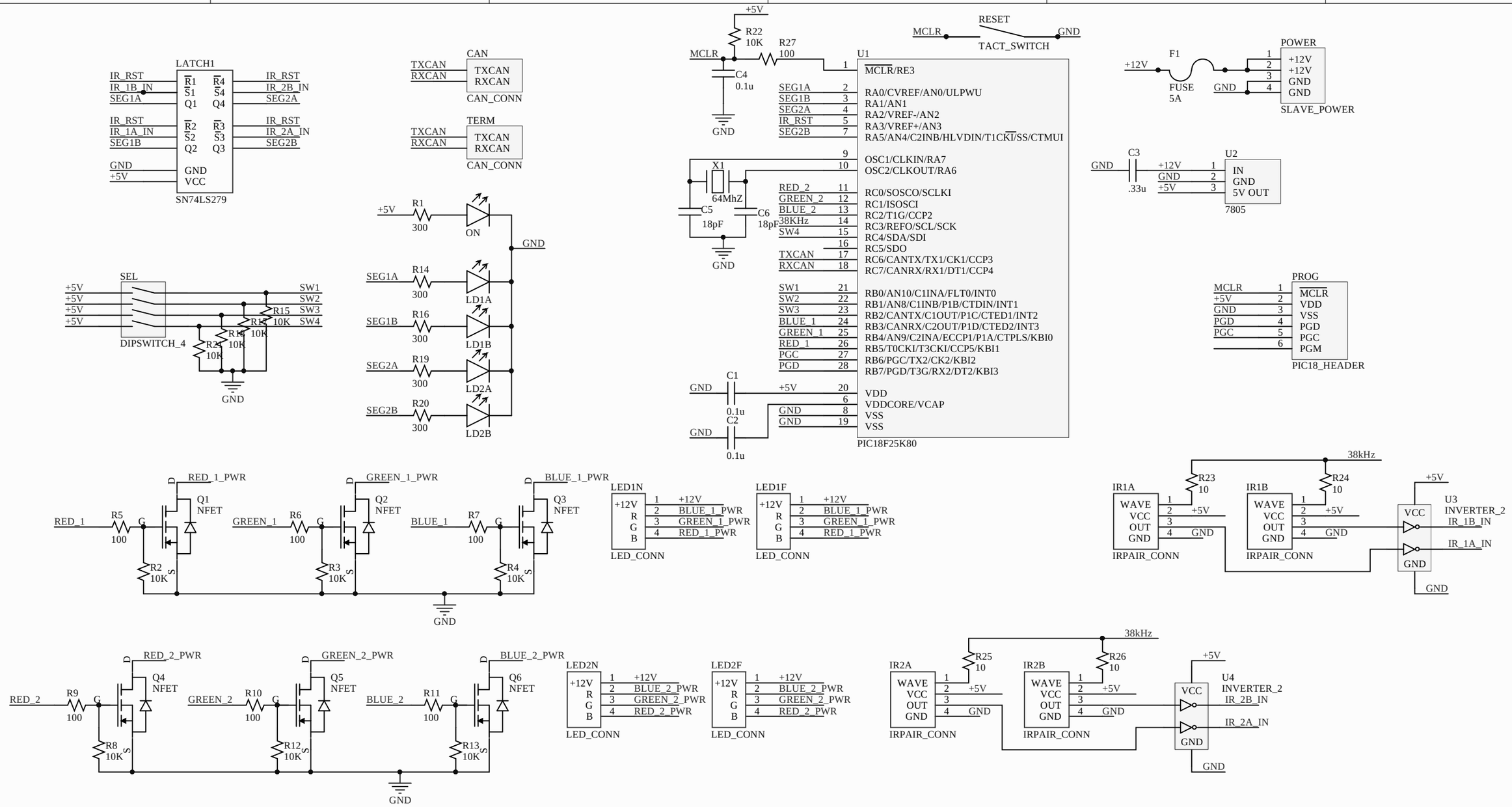

Title		
Size B	Number	Revision
Date: 4/8/2016		Sheet of
File: C:\Users\..\Slave.SchDoc		Drawn By: