EECE2310 Introduction to Digital Design and Computer Architecture
Summer 2 2025 Semester

Homework 1

EECE2310 Course Section 01

Name: Hang Hang
NU ID: 002148205

Date Submitted:
7/9/2025

Q1 (10 Points)

The following are functions of x, y, and z. Find the **complement** of the functions by applying DeMorgan's theorems as many times until it cannot be applied anymore:

(a) $F1 = x'yz' + x'y'z$ (b) $F2 = x(y'z' + yz)$

(a): Taking complement:

$\overline{F1} = \overline{x'yz' + x'y'z}$

Applying De Morgan's theorems:

$\overline{F1} = \overline{x'yz'} \,.\, \overline{x'y'z}$

$= (x + \overline{y} + z) \,.\, (x + y + \overline{z})$ (no further application of De Morgan's after this - just Boolean algebra operations)

$= x \,.\, x + x \,.\, y + x \,.\, \overline{z} + \overline{y} \,.\, x + \overline{y} \,.\, y + \overline{y} \,.\, \overline{z} + z \,.\, x + z \,.\, y + z \,.\, \overline{z}$

$= x \,.\, x + x \,.\, y + x \,.\, \overline{z} + \overline{y} \,.\, x + \overline{y} \,.\, \overline{z} + z \,.\, x + z \,.\, y$

$= x\,(1 + y + \overline{z} + \overline{y} + z) + \overline{y} \,.\, \overline{z} + z \,.\, y$

$= x + \overline{y}\,\overline{z} + yz$

(b) Taking complement:

$\overline{F2} = \overline{x(y'z' + yz)}$

Applying De Morgan's theorems:

$\overline{F2} = \overline{x} + (\overline{y'z' + yz})$

$= \overline{x} + (\overline{y'z'} \,.\, \overline{yz})$

$= \overline{x} + (y + z)(\overline{y} + \overline{z})$ (no further application of De Morgan's after this - just Boolean algebra operations)

$= \overline{x} + (y\overline{y} + y\overline{z} + z\overline{y} + z\overline{z})$

$= \overline{x} + y\overline{z} + \overline{y}z$

Q2 (10 Points)

Express the **complement** of the following functions in sum-of-minterms form:

(a) $F(A,B,C,D) = \Sigma m(2, 4, 7, 10, 12, 14)$

(b) $F(x, y, z) = \Pi M(3, 5, 7)$

Minterms (F) represent input combinations product an output of 1, while its complement ($\overline{F}$) covers the remaining combinations (output 0). Together, F and $\overline{F}$ should cover all possible minterms exactly once.

(a) For F (A, B, C, D) w/ 4 variables, we got 2^4=16 possible minterm. Thus, $\overline{F}$ would be all other minterms:

$\overline{F(A,B,C,D)} = \sum m(0, 1, 3, 5, 6, 8, 9, 11, 13, 15)$

(b) Similarly, for F(x, y, z), we got 2^3 =8 possible maxterms.

$\overline{F(x,y,z)} = \prod M(0, 1, 2, 4, 6) = \sum m(3, 5, 7)$

Q3 (10 Points)

Express the following unsigned numbers in decimal (show all the steps):

(a) $(10110.0101)_2$ (b) $(16.5)_{16}$

(c) $(26.24)_8$ (d) $(DADA.B)_{16}$

(a)

i. Integer part (10110_2): $0\times2^0+1\times2^1+1\times2^2+0\times2^3+1\times2^4=22$

ii. Fractional part ($.0101_2$): $0\times2^{-1}+1\times2^{-2}+0\times2^{-3}+1\times2^{-4}=0.3125$

iii. Combine: $(10110.0101)_2 =(22.3125)_{10}$

(b)

i. Converting each digit to decimal: 6=6, 1=1, 5=5

ii. Multiply by base 16 raised to the position index:

a. Integer part (16_{16}): $6\times16^0+1\times16^1=22$

b. Fractional part ($.5_{16}$): $5\times16^{-1}=0.3125$

iii. Combine: $(16.5)_{16} = (22.3125)_{10}$

(c)

i. Integer part (26_8): $6\times8^0+ 2\times8^1= 22$

ii. Fractional part ($.24_8$): $2\times8^{-1}+4\times8^{-2}=0.25+1/16=0.3125$

iii. Combine: $(26.24)_8 = (22.3125)_{10}$

(d)

i. Converting each digit to decimal: D=13, A=10, B=11

ii. Multiply by base 16 raised to the position index:

a. Integer part ($DADA_{16}$)= $10\times16^0+13\times16^1+10\times 16^2+13\times 16^3=56026$

b. Fractional part ($.B_{16}$)= $11\times16^{-1}= 11/16=0.6875$

iii. Combine: $(DADA.B)_8 = (56026.6875)_{10}$

Q4 (10 Points)

Convert the following unsigned **binary** numbers to **hexadecimal** and to **decimal** (show all the steps):

(a) 1.10010 (b) 110.010

By comparing their binary representation, explain why the decimal answer in (b) is 4 times that in (a).

(a) <u>Binary to hex</u>:

a. Group all digits in sets of 4 bits:

i. Pad the integer part with zeros on the left: $(1)_2$-> $(0001)_2=(1)_{16}$

ii. Fractional part: $(.1001)_2= (9)_{16}$, padding zeros right: $(0000)_2=(0)_{16}$

b. Combine: $(1.10010)_2=(1.90)_{16}$

<u>Binary to dec</u>:

a. Integer: $(1)_2= 1\times2^0=1$

b. Fraction: $(.10010)_2 = 1\times2^{-1}+0\times2^{-2}+0\times2^{-3}+1\times2^{-4}+0\times2^{-5}=(0.5625)_{10}$

c. Combine: $(1.10010)_2=(1.5625)_{10}$

(b) Binary to hex:

a. Group digits in sets of 4 bits
   i. Integer part: pad with zeros on the right: $(110)_2$-> $(0110)_2=(6)_{16}$
   ii. Similarly, fractional part: $(.0100)_2=(4)_{16}$
b. Combine: $(110.010)_2 = (6.4)_{16}$

Binary to dec:

a. Integer: $(110)_2= 0\times2^0+1\times2^1+1\times2^2=6$
b. Fraction: $(.010)_2=0\times2^{-1}+1\times2^{-2}+0\times2^{-3}= (0.25)_{10}$
c. Combine: $(110.\ 010)_2=(6.25)_{10}$

Explanation:

For binary number, each shift of its binary point means exactly multiplying or dividing the value by 2. If we compare (a) $(1.10010)_2$ and (b) $(110.\ 010)_2$, the digits are the same, but the binary point is shifted two positions to the right, so that multiplies the value by $2\times 2 = 4$. Therefore, the decimal value of (b) is 4 times larger than (a).

Q5 (10 Points)

Convert decimal numbers +49, +29, -49, -29 to binary, using the signed-2's-complement representation with 8-bit storage. Then perform the binary equivalent of the following operations:

(a) (+29) + (-49) (b) (-29) + (+49) (c) (-29) + (-49).

Convert the binary results back to decimal and verify that they are correct.

Dec to binary:

Positives converted directly to binary (MSB=0):

$(+49)_{10}= \underline{(00110001)_2}$

$(+29)_{10}= \underline{(00011101)_2}$

Negative numbers (MSB=1, using 2's complement):

$(-49)_{10}$: take 1's comp: $(11001110)_2$ -> Add 1: $\underline{(11001111)_2}$

$(-29)_{10}$: take 1's comp: $(11100010)_2$ -> Add 1: $\underline{(11100011)_2}$

(a) (+29) + (-49)

Binary result: $(00011101)_2 + (00110001)_2= (11101100)_2$

Decimal result (use 2's comp for its decimal magnitude):

Invert bits (1's comp): $(00010011)_2$, Add 1: $(00010100)_2 = 4+16 = (-20)_{10}$

(b) (-29) + (+49)

Binary result: $(11100011)_2+(00110001)_2=(00010100)_2$

Since MSB=0, so directly convert to **decimal result** → $4+16=(20)_{10}$

(c) (-29) + (-49)

Binary result: $(11100011)_2+ (11001111)_2=(10110010)_2$

Decimal result:

Invert bits (1's comp): $(01001101)_2$, Add 1: $(01001110)_2 = 64+8+4+2= (-78)_{10}$

Q6. (10 Points)

In an 8-bit 2's complement binary system, what is the result of each of the following subtract operations? Is there any overflow? You must show how you detect overflow in the result only by verifying the **carry into the most significant bit and the carry out** of it.

(a)

```
  00101011
- 10110110
```

(b)

```
  01000001
- 10000010
```

(a)

```
  00101011
- 10110110
```

00

```
  00101011
+ 01001010
  01110101
```

Since carry into the MSB (bit 7→ bit 8)=0 and carry out from the MSB (after bit 8) =0, there is no overflow.

(b)

```
  01000001
- 10000010
```

01

```
  01000001
+ 01111110
  10111111
```

Since carry into the MSB = 1 and carry out from the MSB =0, the two don't match, so there is overflow.

Q7 (10 Points)

Express the following function as a sum of minterms (e.g., F = Σm(3, 6, 8) and as a product of maxterms (e.g., F = ΠM(3, 6, 8): (show all steps)

F(A, B, C, D) = B'D + A'D + BD

Row	A	B	C	D	B'D	A'D	BD	F
0	0	0	0	0	0	0	0	0
1	0	0	0	1	1	1	0	1
2	0	0	1	0	0	0	0	0
3	0	0	1	1	1	1	0	1
4	0	1	0	0	0	0	0	0
5	0	1	0	1	0	1	1	1
6	0	1	1	0	0	0	0	0
7	0	1	1	1	0	1	1	1
8	1	0	0	0	0	0	0	0

9	1	0	0	1	1	0	0	1
10	1	0	1	0	0	0	0	0
11	1	0	1	1	1	0	0	1
12	1	1	0	0	0	0	0	0
13	1	1	0	1	0	0	1	1
14	1	1	1	0	0	0	0	0
15	1	1	1	1	0	0	1	1

For **sum of minterms**, we select rows where F=1:
F (A, B, C, D)= ∑ m(1, 3, 5, 7, 9, 11, 13, 15)
For **product of maxterms**, it would be rows=0 or all the remaining rows:
F(A, B, C, D)= ∏ M (0, 2, 4, 6, 8, 10, 12, 14)

Q8 (10 Points)

Simplify the following Boolean functions, using *Karnaugh* maps:

(a) $F(A,B,C,D) = \Sigma(0, 2, 4, 5, 6, 7, 8, 10, 13, 15)$

(b) $F(A,B,C,D) = AB'C + B'C'D' + BCD + ACD' + A'B'C + A'BC'D$

(a) Karnaugh map

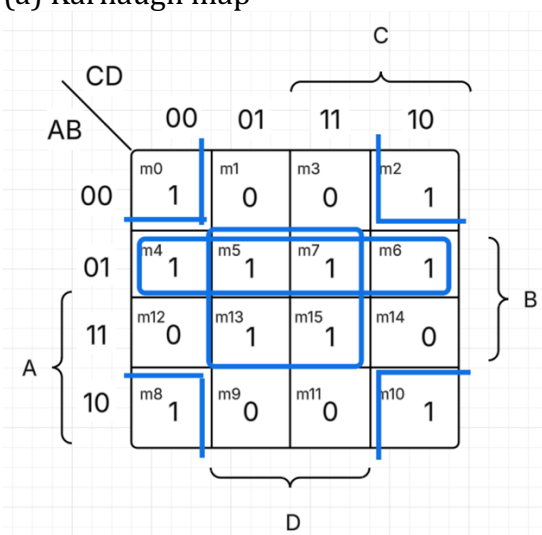

Group 1 (4 cells): m4, m5, m7, m6 → simplifies to A'B
Group 2 (4 cells): m5, m7, m13, m15 → simplifies to BD
Group 3 (2 cells): m0, m2, m8, m10 → simplifies to B'D'

F (A, B, C, D) = A'B + BD + B'D'
(b) Karnaugh map

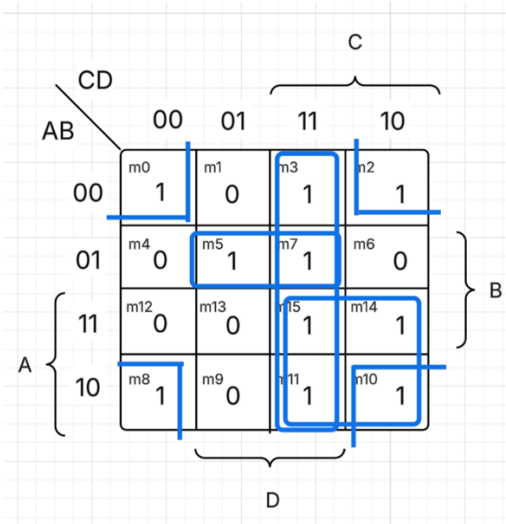

Group 1 (4 cells): m3, m7, m15, m11 → simplifies to CD
Group 3 (4cells): m0, m2, m8, m10 → simplifies to B'D'
Group 3 (4 cells): m15, m14, m11, m10 → simplifies to AC
Group 2 (2 cells): m5, m7 → simplifies to A'BD
F (A, B, C, D) = B'D' + A'BD+ AC+ CD

Q9 (10 Points)

Simplify the following Boolean function using *Karnaugh* map and draw the digital circuit to implement the function using **only NAND** gates:

$$F(A,B,C,D) = \Sigma(0, 1, 2, 3, 6, 10, 11, 14)$$

K-Map for simplification:

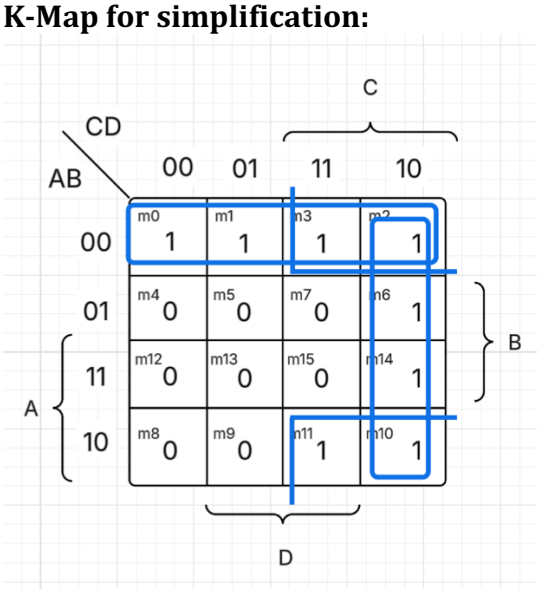

F (A, B, C, D) = A'B'+B'C+CD'

Digital circuit:
NOT gate = NAND gate: A' = A NAND A

AND gate: A . B = (A NAND B) NAND (A NAND B)
OR gate: A + B = (A NAND A) NAND (B NAND B)

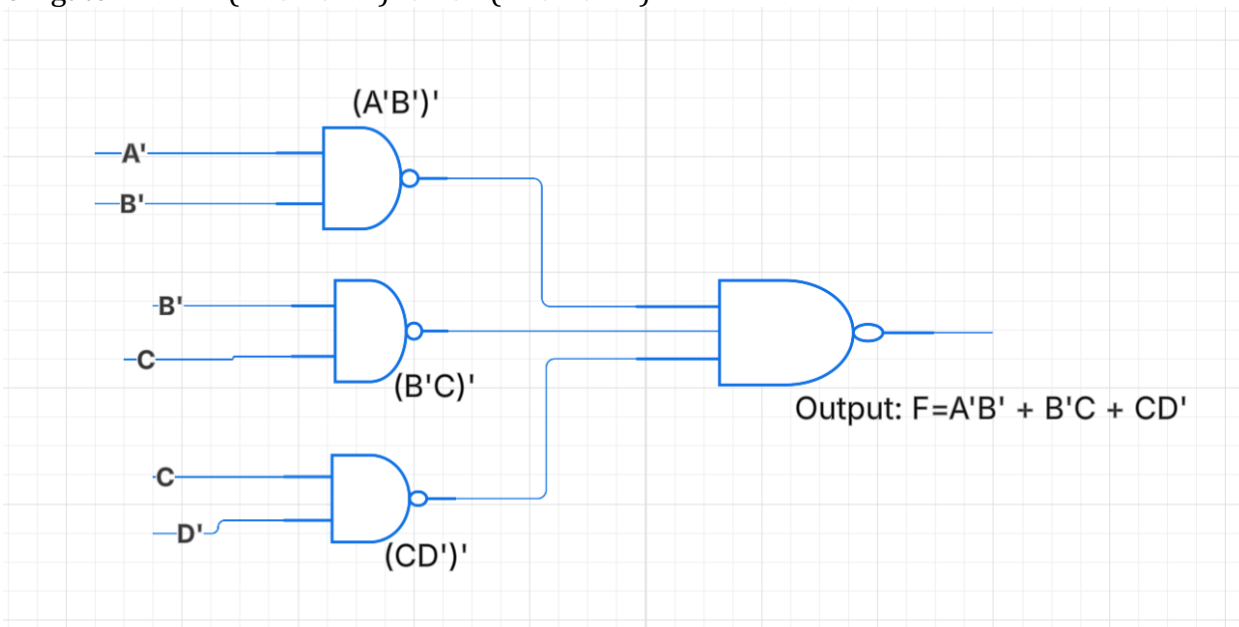

Total: 8 gates

Q10 (10 Points)

Given four binary inputs *ABCD*, design a digital function with an output *Z* where *Z* is only 1 if the decimal value of the 4-bit input is dividable by 3 or by 4 without remainder (*Note: Z* is 1 for input value zero).

a. Provide the truth table for this function.
b. Use Karnaugh map to obtain the minimal sum-of-products Boolean expression of *Z*.

No need to draw the digital circuit of this function.

(a) Truth Table

0	A	B	C	D	Divisible by 3	Divisible by 4	z
0	0	0	0	0	Yes	Yes	1
1	0	0	0	1			0
2	0	0	1	0			0
3	0	0	1	1	Yes		1
4	0	1	0	0		Yes	1
5	0	1	0	1			0
6	0	1	1	0	Yes		1
7	0	1	1	1			0
8	1	0	0	0		Yes	1
9	1	0	0	1	Yes		1
10	1	0	1	0			0
11	1	0	1	1			0

12	1	1	0	0	Yes	Yes	1
13	1	1	0	1			0
14	1	1	1	0			0
15	1	1	1	1	Yes		1

Z=Σm(0, 3, 4, 6, 8, 9, 12, 15)

(b)

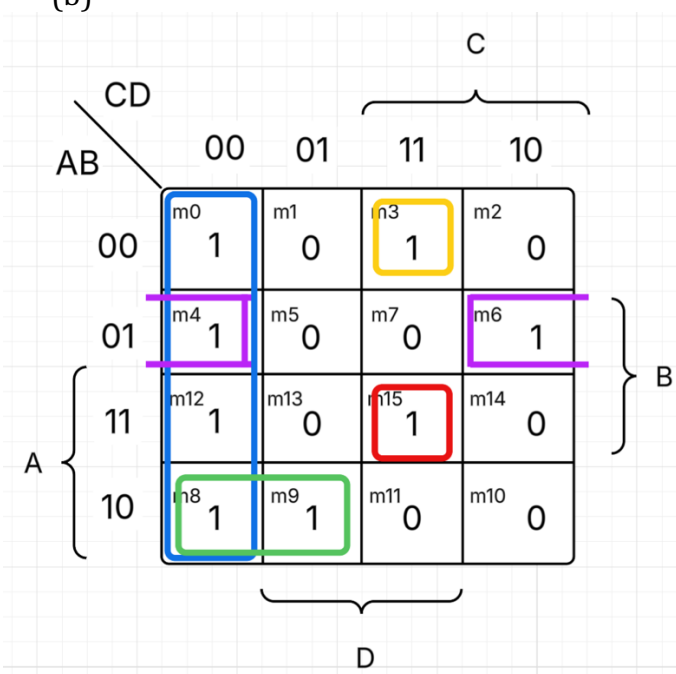

F (A, B, C, D)=C'D' +AB'C'+A'BD'+ A'B'CD+ABCD