Northeastern University
College of Engineering
Department of Electrical & Computer Engineering

EECE2310 – Introduction to Digital Design and Computer Architecture

Homework 2

Submission Instructions

- Homework assignments must be done by each student individually (no groups are allowed).
- For the programming problems (RISC-V assembly):
    1. Your code must be well commented by explaining what the lines of your program do. Have at least one comment for every 4 lines of code.
    2. At the beginning of your source code files (only if a separate source code file is required by the question) write your full name, and NU student ID.
    3. If required by the question, test your code using the RARS assembler.
- For non-programming problems, include explanation of all steps of your answers/calculations not only the final results.
- Submit the following to the homework assignment page on Canvas:
    1. Your homework report developed by a word processor (e.g., Microsoft Word) and submitted as <u>one PDF file</u>. Any handwritten answers will not be accepted. For answers that require drawing of diagrams, one option is to use Lucid (check the *Creating Diagrams with Lucid* document on the Miscellaneous Resources page on Canvas). The report includes the following (depending on the assignment contents):
        a. Answers to the non-programming problems that show all the details of the steps you follow to reach these answers.
        b. A summary of your approach to solving the programming problems.
        c. The screen shots of the sample runs of your programs.
    2. If required by any of the questions, your well-commented programs <u>source code files</u> (i.e., the .asm files).

Do NOT submit any files (e.g., the PDF report file and the programs source code files) as a compressed (zipped) package. Rather, upload each file individually.
Do NOT post solutions to any assignment or projects on public repositories like GitHub. Sharing your work in this way can compromise the learning experience for other students and could be considered academic dishonesty.

- *<u>Note</u>:* You can submit multiple attempts for this homework, however, only what you submit in the last attempt will be graded (i.e., all required reports and files must be included in this last attempt).

Q1 (20 Points)

By using only four *Half Adders* and four *XOR* gates, implement the shown **Abs** combinational circuit that takes a signed 4-bit binary number **X** ($X_3X_2X_1X_0$ represented using 2's complement) as input and outputs **X**'s absolute value **Y** ($Y_3Y_2Y_1Y_0$). (Note: **Y**=**X** if **X** is positive and **Y**= -**X** if **X** is negative). Assume the $X_3X_2X_1X_0$ input is only limited to the range from -7 to +7.

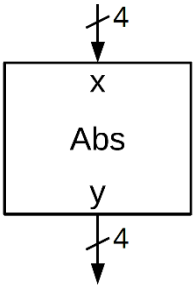

Q2 (15 Points)

Use only one block of a 3 × 8 *Decoder* and three *OR* gates to implement the following three Boolean functions (one circuit to implement all of them):

$$F_1 = x'yz' + xz$$
$$F_2 = xy'z' + x'y$$
$$F_3 = x'y'z' + xy$$

Q3 (20 Points)

Implement the following Boolean function with only one 4 × 1 *Multiplexer*, one *OR* gate, and one *AND* gate.

$$F(A, B, C, D) = \sum m(1, 3, 5, 6, 7, 11, 12, 13, 14, 15)$$

Q4 (25 Points)

By only using the minimum number of *D* Flip Flops and K-maps to find its combinational circuits, design a sequential circuit that implements the shown state diagram. The circuit has a one-bit input and a one-bit output. The binary number on the arrows represents the input value and the binary number inside the state circles represents the output value. You must assign the following 2-bit binary codes to the states: *a*=00, *b*=01, *c*=10, *d*=11.

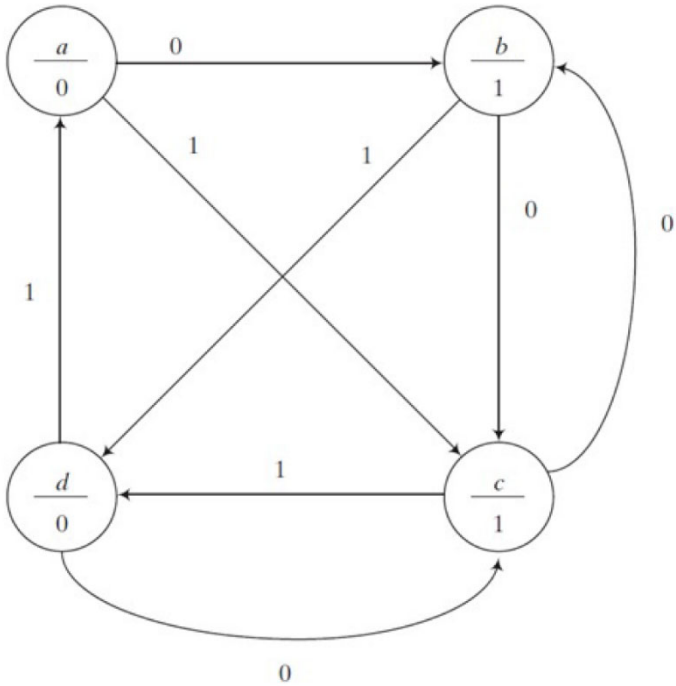

Q5 (20 Points)

The shown sequential circuit has two *D* flip-flops, two 1-bit inputs *x* and *y*, and one 1-bit output *S*. Its next state is determined by a full-adder circuit as shown.

a) Derive the state table and state diagram of the sequential circuit.
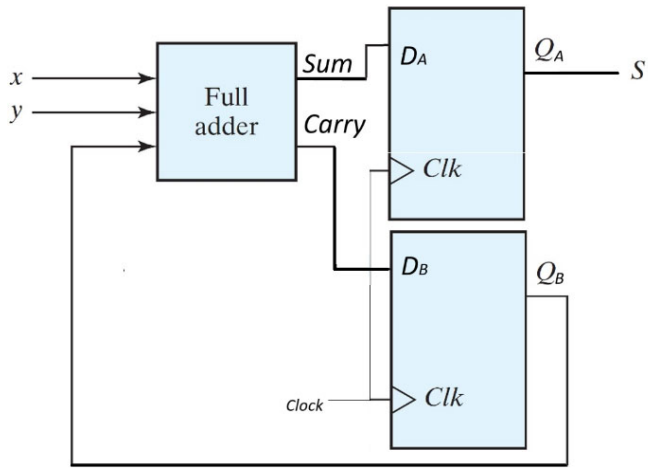
b) What is the maximum size, in bits, of the two integers this circuit can help adding? (i.e., If you want to use this circuit to add two integers, what is the restriction the circuit puts on the size of these integers?).