EECE2311 - Summer 2 2025

Lab for EECE2310: Digital Counters Design

Lab Assignment 5

EECE2311 Lab Section 01

EECE2310 Course Section 01

Student Name(s): Hang Hang

[redacted]

Date Submitted:

07/30/2025

Abstract

This lab implemented digital counter circuits using the DE1-SoC FPGA board and Quartus Prime Lite Software. Various counter designs were implemented, controlled by pushbuttons and switches to toggle an LED, control counter operation, and highlight bi-directional counting and asynchronous value loading. Each design has been validated through the board to verify the correct counter behavior.

Introduction

Counters are fundamental sequential logic components that store and manipulate store and manipulate binary numbers based on clock signals. The goal is to design digital counter circuits of increasing complexity using Intel's LPM_COUNTER IP core within the Quartus software environment on the board. The lab progresses through six assignments: LED toggle (1-bit counter), pushbutton-controlled 4-bit counter, free-running counter with clock division, and fully controlled counter with start/stop, bidirectional, and asynchronous loading capabilities.

The lab assumes familiarity with basic FPGA pin assignment procedures, familiarity with sequential circuit design. The DE1-SoC board's 50MHz system clock requires frequency division to create human-observable counting rates. Expected results include successful toggle behavior, accurate binary counting display, precise 1-second timing intervals through clock division, and reliable switch/pushbutton control of counter operations.

Lab Setup

Pre-Lab

The Intel IP cores offer parameterizable solutions for common arithmetic operations including addition, subtraction, multiplication, division, and comparison functions. The LPM_COUNTER IP core, specifically utilized in this laboratory, is a binary counter capable of generating up and down counters with outputs up to 256 bits wide. Key configurable parameters include counter width (LPM_WIDTH), counting direction (up, down, or bidirectional), counter type (plain binary or modulus), and control inputs such as count enable (cnt_en) and asynchronous load (aload). Clock signals synchronize state transitions, with the DE1-SoC board providing a 50MHz system clock.

Equipment

- **Quartus Prime Lite Software**: used for designing, simulating, and validating digital circuit schematics before FPGA hardware implementation.
- **DE1-SoC FPGA board**: a hardware platform containing the Cyclone V FPGA chip used to physically implement and validate the binary adder/subtractor circuits.
- **USB-B to USB-A Cable:** Used to connect the DE1-SoC FPGA board to the lab PC for programming and data transfer.
- **Power Adapter:** Power the DE1-SoC FPGA board.
- **Lab PC:** Run Quartus software and program the board.

Results and Analysis

Results

Assignment 1: ON/OFF Toggling an LED with a Pushbutton

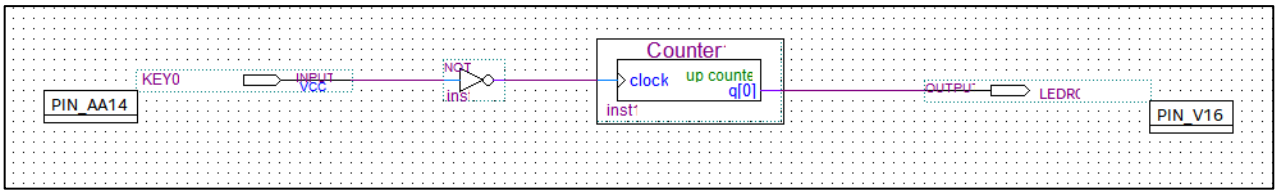

Figure 1: Schematic diagram of LED toggle circuit using a 1-bit LPM_COUNTER. Results (binary count value) are displayed on LEDR[3..0].

Assignment 2: Pushbutton-Controlled 4-bit Counter

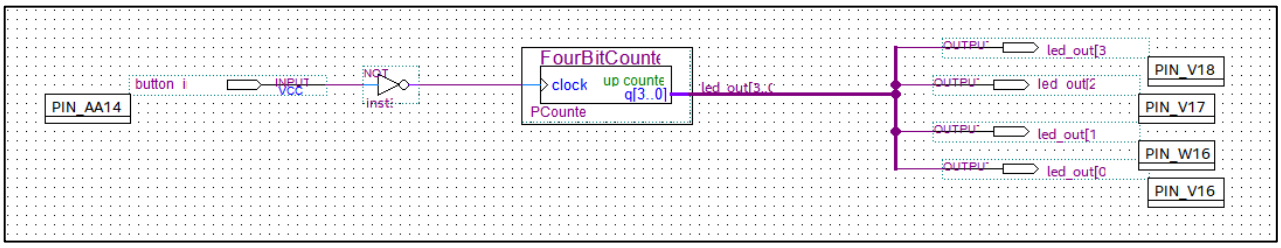

Figure 2: Schematic diagram of 4-bit pushbutton counter incrementing on KEY0 presses, displaying binary on LEDR[3..0].

Assignment 3: Free-Running 4-bit Counter

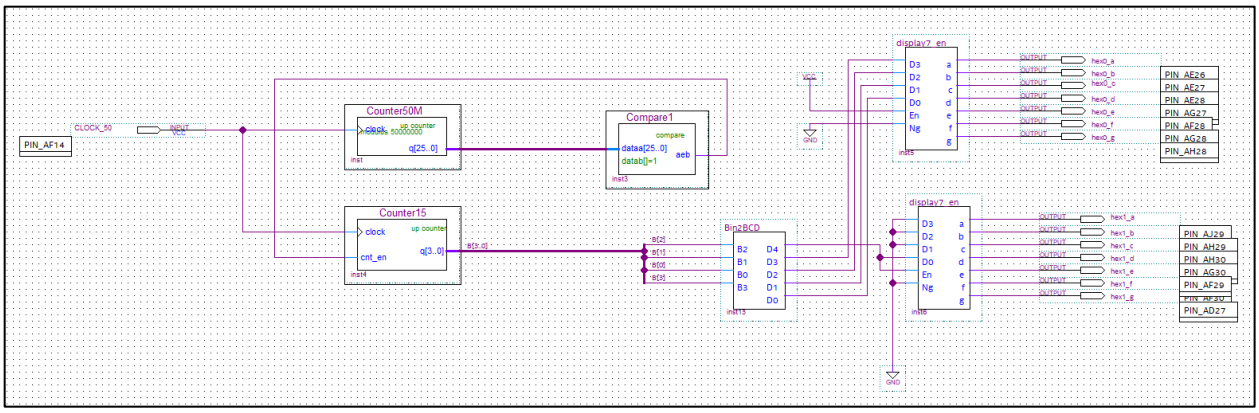

Figure 3: Schematic diagram of a clock-divided free-running counter using cascaded counters and 7-segment display output. Compare1's constant is set to 1.

Assignment 4: Fully Controlled 4-bit Counter (5.1)

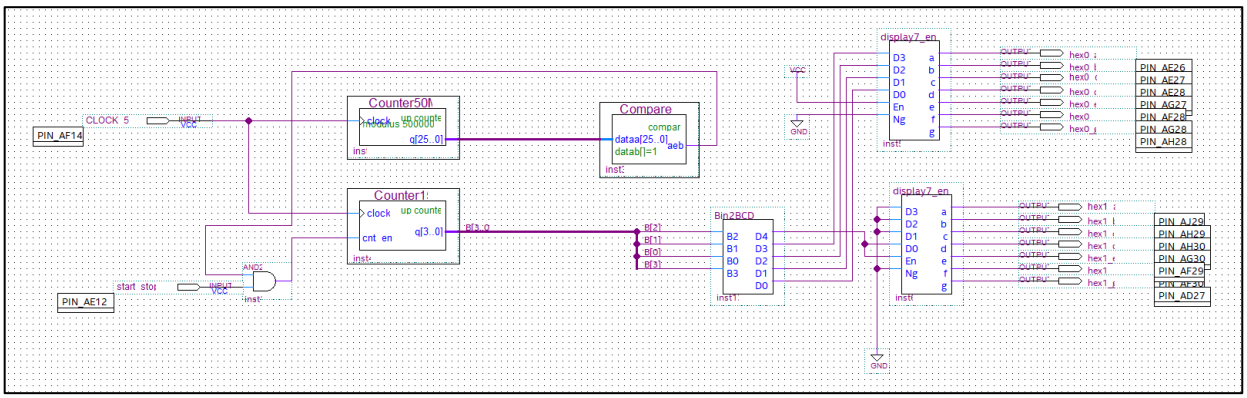

Figure 4: Schematic diagram of a counter that is controlled by pushbuttons and switches. This circuit added a start and stop counting functionality through the AND gate.

Assignment 5: Bi-Directional Counter (5.2)

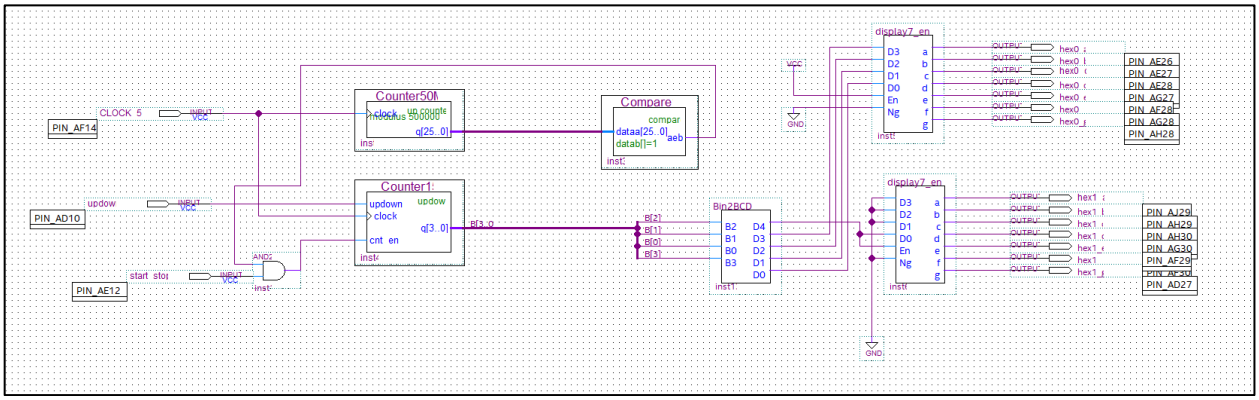

Figure 5: Schematic diagram of a bidirectional counter adding SW[8] up/down control to existing start/stop design.

Assignment 6: Loading the Counter with a Value (5.3)

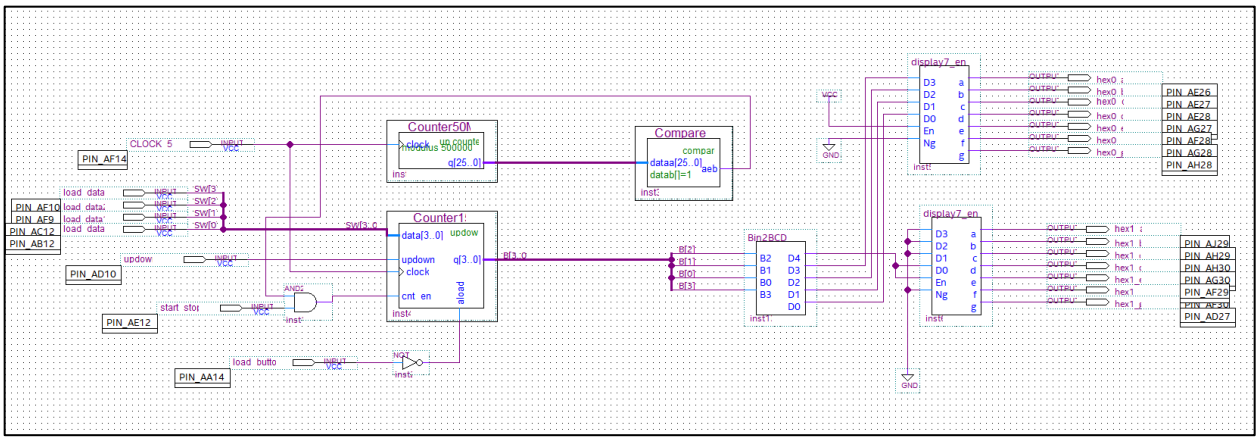

Figure 6: Schematic diagram of a complete counter system with asynchronous loading via KEY0 and SW[3..0] data

Analysis

Assignment 1

The 1-bit counter implementation highlights a toggle functionality which is achieved by exploiting the natural overflow characteristic of a 1-bit counter. When it reaches its max value of 1, it automatically wraps back to 0 on the next clock cycle. The NOT gate is important as DE1-SoC board is active low, so they output logic 0 when pressed. Without the inverter, the LED would be ON when the button is not pressed and OFF when pressed which is counterintuitive. The design proves that each button press generates exactly one rising edge to the counter clock regardless of how long the button is held.

Assignment 2

The 4-bit counter extension visualizes the binary representation through the first four LEDRs. Each KEY[0] press increments the counter by 1 from 0000 to 1111 (0-15 decimal) before rolling over to 0000. The LEDR[3..0] display gives visual feedback of the binary count value. This design uses the same clock triggering mechanism (pushbutton through NOT gate), and proves it works effectively for multi-bit counters.

Assignment 3

The free-running counter implements complex timing concepts through a two-stage clock division. (1) Counter50M acts as a frequency divider, counting 50,000,000 clock cycles (1 sec at 50MHz), (2) Compare1 generates a single enable pulse when Counter50M reaches count value 1. This creates exact 1Hz enable signal for Counter15, as the enable pulse generates only once during each complete counting cycle of Counter50M. For example, if the constant is set to 1, there is only one 1 per counting cycle. The Counter50M requires 26 bits to accommodate the full 50M count range since 2^{25} = 33,554,432 < 50,000,000 < 2^{26} = 67,108,864. **If the Compare1's constant was set to 5 or other integers <=50M, Counter15 would only increment when Counter50M equals 5 (which happens once per second during the count cycle). Hence, the**

counter behavior would remain at 1Hz rather than 5Hz as the constant value determines when during the cycle the enable occurs, not how frequently.

To achieve double speed (2Hz with 0.5 sec intervals), Counter50M's modulus value is reconfigured from 50M to 25M, **causing it to reset every 25M clock cycles**. Therefore, counter50M completes its counting cycle twice as fast, generating enable pulses every 0.5 sec and doubling Counter15's update rate to 2Hz.

Assignment 4

The AND gate creates a logical enable control where Counter15 only receives enable pulses when both Compare1 outputs high AND SW[9] is high. When SW[9] = 1: AND gate passes Compare1 pulses and counter runs. When SW[9] is 0, AND blocks Compare1 pulses and counter stops. There is no clock dependency for start and stop, and counter value is preserved during stop periods.

Assignment 5

The bidirectional counter adds the counting up or down functionality via the LPM_COUNTER IP cores. The Counter15's setting was updated from "Up" to "Up/Down" and then we enabled updown control port option. The added input port component ("updown") of Counter15 connects directly to SW[8], giving immediate direction change. When SW[8]=1, the counter increments (0->1->2->3…->15->0) and when SW[8]=0, counter decrements (15->14->13->12…->0->15). The existing start/stop is still intact, but this new addition contributes to multiple control inputs.

Assignment 6

The asynchronous load functionality is added as a final control mechanism. It enables immediate counter value initialization independent of clock timing. A NOT gate converts the active-low KEY0 signal to an active-high asynchronous load (aload) input, ensuring immediate value loading regardless of the current clock state. This load operation takes priority, temporarily overriding normal counting behavior. This final version of design in this lab offers operators full control over counter initialization, counting direction, and operational state.

Conclusion

This lab successfully highlights increasingly complex digital counter systems using Intel's LPM_COUNTER IP cores. Key achievements including understanding clock frequency division techniques, implementing multiple control mechanisms (e.g., enable, direction, load), and integrating various inputs/outputs interfaces including pushbuttons, switches, LEDs, and 7-segment displays. Future work could explore preset count limits, overflow detection, or creating more sophisticated timing generation circuits.

References

[1] Emad Abella, "Lab 5: Digital Counters Design", Northeastern University, July 2025.

[2] Intel Corporation, "Intel FPGA Integer Arithmetic IP Cores User Guide", October 5th, 2020.