EECE2311 - Summer 2 2025

Lab for EECE2310: Sequential Circuit Design for Railroad Crossing Signal

Lab Assignment 6

EECE2311 Lab Section 01
EECE2310 Course Section 01

Student Name(s): Hang Hang
Student NU ID(s): 002148205

Date Submitted:
08/06/2025

Abstract

This report details the design, implementation, and validation of a finite-state machine (FSM) for controlling a railroad crossing signal on the DE1-SoC platform. The FSM responds to two sensors (SE, SW) and an asynchronous reset (SW[0]), driving a warning lamp in four operational states and correctly handling irregular input sequences. An extra-credit enhancement adds two LEDs that flash alternately at a one-second frequency, utilizing counter modules developed in the prior lab session.

Introduction

Effective warning of an approaching train at a railroad crossing requires rapid, reliable activation of visual signals whenever any track sensor indicates a train's presence. This lab implements a four-state FSM on the board to control a single warning crossing signal based on two binary sensors (SE and SW) and an asynchronous reset. The design ensures correct signal activation in all permitted sensor combinations (SE only, SW only, both) and holds the signal state when inputs change in illegal sequences.

Additionally, an enhancement reuses counter modules from the previous lab to generate two LEDs that flash alternately at a one-second frequency whenever the crossing signal is active. The enhancement reuses existing counter modules—a 26-bit divider, a comparator, and a 1-bit toggle—to generate two alternating 1 Hz signals, which are then gated by the lamp output.

Lab Setup

Pre-Lab

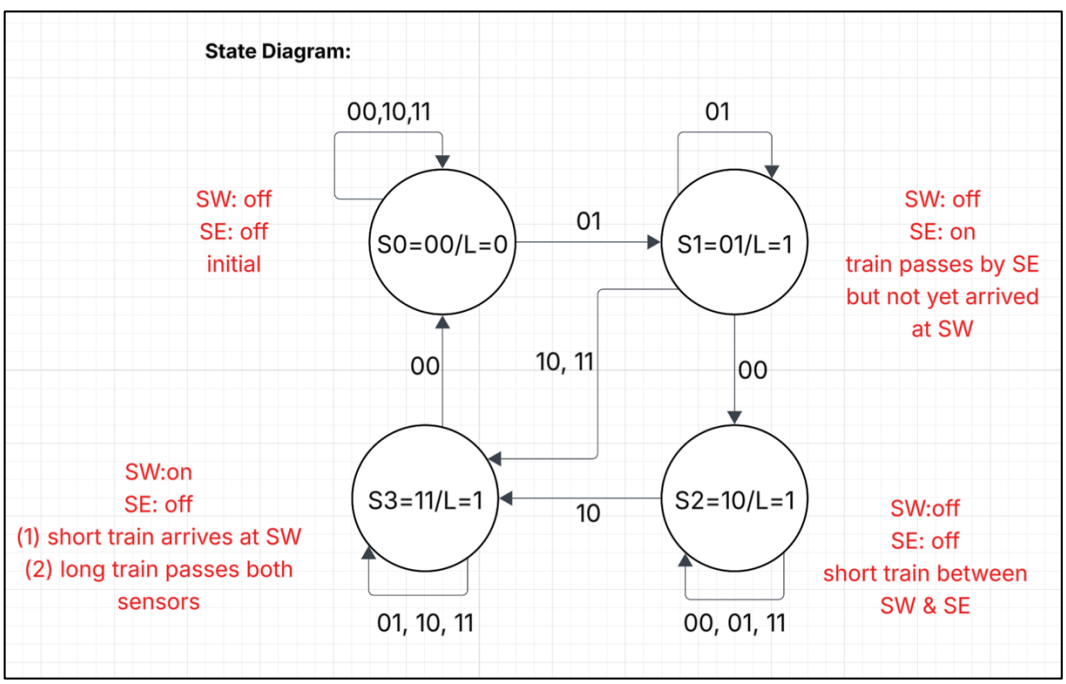

Figure 1: State diagram of the railroad crossing signal system based on the prelab system description.

This might not be required but just thought to discuss a bit here: Why only four states (and why does this design save a flip-flop)?
The FSM design uses four states instead of five by combining states 3 and 4 from the original specifications, as both show identical behavior regarding the next-state transitions. This optimization reduces the required flip-flops from three to two, since two flip-flops can encode up to $2^2 = 4$ states. The states are:

- S0 (00): Initial/idle state - no train present, light off
- S1 (01): Train entering from east - SE active, light on
- S2 (10): Train between sensors - both sensors off, light on
- S3 (11): Train at SW or spanning both sensors - light on

Irregular inputs (violating one-way traffic or back-to-back train constraints) hold the current state.

Equipment

- **Quartus Prime Lite Software**: used for designing, simulating, and validating digital circuit schematics before FPGA hardware implementation.
- **DE1-SoC FPGA board**: a hardware platform containing the Cyclone V FPGA chip used to physically implement and validate the binary adder/subtractor circuits.
- **USB-B to USB-A Cable:** Used to connect the DE1-SoC FPGA board to the lab PC for programming and data transfer.
- **Power Adapter:** Power the DE1-SoC FPGA board.
- **Lab PC:** Run Quartus software and program the board.

Results and Analysis

Results

Assignment 1: Sequential Circuit Implementation

Current State		Inputs		Next State	
Q_A	Q_B	SW	SE	D_A	D_B
0	0	0	0	0	0
0	0	0	1	0	1
0	0	1	0	0	0
0	0	1	1	0	0
0	1	0	0	1	0
0	1	0	1	0	1
0	1	1	0	1	1
0	1	1	1	1	1
1	0	0	0	1	0
1	0	0	1	1	0
1	0	1	0	1	1
1	0	1	1	1	0
1	1	0	0	0	0
1	1	0	1	1	1
1	1	1	0	1	1
1	1	1	1	1	1

Table 1: FSM transition table

QA	QB	Output (light_signal)
0	0	0
0	1	1
1	0	1
1	1	1

Table 2: Output truth table

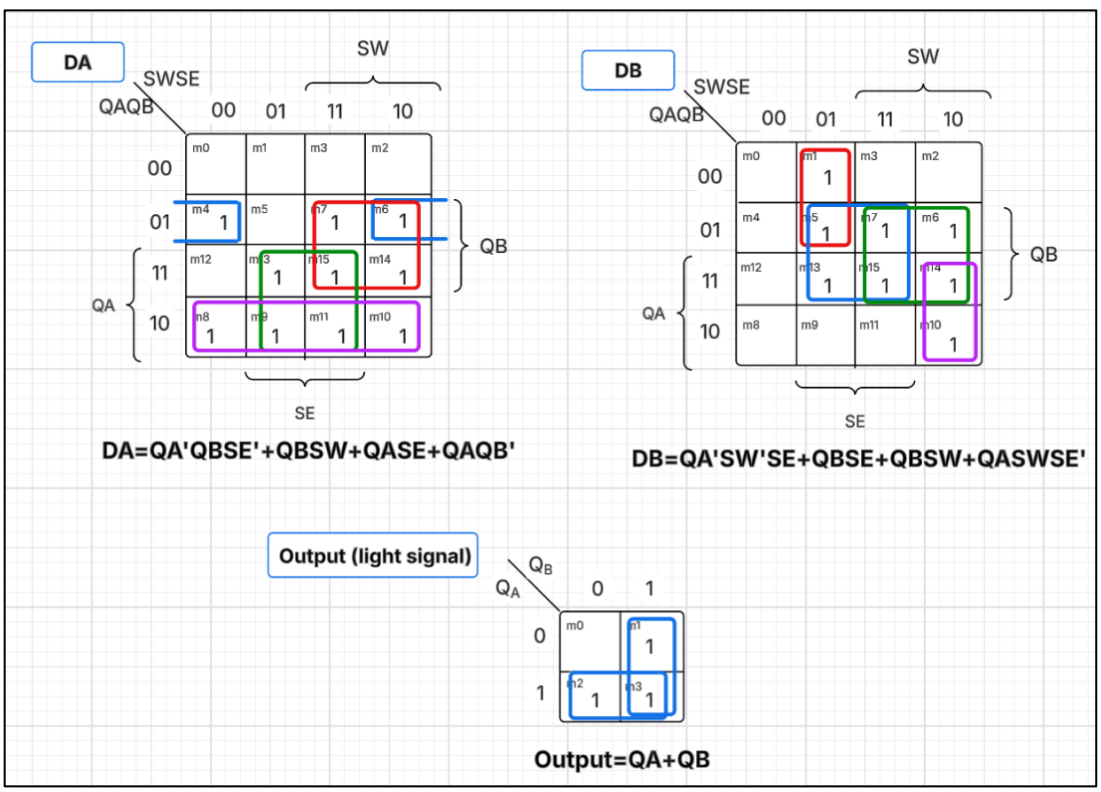

Figure 2: Karnaugh maps for DA and DB outputs based on the above truth table. Output table (not required) also attached.

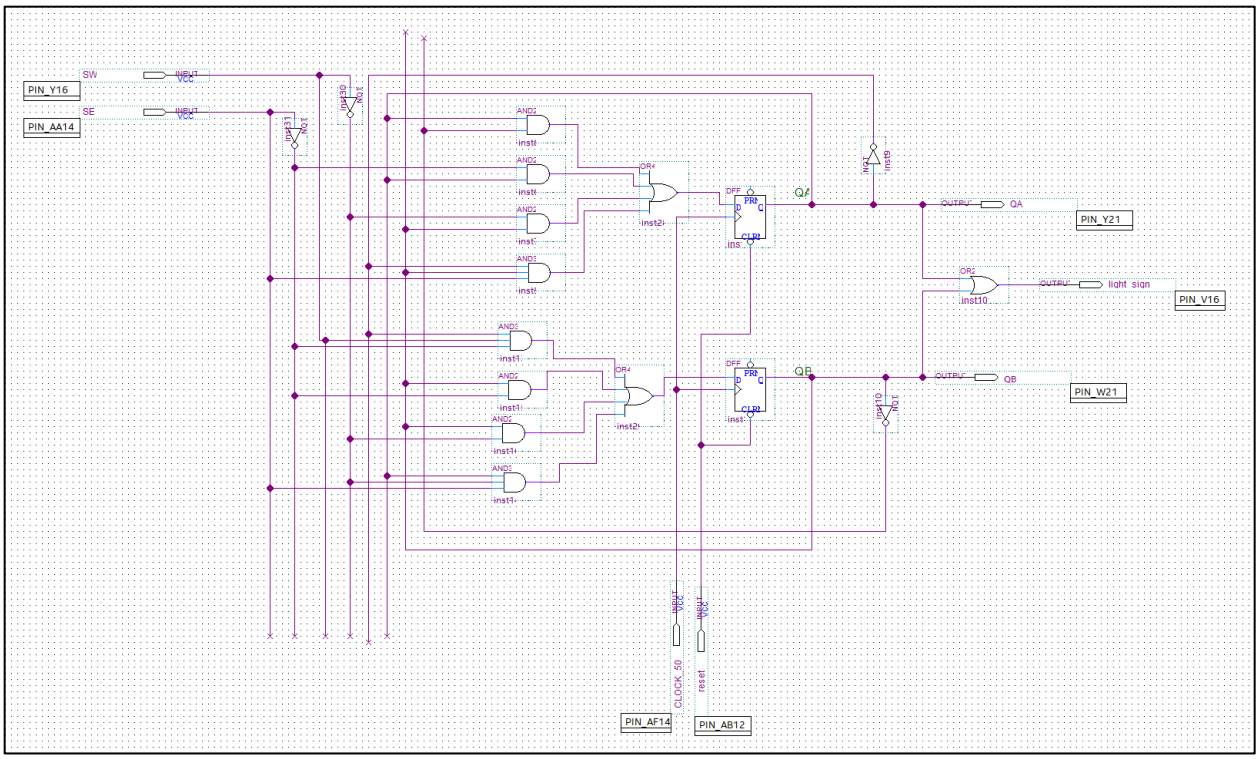

Figure 3: Schematic diagram of railroad crossing signal system based on the pre-lab FSM. The circuit uses two D flip-flops, combinational logic for state transitions, and connects to board I/O (KEY[0], KEY[3], SW[0], LEDR[0]).

Extra Credit Enhancement: Flashing Signals

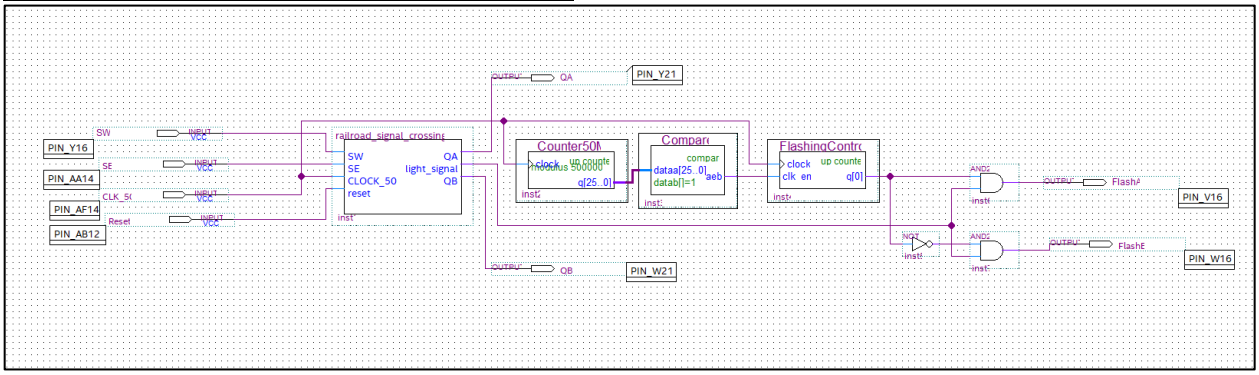

Figure 4: Enhanced schematic with alternating flashing lights. The circuit integrates a 26-bit counter for 1 Hz timing, a toggle flip-flop, and AND gates to create alternating signals on LEDR[0] and LEDR[1].

Analysis

Assignment 1

The railroad-crossing controller is encoded with two D flip-flops with exactly four states - Idle, SE-only, SW-only, and Both. K-map reduction of the transition table yields minimized expressions for DA, DB, and the light output, implemented with minimal AND/OR/NOT logic.

Hardware testing (see 30s demonstration video) confirms that (1) the warning light turns on the moment either sensor is asserted, (2) remains on while any sensor stays high, and (3) turns off only after both sensors return to zero, even when the inputs arrive in an illegal order.

Extra Credit Enhancement: Flashing Crossing Signals

The enhancement adds two LEDs driven by a timing chain built entirely from counters developed in Lab 5. The enhancement incorporates:

- A 26-bit counter + 1bit comparator: divides the 50MHz clock by 2^{26} to generate approx. 0.75Hz signal (50MHz/2^{26} ≈ 0.75Hz --> approx. 1Hz enable signal) and toggles on each 1Hz pulse
- A toggle D flip-flop: changes state every second when enabled
- One NOT and two AND gates: Gate the toggle output and its complement with the main light_signal
- Output mapping for alternating the lights: FlashA (LEDR[0]) = light_signal AND toggle_output, FlashB (LEDR[1]) = light_signal AND NOT(toggle_output)

This gating ensures the LEDs only flash when the crossing signal is active (light_signal=1). When inactive, both LEDs remain off regardless of the toggle state. The NOT gate guarantees mutual exclusivity as exactly one LEDs lights up per cycle when the crossing is active. This circuit separates timing generation from state logic. The FSM controls only the light_signal based on sensor inputs, while the independent timing circuit handles the flash pattern.

Testing confirmed that both LEDs operate synchronously with the main FSM state, turning on/off with the light signal. When the toggle output is HIGH (q[0]=1) and a train is detected (light_signal=1), FlashA illuminates (1 AND 1 = 1) while FlashB remains off (1 AND 0 = 0). After 1 second, the toggle flips to LOW (q[0]=0), causing FlashA to turn off (1 AND 0 = 0) and FlashB to illuminate (1 AND 1 = 1), creating the alternating pattern.

Conclusion

At the system level, this lab highlights that a two-bit FSM, combined with a low-overhead timing chain, is sufficient for dependable control of a railroad crossing signal. From a broader design perspective, the state reduction saves silicon as it eliminates an entire flip-flop and simplified the next-state logic. Future enhancements could add variable flash rates for different warning levels (slower for approaching trains, faster for imminent danger) or synchronized multi-crossing networks where timing modules communicate to coordinate warning patterns across adjacent crossings.

References

[1] Emad Abella, “Lab 5: Sequential Circuit Design for Railroad Crossing Signal”, Northeastern University, August 2025.
[2] Intel Corporation, "Intel FPGA Integer Arithmetic IP Cores User Guide", October 5th, 2020.