ONE PAGE SUMMARY

ASAC 2011
Montreal, Quebec

Hani Safadi
McGill University
Steven Johnson
Temple University
Samer Faraj
McGill University

ORGANIZATIONAL IDENTIFICATION IN ONLINE COMMUNITIES

Organizational identification is an important concept in organization science. This paper explores the validity of organization identity in the context of online communities rather than traditional organizations. We study a sample of 60 online communities that discuss technology-related topics. Our results suggest that just as in traditional organizations, in online communities an environment that promotes good communication between community members contributes positively to organizational identification. Moreover, since relations in an online community are formed almost extensively via online communication, organizational learning capacities of its members influence their organizational identification. Finally, we find that community size and activity are positively related to organizational identification.

ASAC 2011
Montreal, Quebec

Hani Safadi
McGill University
Steven Johnson
Temple University
Samer Faraj
McGill University

ORGANIZATIONAL IDENTIFICATION IN ONLINE COMMUNITIES

Organizational identification is an important concept in organization science. This paper explores the validity of organization identity in the context of online communities rather than traditional organizations. We study a sample of 60 online communities that discuss technology-related topics. Our results suggest that just as in traditional organizations, in online communities an environment that promotes good communication between community members contributes positively to organizational identification. Moreover, since relations in an online community are formed almost extensively via online communication, organizational learning capacities of its members influence their organizational identification. Finally, we find that community size and activity are positively related to organizational identification.

Introduction

Online communities formed by volunteer members who collaborate over the Internet are gathering much attention and research. The phenomenon is not new but has grown unprecedentedly in term of the number of people participating in online communities and the tasks performed in these communities. Indeed, the online communities and other type of social media are experiencing exponential growth (Boyd & Ellison, 2008). Compared to formal organizations, online groups appear as anarchic collections of individuals largely devoid of formal authority. Yet online groups develop strong group norms, successfully generate information goods, and satisfy member needs (Johnson, 2008). From this perspective, professional interactions in online communities are comparable to those of traditional organizations.

Many researchers have studied different aspects of online communities. Some scholars argue that such forms of collaboration are radically changing human societies and the global economy. As an example, in his book "The World is Flat" (Friedman, 2006), Friedman evangelizes for a new world where the speed of communication will alter the common practices of production and consumption. Friedman's arguments center on the role of IT in facilitating communication and synchronizing job processes. Among the several "flatteners" discussed in the book, Friedman considers online communities that allow people to collaborate and upload content the most disruptive (Friedman, 2006, p.125):

> "Uploading, by individuals or communities, is already a huge flattener. It is spreading because the flat-world platform that makes it possible is spreading and because uploading responds to a very deep human longing for individuals to participate and make their voices heard … People like to upload, and that is why of all the ten forces flattening the world, uploading has the potential to be the most disruptive."

Other popular essays have focused exclusively on online communities and online collaboration. In "Wikinomics" (Tapscott & Williams, 2006), the authors focus on business applications of mass-collaboration. The traditional business model assumed that organizations hire individuals to perform tasks that support the company business. On the other hand, mass-collaboration relies on voluntary participation of individuals in order to perform certain tasks or to create new ideas. Companies that can tap into mass collaboration can have a huge advantage because of the reduced cost of manpower and also because of the decreasing cost of creating and maintaining such collaboration networks. As an example, the authors cite Second Life, an online virtual world where users create most of the artifacts. Another book, "The Wealth of Networks" (Benkler, 2006), argues that the social and business structure provided by online communication challenge the traditional view that hierarchical organizations and markets are the most efficient arrangements for doing business and economic transactions.

Shifting our attention to academic literature, researchers have studied various aspects of online communities including the outcomes and the determinants of success in online communities (Cothrel, 2000), community leadership (Johnson, 2008; Kudaravalli, Faraj, & Wasko, 2007), the patterns of participation including lurking (Mason, 1999; Nonnecke & Preece, 2000), the motivation to contribution (Bateman, Gray, & Butler, 2010; Rashid et al., 2006; Yeow, Johnson, & Faraj, 2006), and the categorization of online communities (Porter, 2004).

This paper contributes in studying understudied topic of organizational identification in online communities. Within this vast amount of research on online communities organizational identification has not been looked at. The focus of study on organizational identification has been the context of traditional organizations (c.f. (Smidts, Pruyn, & Van Riel, 2001)). We study whether this concept extends to online communities. We start our discussion by defining online communities and organizational identification. Next we review relevant literature and introduce our theoretical model. Finally, we present our methodology and results.

What are online communities?

There are a multitude of research terminology and definitions for online communities. These include: electronic groups, online communities, virtual communities, electronic communities of practice, online social structures, asynchronous learning networks, online interaction spaces, electronic networks of practice, and knowledge networks (Johnson & Faraj, 2006). In this paper we will be using the term online communities as defined in (Johnson & Faraj, 2006, p. 4):

> Online communities are voluntary collectives of individuals that meet the following criteria:
>
> 1. participants share common interests,
> 2. community interaction is predominantly or exclusively online and asynchronous,
> 3. community membership is voluntary, unrestricted, and open-ended,
> 4. participation is clearly visible, allowing individuals to accurately identify participation status, and
> 5. the collective is recognized as a community by outside observer

Organizational Identification

In this paper, we focus on organizational identification in the context of online communities. Organizational identification is traditionally defined as the "cognition of membership of a group and the

value and emotional significance attached to this membership" (Tajfel, 1978). Another definition comes from (Pratt, 1998) as the congruence between the values of the individual and those of the organization that he belongs to. Organizational identification is important as it leads to better member productivity and more interest in the well being of the organization (Smidts, et al., 2001). Social identification is also an antecedent to trust and loyalty to the community are affected by (Ashforth & Mael, 1989). Previous research shows that good communication climate between management and employees improves organizational identification (Smidts, et al., 2001). Moreover, the quality of information communicated in term of its sufficiency and usefulness positively affects the communication climate leading to better organizational identification.

Literature Review and Theoretical Model

Participating in online communities entails performing cognitive tasks requiring interactions with other individuals online. To succeed, an individual who joins a new online community has to learn the norms of communication in the community (Butler, Smith, & Turner, 2004).

Organizational learning is identified as an important concept in this context. Organizational learning refers to the ability of individuals to acquire practices that help them perform their tasks in a certain organizational context. Previous research has dimensionalized organizational learning to know-what and know-how learning (Tucker, Nembhard, & Edmondson, 2007).

Know-what learning is the capability of new members to identify best practices in the online community (Tucker, et al., 2007), whereas know-how learning measures the ability of the members to apply these practices in order to perform different tasks within the community (Majchrzak, Malhotra, & John, 2005).

Both know-what and know-how learning are required for individuals collaborating over distributed networks. We have already seen that good communication is an essential component of organizational identification. Since organizational learning forms the essential requirement of a meaningful communication within the community and because online communities lack the traditional mechanisms such as meetings and face-to-face communication to form organizational ties, we propose that organizational learning in the form of both know-what and know-how is as antecedent to organizational identification.

Hypothesis 1: *increased know-what and know-how capacities of a community's members is associated with higher levels of organizational identification of the members in the community.*

We have identified organizational learning capacity as a relevant determinant of organizational identification through good communication in online communities. However, good communication requires a medium that promotes it. The concept of psychological safety is relevant in this context. Psychological safety is the individual belief that the online community is a safe place to share ideas and exchange experiences. It reflects the mutual respect, trust and comfort of communication within the community (Edmonson, 1999). Psychological safety, therefore, leads to a better quality of communication in the community.

Wiesenfeld et al. (1998) found that in the context of virtual organizations, virtual workers' strength of identification with the organization depends on the frequency of their electronic communication with other organization members. "Communication can strengthen member identification because it provides organization members with an opportunity to create and share their subjective perceptions of the organization's defining features – its norms, values and culture. Knowledge of these facets of the organization creates a sense of shared meaning among employees … communication [also]

strengthens employees' organizational identification is by providing workers with a feeling of ownership in the shared meaning that has been created because they feel that they have helped develop it" (p. 1).

Because psychological safety leads to better communication and since trust is a common denominator of safety and organizational identification, we propose that psychological safety is an antecedent to organizational identification.

Hypothesis 2*: increased psychological safety in the community is associated with higher levels of organizational identification.*

The previous two hypotheses established organizational learning capacity and psychological safety as determinants to organizational identification. These two determinants are, however, related. In online communities, interaction between members is carried almost exclusively over the Internet except in exceptional communities where members have face-face or voice communication. Therefore, the communication patterns dictate the community's environment and define members' perceptions of safety as a result. Following this discussion, we propose that both know-what and know-how learning capacities affect psychological safety in the community.

Hypothesis 3*: know-what and know-how learning capacities are antecedents to psychological safety.*

Figure 1 summarizes our theoretical model. Psychological safety as stated in the model mediates the relationship between the two knowledge capacity constructs (know-what and know-how) and organizational identification. Depending on the effect size of the relationship between knowledge constructs and organizational identification, the role of psychological safety as a full vs. a partial mediator is determined. Because know-what and know-how are closely related constructs, we proposed that they are correlated in the model.

Hypothesis 4*: psychological safety mediates the effect of know-what and know-how learning capacities on organizational identification.*

FIGURE 1

Theoretical model

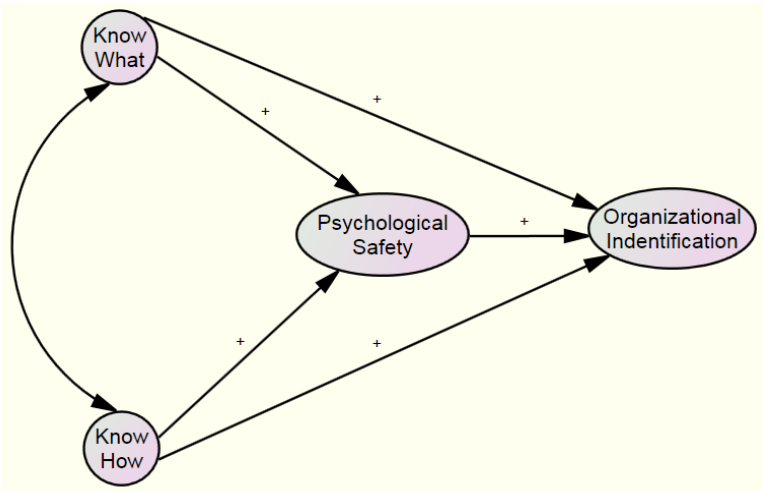

So far we have looked at the relations between the three concepts of organizational learning, psychological safety and organizational identification within the communities. Previous research tells us that community characteristics influence relations within communities. Butler (2001) suggests that larger communities have higher level of turnover although they attract more members. Higher level of turnover in larger communities suggest they are less cohesive than smaller online communities. This is consistent with the idea that the atmosphere of larger online communities is either more hostile or less attractive to new members. Thus, we propose:

Hypothesis 5*: community size negatively affects psychological safety.*
Hypothesis 6*: community size negatively affects organizational identification.*

Johnson (2006) suggests that the number of active online community members positively affects participation intentions. We adapt this proposition and suggest that the increased participation intentions in its turn positively affect psychological safety and organizational identification because of its positive effect of the communication climate in the community:

Hypothesis 7*: increased community activity is positively associated with psychological safety.*
Hypothesis 8*: increased community activity is positively associated organizational identification.*

Methodology

Instrument

We have adapted previously established instruments to operationalize the theoretical constructs of the theoretical model:

1. Organizational identification is measured with the instrument adapted from Schmidts et al. (2001)
    - ORGID1 I feel strong ties with this online group
    - ORGID2 I experience a strong sense of belonging to this online group
    - ORGID3 I feel proud to belong to this online group
    - ORGID4 I am sufficiently acknowledged in this online group
    - ORGID5 I am glad to be a member of this online group
2. Organizational learning capacity (know-what and know-how): we used Tucker, Nembhard, and Edmondson (2007)'s definition of "know-what" and Majchrzak, Malhotra, and John (2005)'s definition of "know-how"
    - KNWHAT1 I use the group to identify best practices
    - KNWHAT2 I use the group to see how other people do things
    - KNWHAT3 I use the group to generate ideas
    - KNHOW1 I use the group to find out how to apply a new idea
    - KNHOW2 I use the group to be more effective
    - KNHOW3 I use the group to learn how to do things
3. Psychological safety is measured with an adapted version of team psychological safety measures of Tucker, Nembhard and Edmondson (2007), a shortened version of Edmondson's (1999) measures.

- PSYSAFE1 Members of this online group are comfortable checking with each other if they have questions about the right way to do something
- PSYSAFE2 The members of this online group value others' unique skills and talents
- PSYSAFE3 Members of this online group are able to bring up problems and tough issues.

Data Collection

We have used survey data collected by Johnson (2008). Johnson (2008) surveyed online communities engaged in asynchronous communication about complex information-intensive topic. The survey focused on communities about technology topics in order to maintain internal validity yet ensured enough variation among them to maintain generalizability. The survey procedure is fully described in (Johnson, 2008, p. 50). Table 1 summarizes the characteristics of the surveyed communities including the community's name, the number of member who responded to the survey, the number of posts, the number of members, and the number of forums in the community at the time of the survey.

TABLE 1

Characteristics of surveyed online groups

Group	Number of survey respondents	Number of group posts	Number of group members	Number of group forums
ACRE	19	405985	50027	61
ACTS	27	717816	68895	39
AGW	37	814584	4844	16
ALLNT	1	19811	30152	9
AXIM	27	1578930	218552	58
BHAUS	16	41763	20044	16
BLEND	25	1098879	33028	29
BREWQ	21	61239	16754	31
BTECH	6	1644497	30317	11
CMFAM	9	.	.	.
CODEF	14	665957	59453	40
CPANEL	3	348288	103583	1
DANGER	20	.	342	30
DEVONE	25	12086	17005	8
DEVX	17	437849	33974	22
DOOM	23	1048125	135919	44
FLASH	12	70435	322	7
FRUGAL	19	1498061	19554	70
GEAR	20	1235727	16997	22
GEEKST	10	1948	17612	55
GRAPH	3	263609	4501	22
GREY	21	386748	11987	45
HOSTR	0	100568	66	37

Group	Number of survey respondents	Number of group posts	Number of group members	Number of group forums
ICRON	5	601705	22342	36
IROSE	9	108361	14102	40
JONNY	27	37687	1941	18
KIRU	17	1971398	113055	30
LAKE	24	73554	16227	21
LGSOFT	8	11305	17141	34
MACOS X	2	527174	105947	164
MACRU M	19	5275750	182002	60
MMOCC	20	116500	3757	40
NORTH	27	.	.	40
NOTEB	19	.	.	.
NSIDE	18	79500	1441	5
OSNN	11	631862	102477	29
PCPER	21	4040237	101143	54
PEPPER	19	6634	1163	7
PSOFT	18	124663	16085	17
QPEN	5	2229	11481	20
RAILB	2	101945	297	15
RCGR	16	9502856	207442	841
RPGH	1	131958	4592	66
SCRAP	6	95739	9709	14
SIGNS	13	339282	10188	58
SPEED	9	1959285	74203	42
SRVR	8	7751	2697	74
STEAM	7	3592431	201212	228
SWEET	10	.	.	35
SWORD	6	3972	387	11
TALKF	9	.	.	.
TECHP	5	.	.	.
TREOC	7	1308763	123123	57
UGOPL	13	1541890	76781	21
VBULLS	3	.	.	.
VDEP	19	3876	18	73
VJFORM	28	192668	8095	35
VWNAV I	17	25782	2454	40
WBICY	5	7925	4172	83
WINX	20	47763	8705	49
XBOX	2	30488	255	82
XMODS	2	48408	12445	50

Model Development and Hypothesis Testing

We used structural equation modeling (Bollen, 1989; Schumacker & Lomax, 2004) with AMOS (Arbuckle, Wothke, & Inc, 1999; Byrne, 2001) in order to develop the measurement and structural model. An advantage of structural equation modeling is that the two models (i.e. measurement and structural) can be evaluated simultaneously. Moreover, because various communities were surveyed we had to analyze within groups and between groups effects in order to make sure that our conclusions generalize across communities.

In this section we describe the various analyses that we performed and how we developed our model. We start by a confirmatory factor analysis to validate the measurement model. We test differences among groups in term of the correlation structure and the means of latent variables. We then test the theoretical model and evaluate the proposed hypothesis. All of these analyses are within-group analyses that use individual survey responses. Finally, we perform a between-group analysis by testing the interaction between group-level characteristics on the individual-level characteristics.

Confirmatory Factor Analysis

Step 1

The first step in the analysis is to perform a confirmatory factor analysis. This analysis helps in clarifying the concepts we are studying (i.e. latent variables) and their relationships with other latent variables and the observed variables (i.e. indicators). The first step consists of testing the loading of the observed variables on the constructs as specified in the reviewed literature. Therefore, we test the loadings of the different responses on the corresponding constructs of Know-How, Know-What, Psychological Safety and Organizational Identification.

We also want to test whether the covariance structure is the same among all groups. In order to verify that there is no difference among groups in terms of factor loadings and paths coefficients we constrained these estimates to be equal among all groups.

In order to get an identifiable model in structural equation modeling and to avoid singular covariance matrices, the number of observations should be at least one more the number of indicator variables. Because we have 14 indicators (3 Know-How, 3 Know-What, 3 Psychological Safety, and 5 Organizational Identification) we have eliminated communities that have less than 15 respondents.

Results of evaluating the model (Figure 2) show good fit (χ^2/df=1.63<2, AGFI=.497, RMESA = .037) which confirms that the communities share similar covariance structures with equal estimates (i.e. corresponding loadings and covariances are equal among groups). We notice, however, that two latent variables (Know-What and Know-How) are highly correlated (0.96) with high factor loadings. This suggests that these two latent variables are representing essentially the same construct. In the next step we test this assumption.

FIGURE 2

Confirmatory factor analysis – step 1

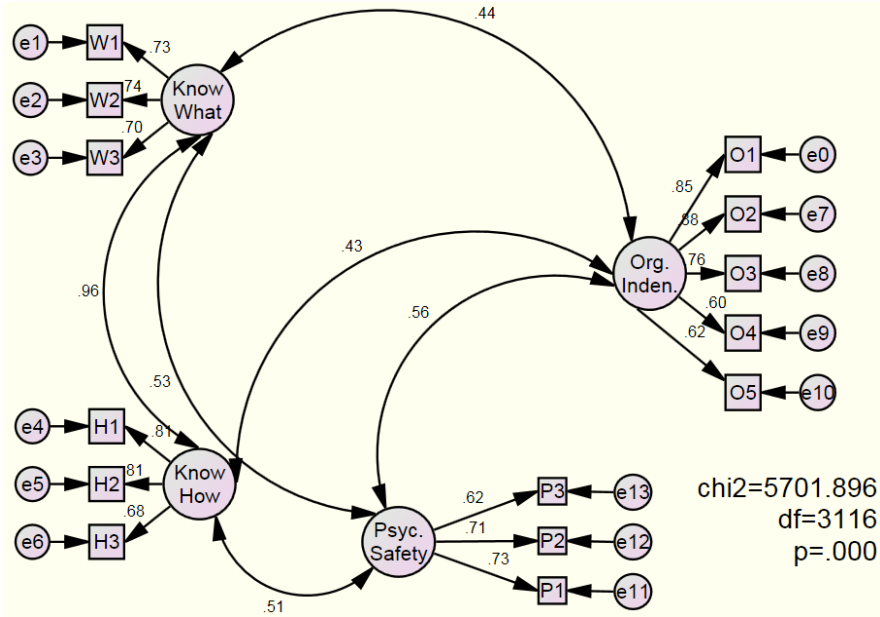

Step 2

In this step we test the factor model where one latent variable (need for knowledge) substitutes the Know-What and Know-How latent variables. Six indicators load on this latent variable. Results show good fit (χ^2/df=1.83<2, AGFI=.497, RMESA=.037 in both) with significant paths coefficients (Figure 3). In addition, performing a χ^2 difference test between this model and the previous one we got: $\Delta\chi^2$=4.737 and Δdf=3 which indicate no significant difference between the two models. In addition, all paths coefficients are statistically significant. Therefore, we drop one latent variable and let the six knowledge indicators load on a single latent variable that we call "organizational learning".

FIGURE 3

Confirmatory factor analysis – step 2

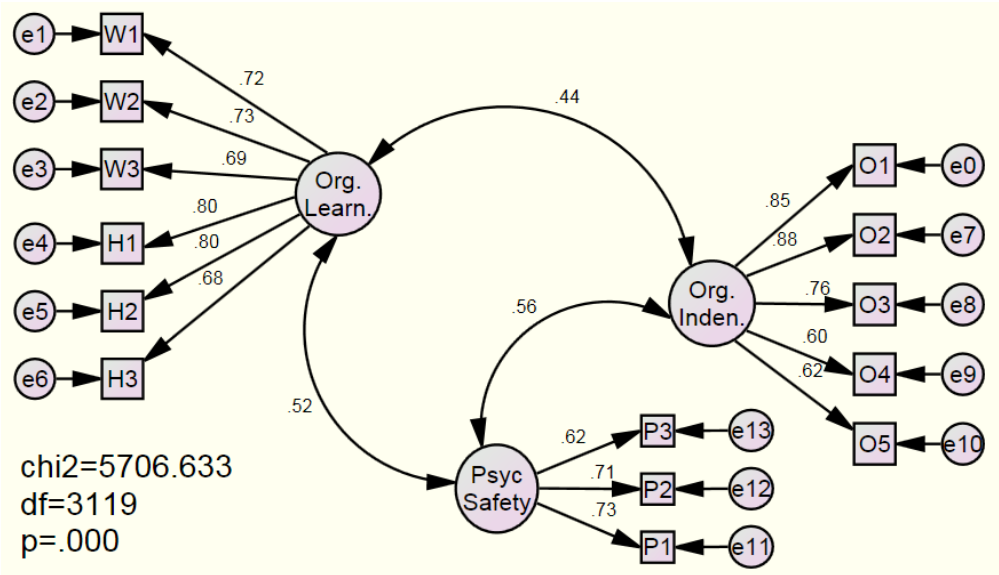

Step 3

So far we only looked at the covariance structure, but we are also interested to test whether any difference between groups in term of means of latent variables exists. In this step, we perform a model comparison between the full model, in which latent variables are allowed to have different means among groups, and the equal means model where means of latent variables are restricted to be equal among groups. As indicated in AMOS manual (Arbuckle, et al., 1999) we restrict the intercepts of all indicators as well.

Both full and nested models have good fit (χ^2/df<2, RMESA≈.037). In addition, looking at the nested model comparison test we see that $\Delta\chi^2$=308.3 and Δdf=87 which indicated a significant difference between the two specifications. Compared to the full model, the equal means model is significantly different. We conclude therefore that means of latent variables are not equal among groups. Furthermore, by looking at the scatter plot of the means (Figure 4), we cannot notice any relationship between the means of different variable inside each group, or any relationship between the mean of the same variable across groups. Therefore, to explain the difference in means we have to look at group-level characteristics.

FIGURE 4

Means of Latent Variables

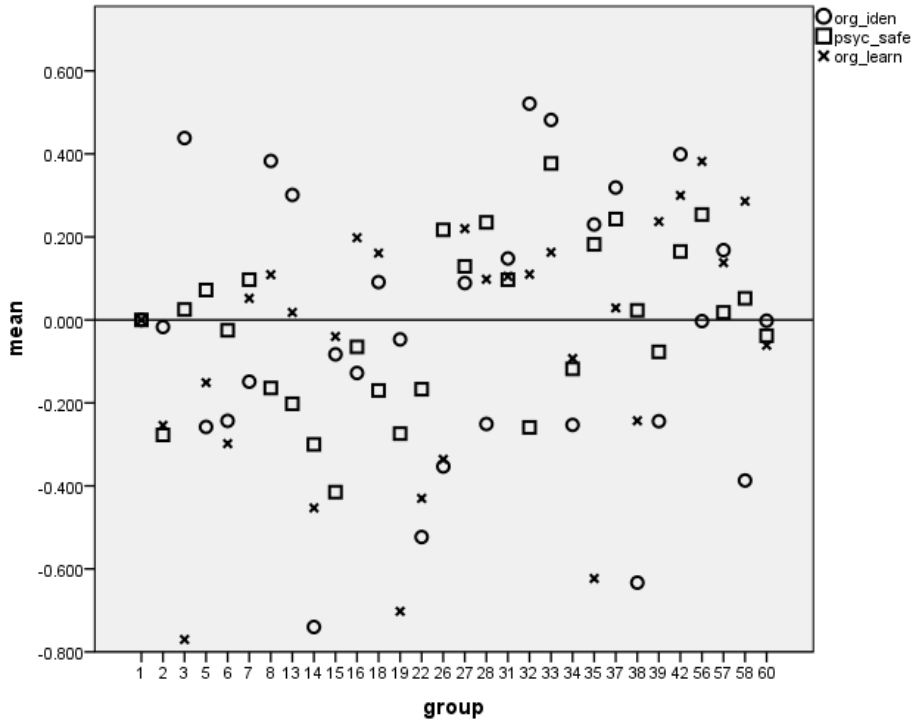

This analysis indicates that structured differences exist between groups. We should look at how group characteristics affect the three latent variables: organizational learning, psychological safety and organizational identification. The last analysis will serve this purpose.

Conclusion of Confirmatory Analysis

The result of the confirmatory analysis indicates good fit and loadings of the survey results (indicator variables) on the theoretical constructs (latent variables). The result of the first and the second analyses allowed us to refine the theoretical model and drop one of the two knowledge latent variables because of its high correlation with the other one. In addition to that, the within and between-groups tests indicate that the covariance structure is shared among all groups, whereas means differ between groups.

These results confirm the results reported in (Johnson, 2008) where this dataset was tested using hierarchal linear modeling (HLM) to test a related theoretical model and Intraclass correlation (ICC) scores to confirm differences among communities. In structural equation modeling the measurement and the structural models are evaluated at the same time. The robustness of our results is increased by finding complementary results through a different statistical method.

Testing the Theoretical Model

In this section we develop and test the theoretical model of this paper. As explained previously, we are interested in examining organizational identification in online communities in terms of other individual and group level characteristics such as organizational learning capacity and psychological safety. Therefore, we postulate a direct influence on organizational identification from both organizational learning capacity and psychological safety.

The confirmatory factor analysis indicates a correlation between organizational learning and psychological safety. However, as explained in the review section, psychological safety is a construct that depends on the interaction of individuals in the community. Therefore, we postulate that organizational learning is an antecedent to psychological safety. This is represented by a direct influence from organizational learning to psychological safety in the model.

When evaluating this theoretical model we would like first to know whether psychological safety mediates the relationship between organizational learning and organizational identification. We would like to test whether this mediation relationship is a complete or a partial mediation. In order to do so, we create a nested model in AMOS constraining the effect organizational learning on organizational identification to be zero. If a significant difference exists between the full model and the restricted model in term of fit then the proposed constrained is rejected mediation relationship is partial.

The results show good fit for both the full and the restricted models (χ^2/df<2, AGFI≈.499, RMESA≈.037). In addition all paths coefficients are significant (Figure 5). In term of model comparison between the full model and the restricted model, the difference in χ^2 is 14.8 with 1 degree of freedom. This implies that the hypothesis that the added constrained is insignificant is rejected. Therefore, organizational learning directly organizational identification and the mediation relationship is partial.

In summary, the results confirm hypothesis 1, hypothesis 2, and hypothesis 3 with the caveat that know-what and know-how are regarded as the single construct of organizational learning capacity. Hypothesis 4 is partially supported as the results indicate that psychological safety is a partial mediator between organizational learning and organizational identification.

Cross-Level Interaction

The last analysis is to test the effects of community-level characteristics on the within-group constructs. In order to do so we perform a multivariate multiple regression between group-level indicators and the means of within-group constructs. The means at the group level from step 3 of the confirmatory factor analysis. The independent variables are the number of posts per member in each group as a

measure of group activity, and the logarithm[1] of the number of forums in each group to represent the group size and the diversity of communication in the group. The model is tested with AMOS and the results are indicated in Figure 6. Maximum likelihood estimation of missing data is employed in the analysis.

The evaluation shows good fit (χ^2/df=.754<2, RMESA≈0) and the squared multiple correlations show that 9% of the variance in psychological safety, 25% of the variance in organizational identification, and 34% of the variance in organizational learning is explained by the group-level indicators. However, half of the path coefficients are insignificant (dashed lines in Figure 6) which limits our ability to fully confirm or disconfirm the hypotheses 5 to 8. The significant path estimates are the effect of number of posts/member on organizational identification which has a positive standardized value of 0.32 (marginally significant at p=0.061), the effect of the number of forums on organizational learning (0.59), and the effect of the number of forums on organizational identification (0.34).The results allow us to confirm hypothesis 8 and to reject hypothesis 6.

FIGURE 5

Theoretical model evaluation

[1] The logarithm is taken to make the scale compatible across variables given that the #forums is much bigger than the #post/member and have few large outliers.

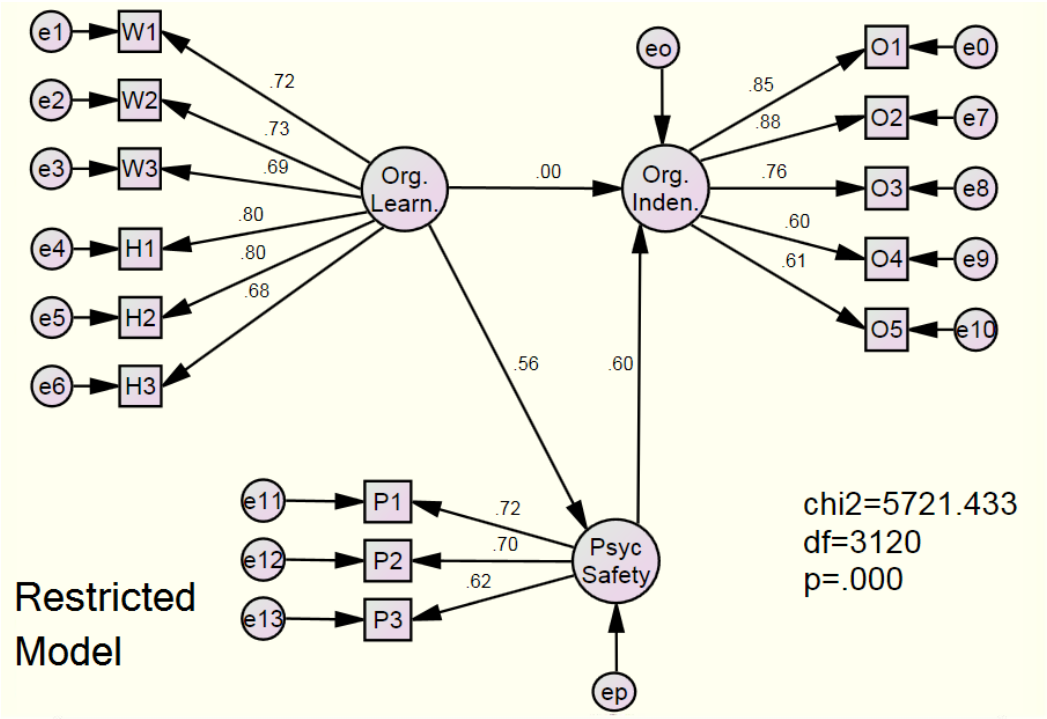
e1
W1
e2
W2
e3
W3
e4
H1
e5
H2
e6
H3
.72
.73
.69
.80
.80
.68
Org. Learn.
.00
eo
Org. Inden.
.85
.88
.76
.60
.61
O1
O2
O3
O4
O5
e0
e7
e8
e9
e10
.56
.60
e11
P1
e12
P2
e13
P3
.72
.70
.62
Psyc Safety
ep
chi2=5721.433
df=3120
p=.000
Restricted Model

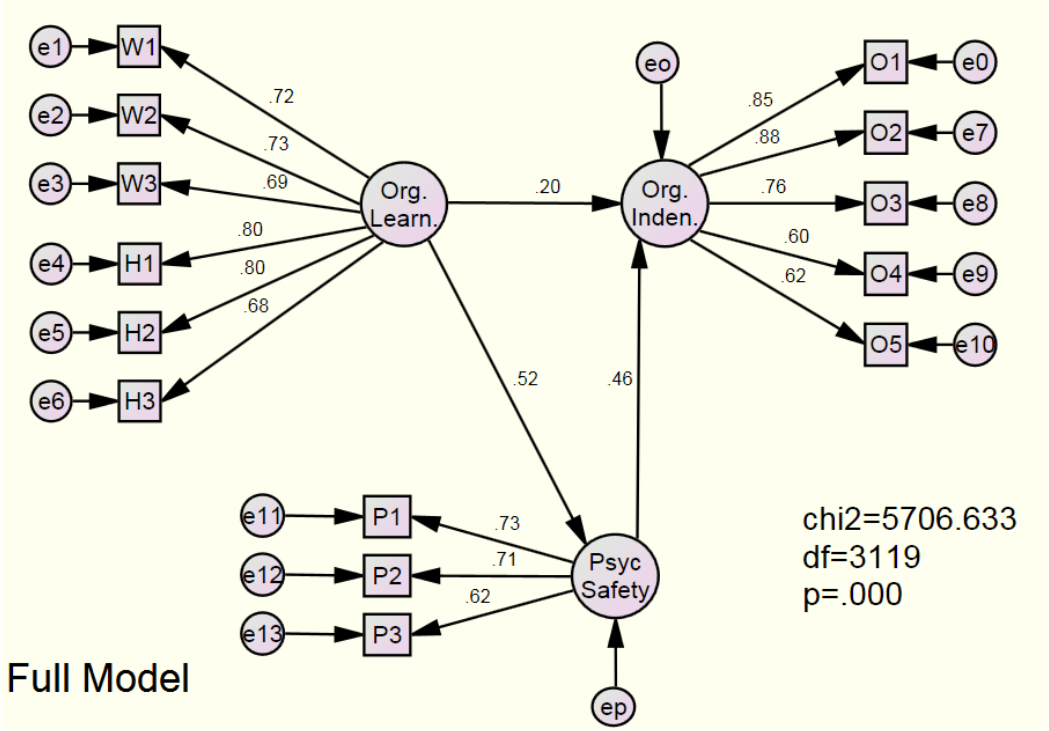
e1
W1
e2
W2
e3
W3
e4
H1
e5
H2
e6
H3
.72
.73
.69
.80
.80
.68
Org. Learn.
.20
eo
Org. Inden.
.85
.88
.76
.60
.62
O1
O2
O3
O4
O5
e0
e7
e8
e9
e10
.52
.46
e11
P1
e12
P2
e13
P3
.73
.71
.62
Psyc Safety
ep
chi2=5706.633
df=3119
p=.000
Full Model

FIGURE 6

Cross-level interaction

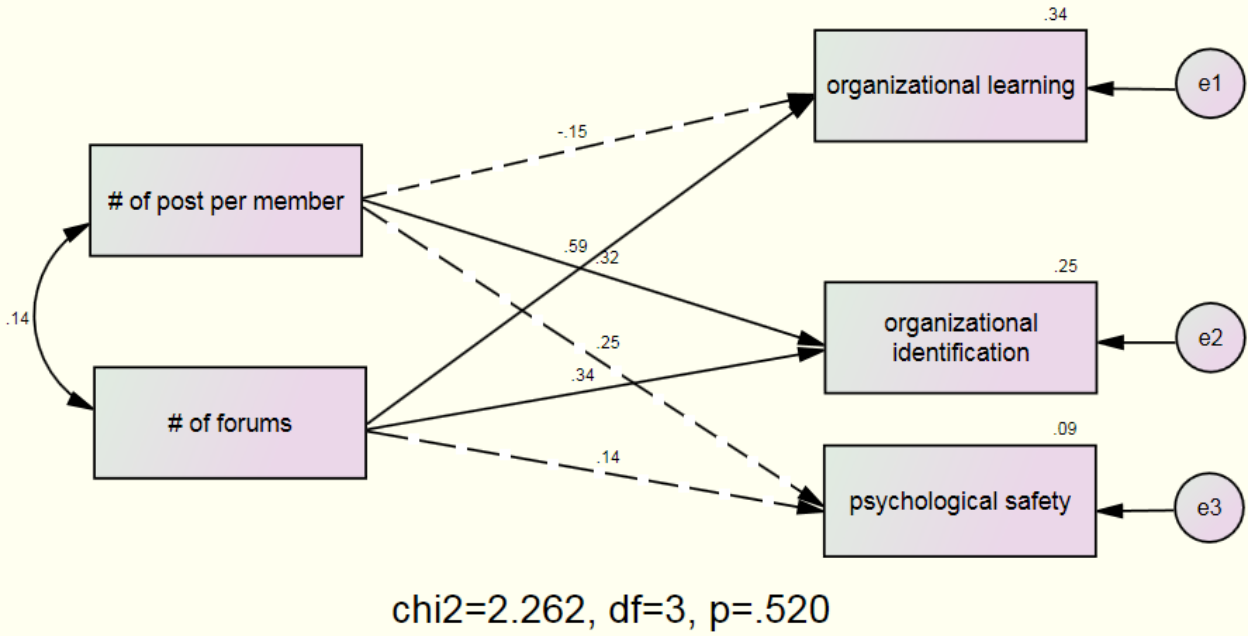

One problem of this analysis is its reliance on objective indicators such as number of posts and members to approximate the group level characteristics. For example, a large community may have a lot of short posts with little information while a small one may have fewer posts but more substantial content. Even more important is that the number of members in a community does not faithfully reflect the number of its active members which is the group-level concept that the literature describes. Notwithstanding these limitations, we think that rejecting hypothesis 6 is interesting as literature indicates a negative effect of community size on the quality of communication in online communities.

Conclusion

Organizational identification is an important concept studied in organization science. This paper explored the validity of this concept in the context of online communities rather than traditional organizations. The results suggest that like in traditional organizations, an environment that promotes good communication between community members is essential for their organizational identification with the community. Moreover, since relations in an online community are formed almost extensively via online communication, organizational learning capacities of the members largely influence their organizational identification. Finally, community size and community activity positively affect organizational identification. More work is required to obtain valid community-level indicators that would help us in analyzing cross-level interactions between community-level characteristics and the three individual-level constructs of organizational identification, organizational learning, and psychological safety.

References

Arbuckle, J., Wothke, W., & Inc, S. (1999). *Amos 4.0 user's guide*: Marketing Department, SPSS Inc.

Ashforth, B. E., & Mael, F. (1989). Social Identity Theory and the Organization. *The Academy of Management Review, 14*(1), 20-39.

Bateman, P. J., Gray, P. H., & Butler, B. S. (2010). The Impact of Community Commitment on Participation in Online Communities. *Information Systems Research*.

Benkler, Y. (2006). *The Wealth of Networks: How Social Production Transforms Markets and Freedom*. New Haven: Yale University Press

Bollen, K. (1989). Structural equations with latent variables. 1989. *NY: John Wiley & Sons*.

Boyd, D., & Ellison, N. (2008). Social network sites: Definition, history, and scholarship. *Journal of Computer Mediated Communication, 13*(1), 210-230.

Butler, B. S. (2001). Membership size, communication activity, and sustainability: A resource-based model of online social structures. *Information Systems Research, 12*(4), 346-362.

Butler, B. S., Smith, M. A., & Turner, T. C. (2004). *Connectivity vs. coherence: Boundary tensions in online technical discussion communities*. Paper presented at the Academy of Management.

Byrne, B. (2001). Structural equation modeling with AMOS: Basic concepts. *Applications, and Programming, Mahwah, New Jersey*.

Cothrel, J. P. (2000). Measuring the success of an online community [Research article]. *Strategy and Leadership, 28*(2), 17-21.

Edmonson, A. (1999). Psychological safety and learning behavior in work teams. *Administrative Science Quarterly, 44*(2), 350-353.

Friedman, T. (2006). *The world is flat: A brief history of the twenty-first century*: Farrar Straus & Giroux.

Johnson, S. L. (2006). *A social identity model of leadership effectiveness in electronic knowledge networks*. Paper presented at the Academy of Management Annual Meeting.

Johnson, S. L. (2008). *Impact of leadership on continued participation in online groups.* Unpublished Unpublished dissertation, U. of Maryland, College Park, MD.

Johnson, S. L., & Faraj, S. (2006). *Joining the crowd: Determinants of electronic knowledge network membership size*.Unpublished manuscript, College Park, Md.

Kudaravalli, S., Faraj, S., & Wasko, M. (2007). *Is Knowledge Power? A Study of Leadership and Influence in Electronic Networks*. Paper presented at the Academy of Management Annual Meeting.

Majchrzak, A., Malhotra, A., & John, R. (2005). Perceived Individual Collaboration Know-How Development Through Information Technology–Enabled Contextualization: Evidence from Distributed Teams. *Information systems research, 16*(1), 9-27.

Mason, B. (1999). *Issues in virtual ethnography.* Paper presented at the Proc. Ethnographic Studies in Real and Virtual Environments: Inhabited Information Spaces and Connected Communities Conf., Edinburgh.

Nonnecke, B., & Preece, J. (2000). *Lurker demographics: Counting the silent.* Paper presented at the ACM CHI 2000 Conference on Human Factors, The Hague.

Porter, C. E. (2004). A typology of virtual communities: A multi-disciplinary foundation for future research. *Journal of Computer-Mediated Communication, 10*(1), article 3.

Pratt, M. G. (1998). *To be or not to be: Central questions in organizational identification*: Sage Publications, Inc.

Rashid, A. M., Ling, K., Tassone, R. D., Resnick, P., Kraut, R., & Riedl, J. (2006). *Motivating participation by displaying the value of contribution.* Paper presented at the Proceedings of the SIGCHI conference on Human Factors in computing systems, New York, New York.

Schumacker, R., & Lomax, R. (2004). *A beginner's guide to structural equation modeling*: Lawrence Erlbaum.

Smidts, A., Pruyn, A., & Van Riel, C. (2001). The impact of employee communication and perceived external prestige on organizational identification. *Academy of Management Journal, 44*(5), 1051-1062.

Tajfel, H. (1978). *Differentiation between social groups: Studies in the social psychology of intergroup relations*: Academic Press.

Tapscott, D., & Williams, A. D. (2006). *Wikinomics: How Mass Collaboration Changes Everything*. New York, New York: Portfolio.

Tucker, A. L., Nembhard, I. M., & Edmondson, A. C. (2007). Implementing new practices: An empirical study of organizational learning in hospital intensive care units. *Management Science, 53*(6), 894-907.

Wiesenfeld, B. M., Raghuram, S., & Garud, R. (1998). Communication patterns as determinants of organizational identification in a virtual organization. *Journal of Computer Mediated Communication, 3*(4), 0-0.

Yeow, A., Johnson, S. L., & Faraj, S. (2006). *Lurking: Legitimate or illegimate peripheral participation?* Paper presented at the Twenty-seventh International Conference on Information Systems, Milwaukee, Wis.