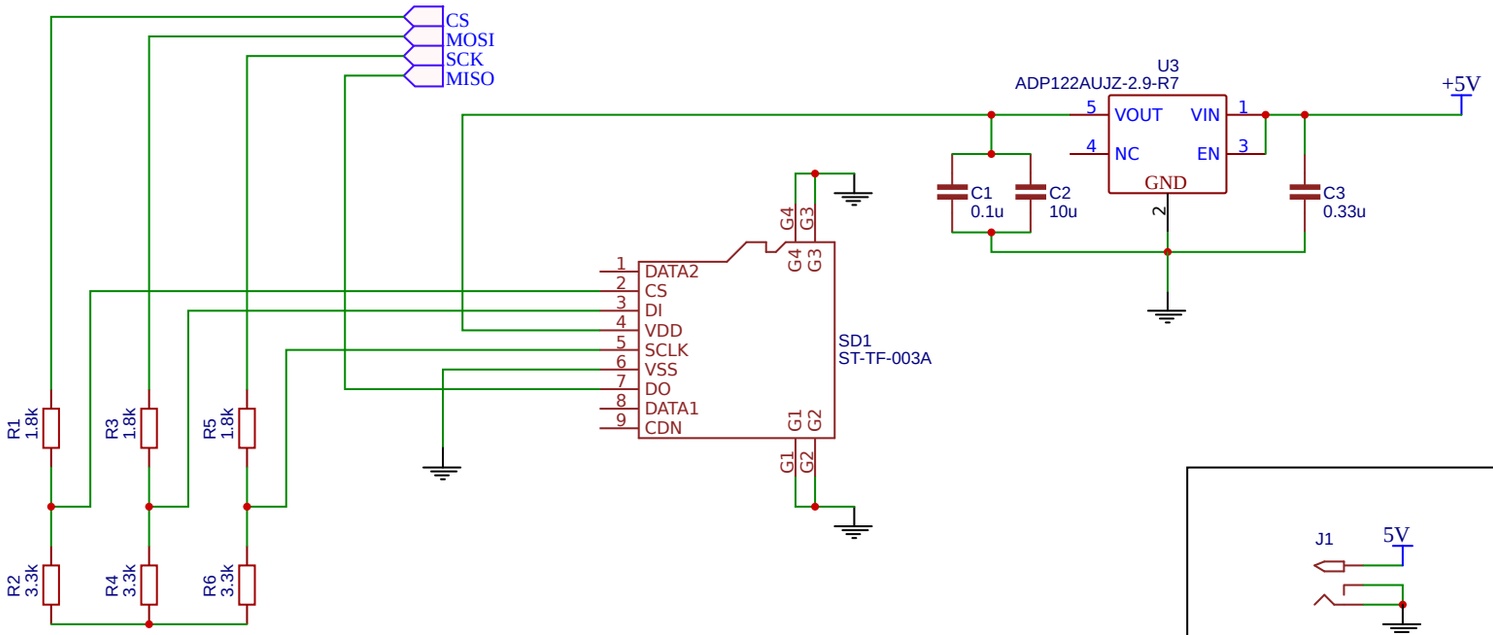

SD card

Power: 5V

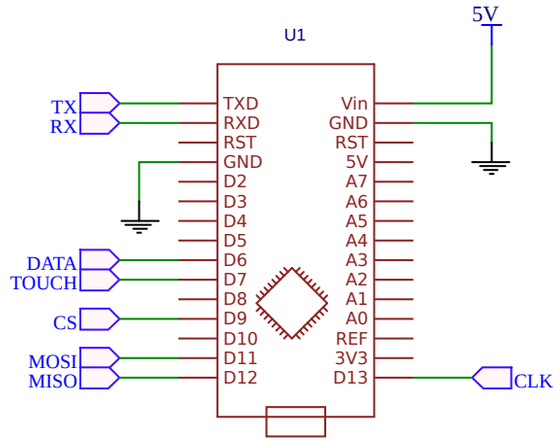

Arduino Nano

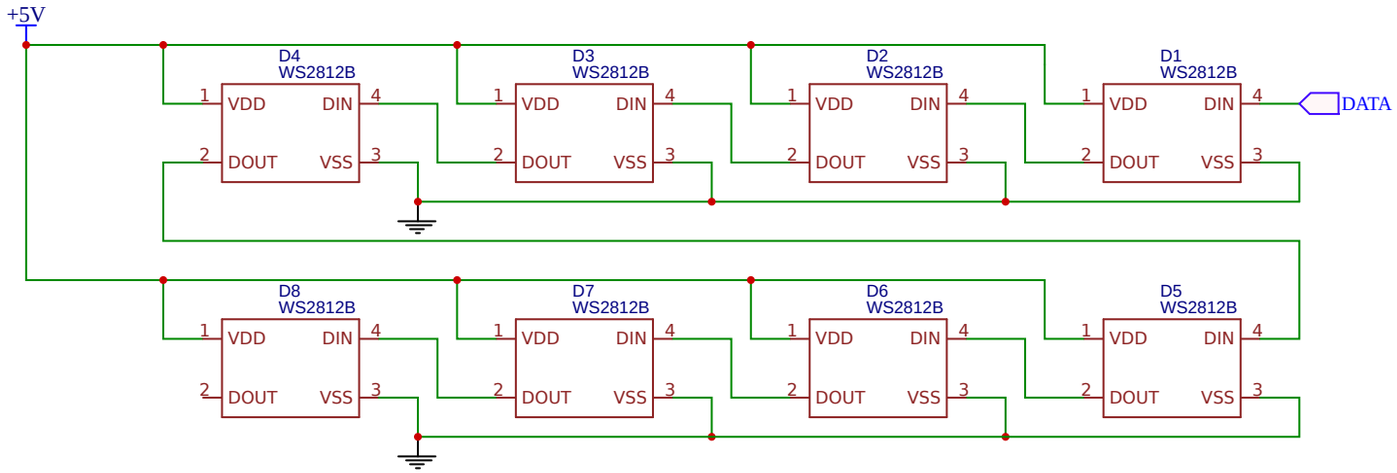

RGB LED: WS2812B

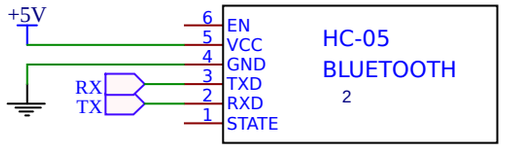

HC05 Bluetooth

TITLE: MyPixelStick Nano -- 3DLab project	REV: 1.0
Date: 2017-12-23	Sheet: 1/1
EASYEDA V4.11.9	Drawn By: Hankso