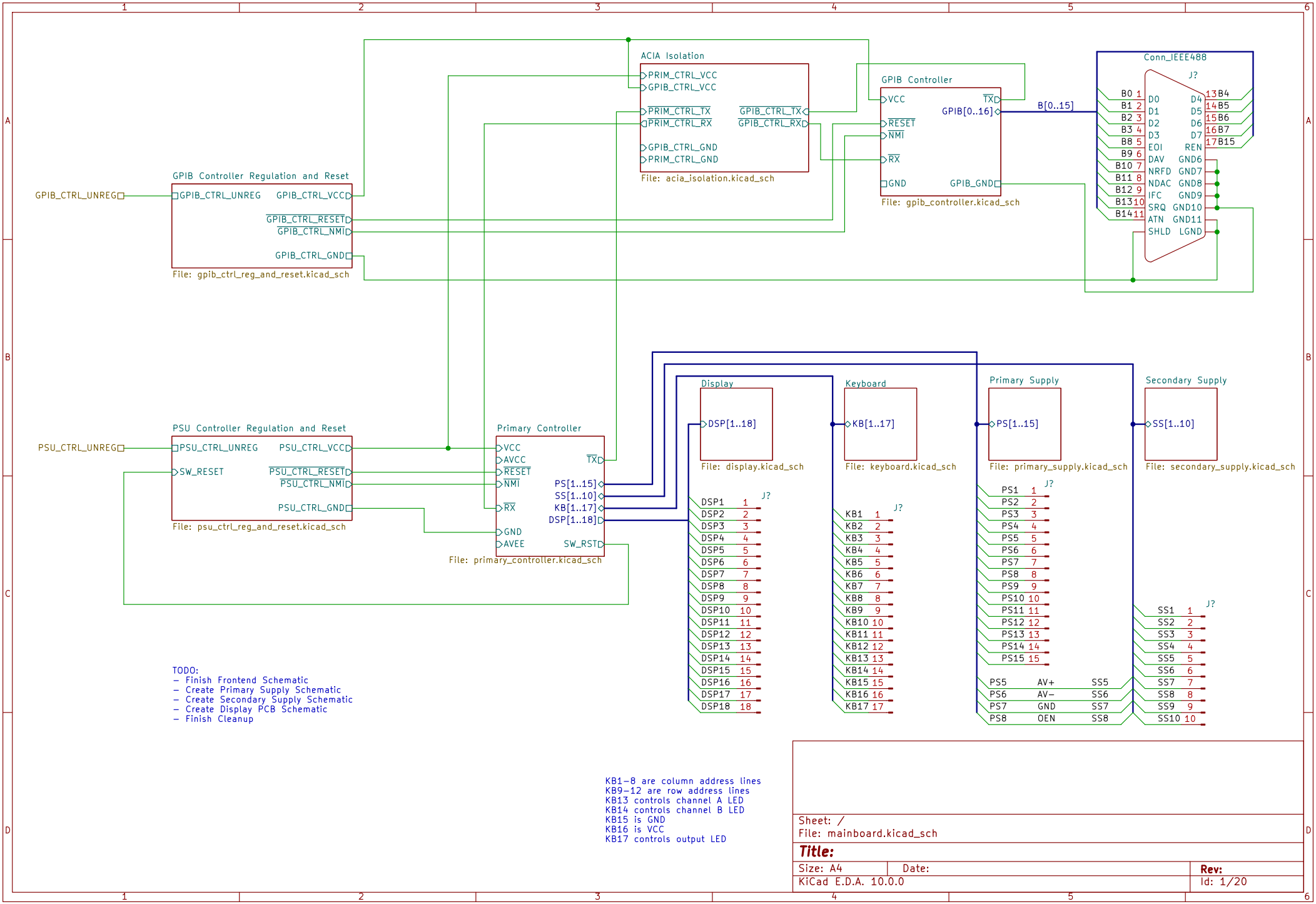

Sheet: /
File: mainboard.kicad_sch

Title:

Size: A4	Date:	Rev:
KiCad E.D.A. 10.0.0		Id: 1/20

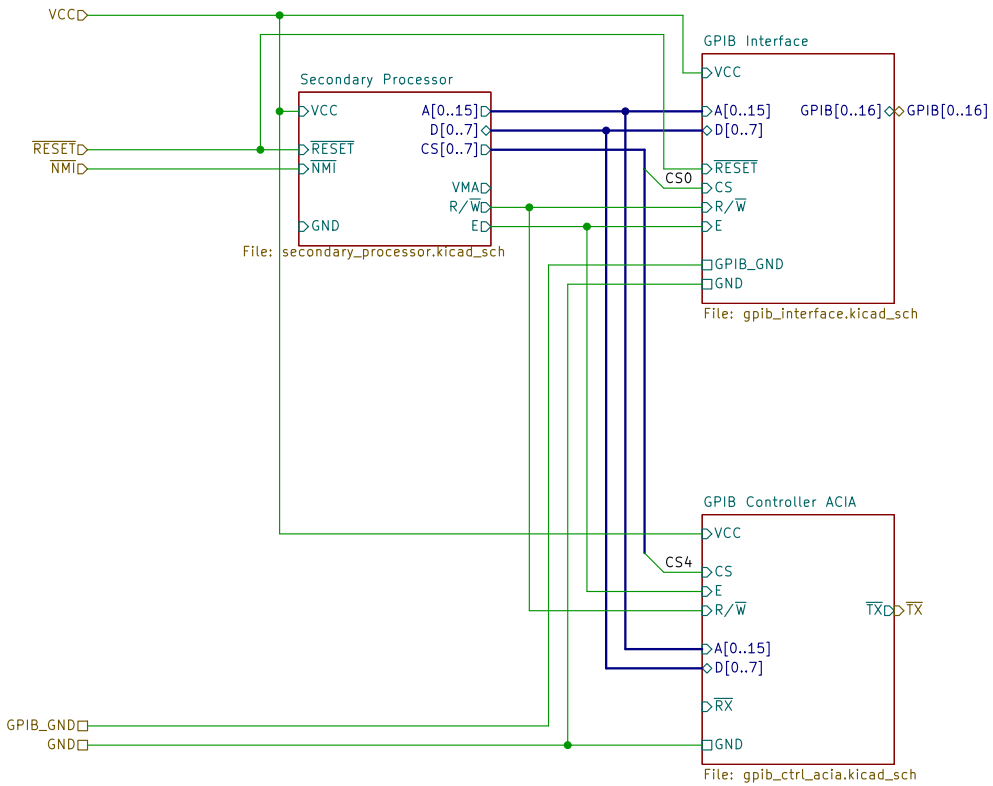

Sheet: /GPIB Controller/
File: gpib_controller.kicad_sch

Title:

Size: A4	Date:	Rev:
KiCad E.D.A. 10.0.0		Id: 2/20

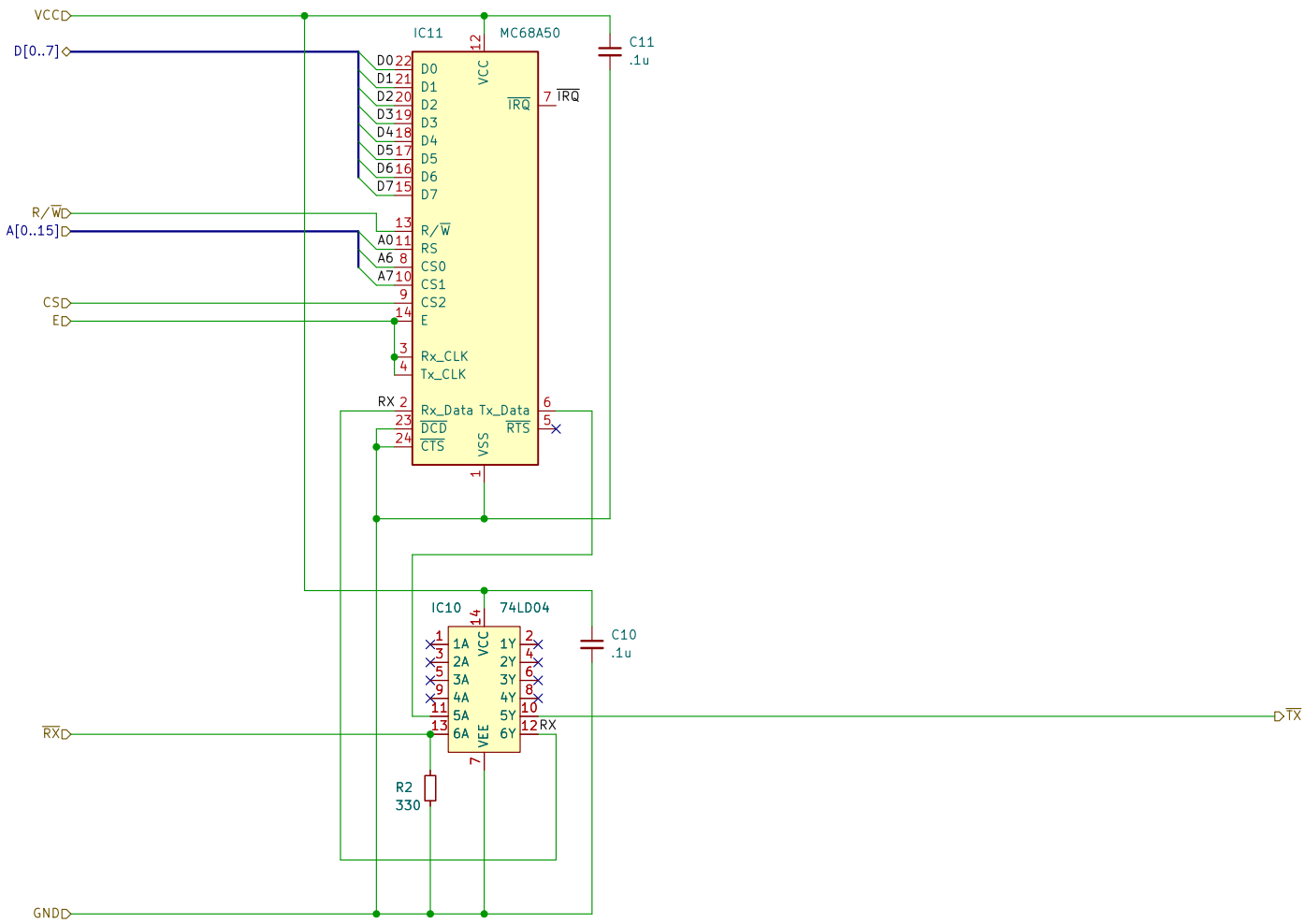

Sheet: /GPIB Controller/GPIB Controller ACIA/
File: gpib_ctrl_acia.kicad_sch

Title:

Size: A4	Date:	**Rev:**
KiCad E.D.A. 10.0.0		Id: 16/20

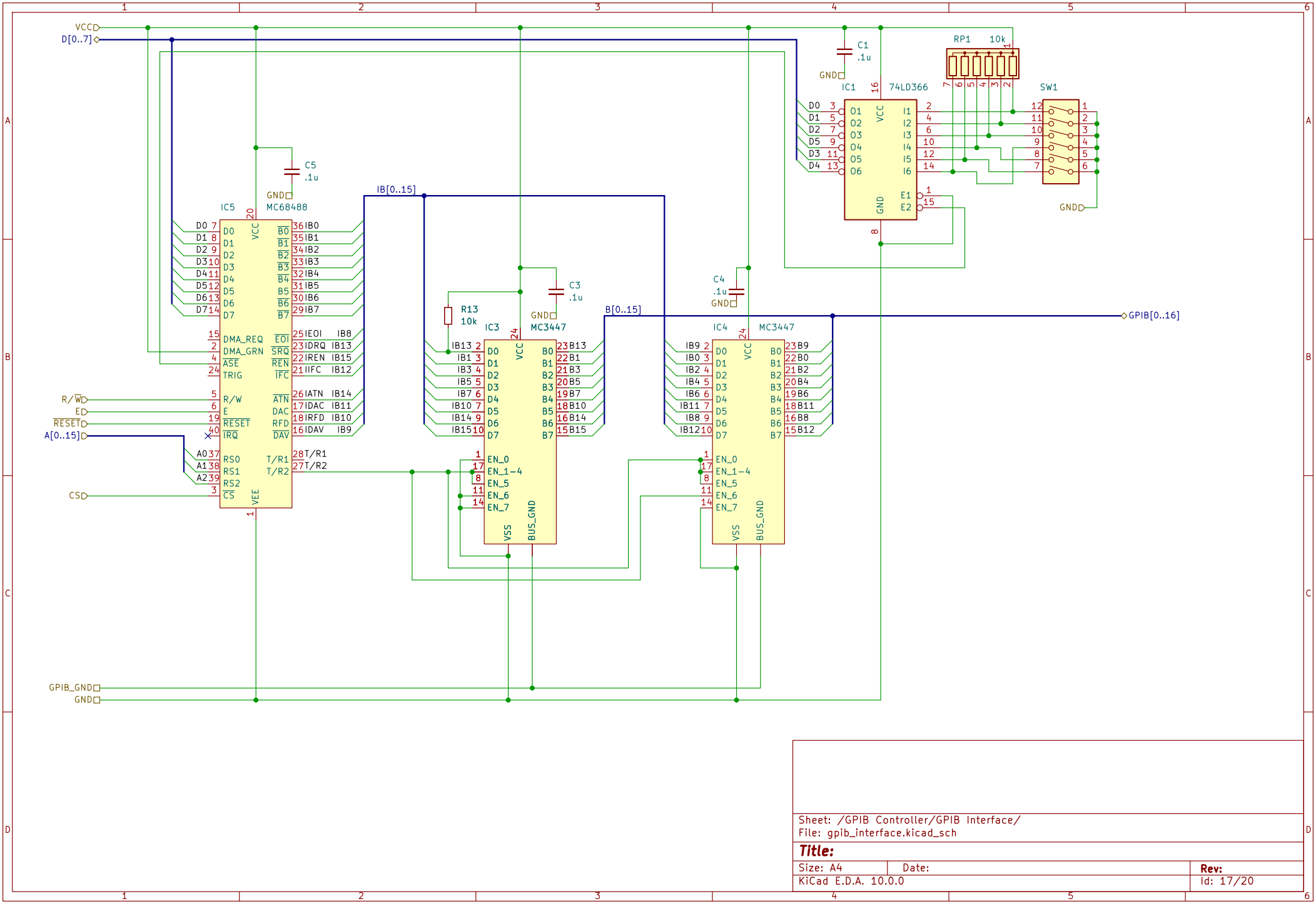

Sheet: /GPIB Controller/GPIB Interface/
File: gpib_interface.kicad_sch

Title:

Size: A4	Date:	Rev:
KiCad E.D.A. 10.0.0		Id: 17/20

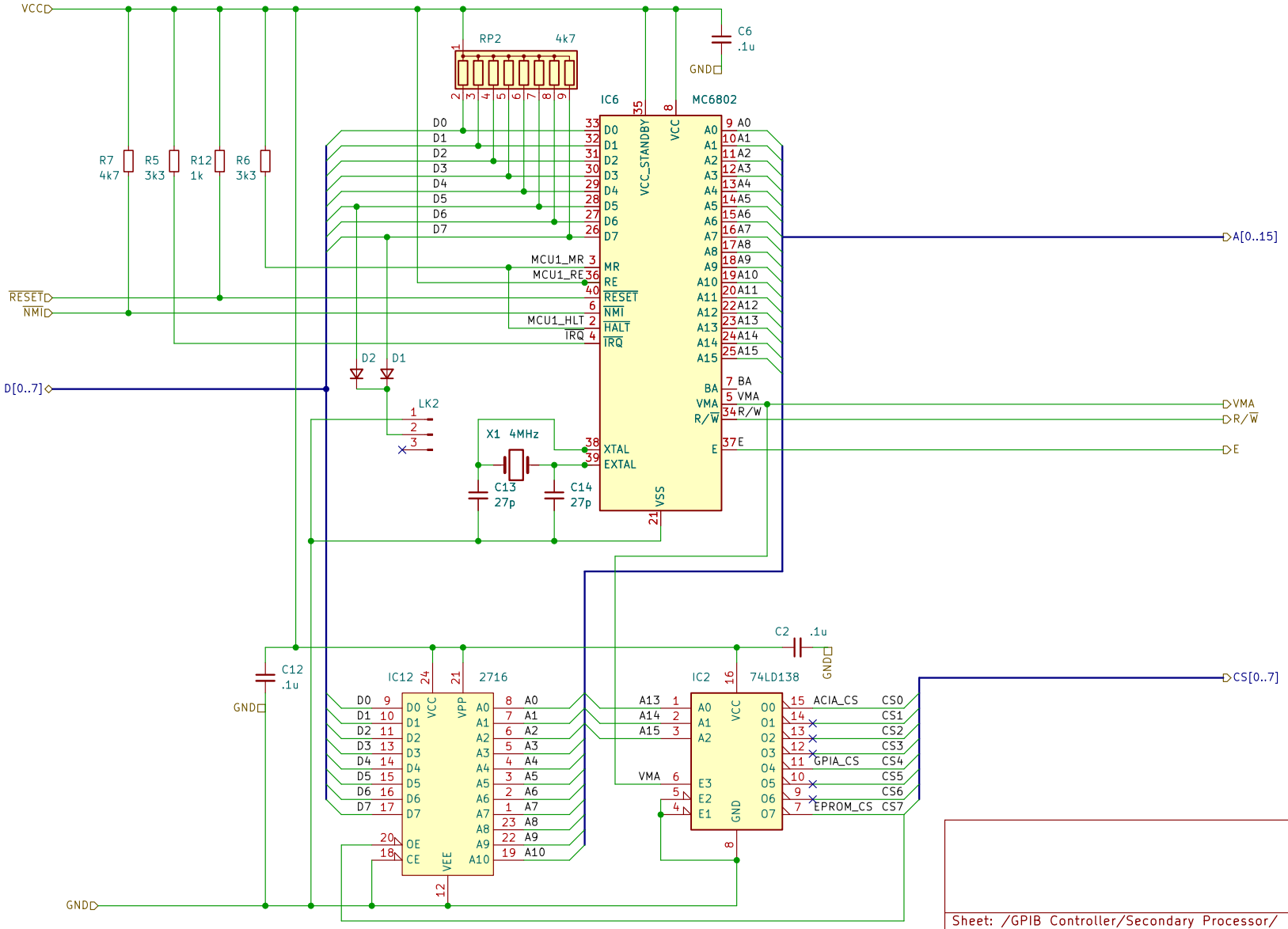

Sheet: /GPIB Controller/Secondary Processor/
File: secondary_processor.kicad_sch

Title:

Size: A4	Date:	Rev:
KiCad E.D.A. 10.0.0		Id: 18/20

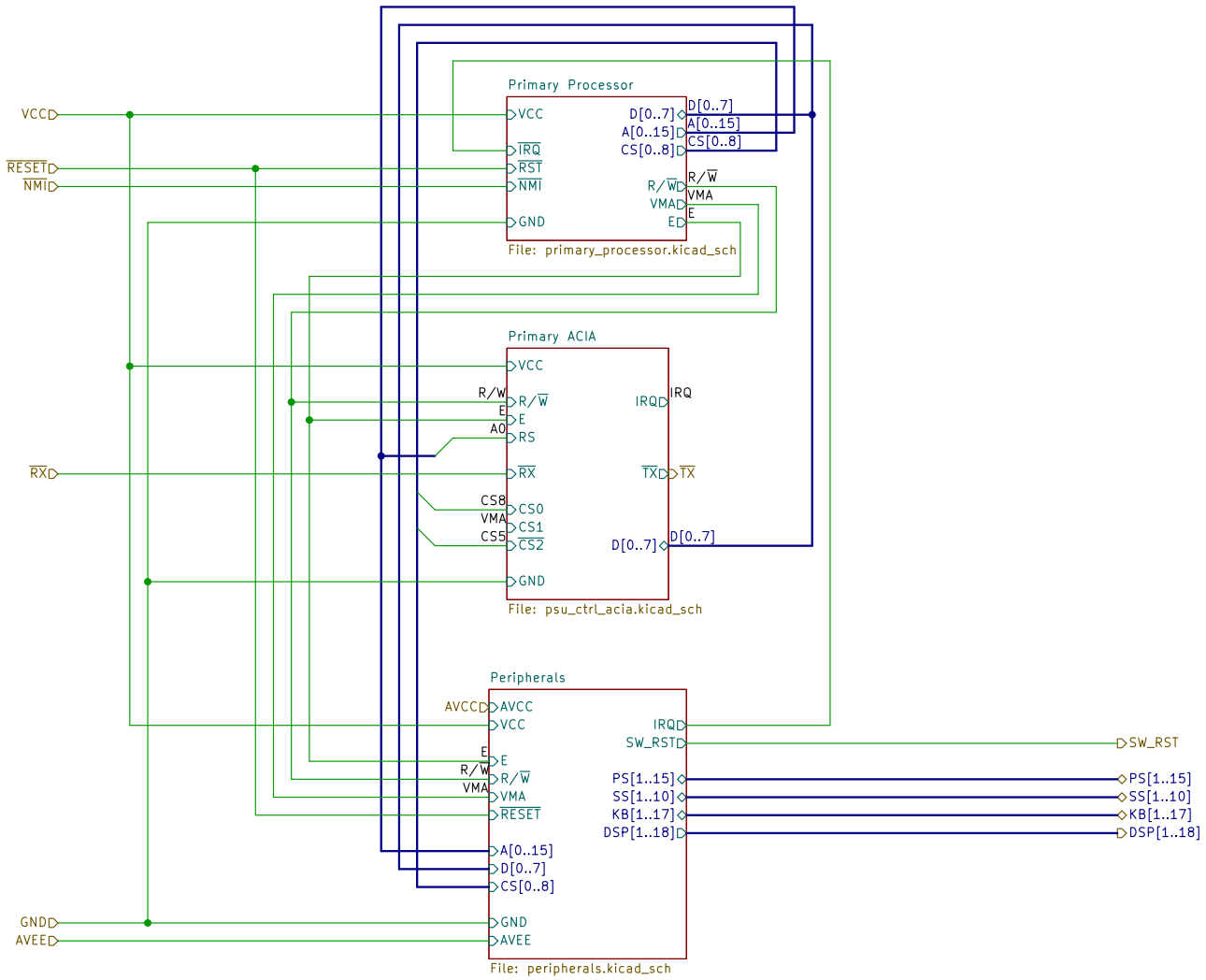

Sheet: /Primary Controller/
File: primary_controller.kicad_sch

Title:

Size: A4	Date:	Rev:
KiCad E.D.A. 10.0.0		Id: 3/20

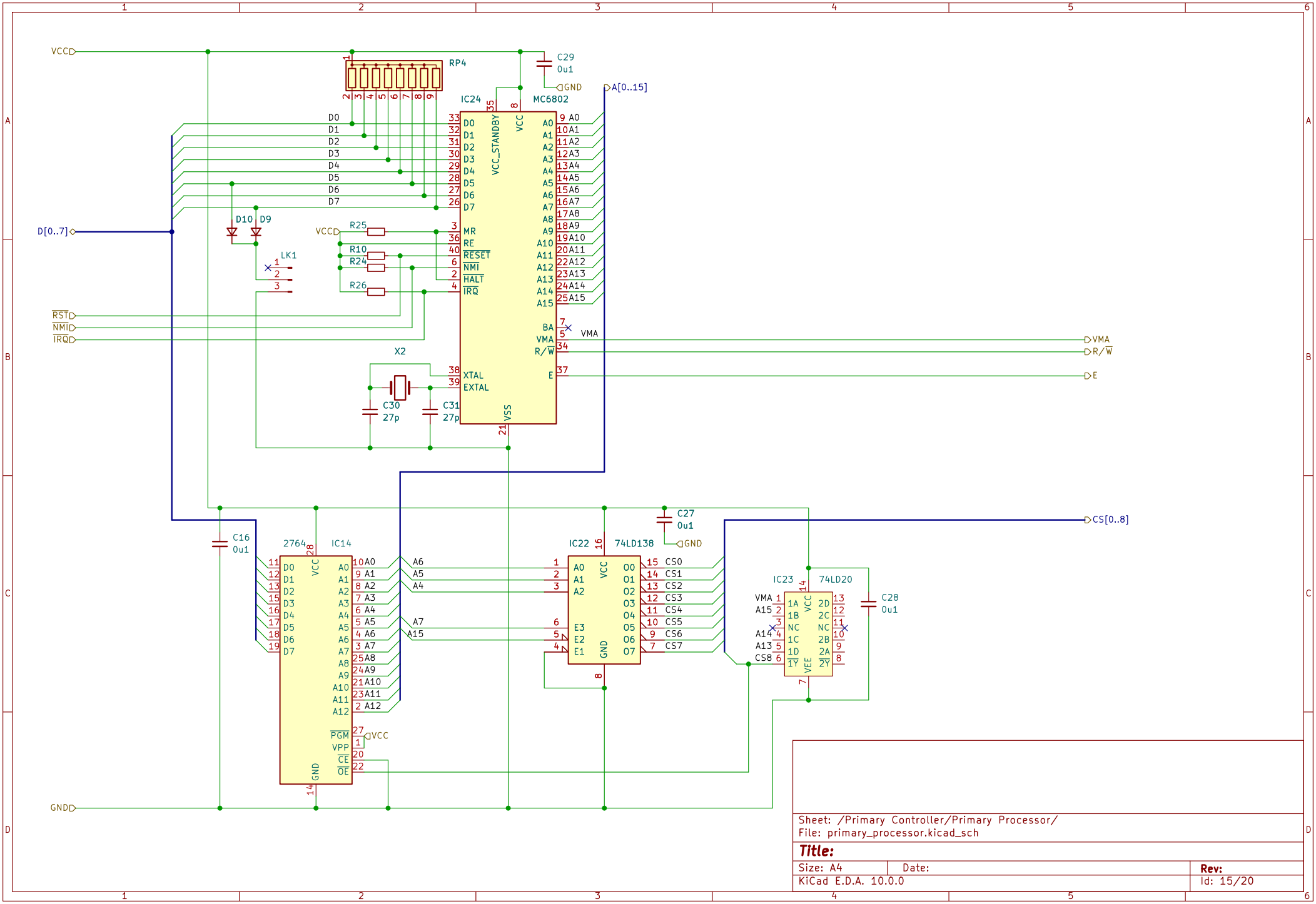

Sheet: /Primary Controller/Primary Processor/
File: primary_processor.kicad_sch

Title:

Size: A4	Date:	Rev:
KiCad E.D.A. 10.0.0		Id: 15/20

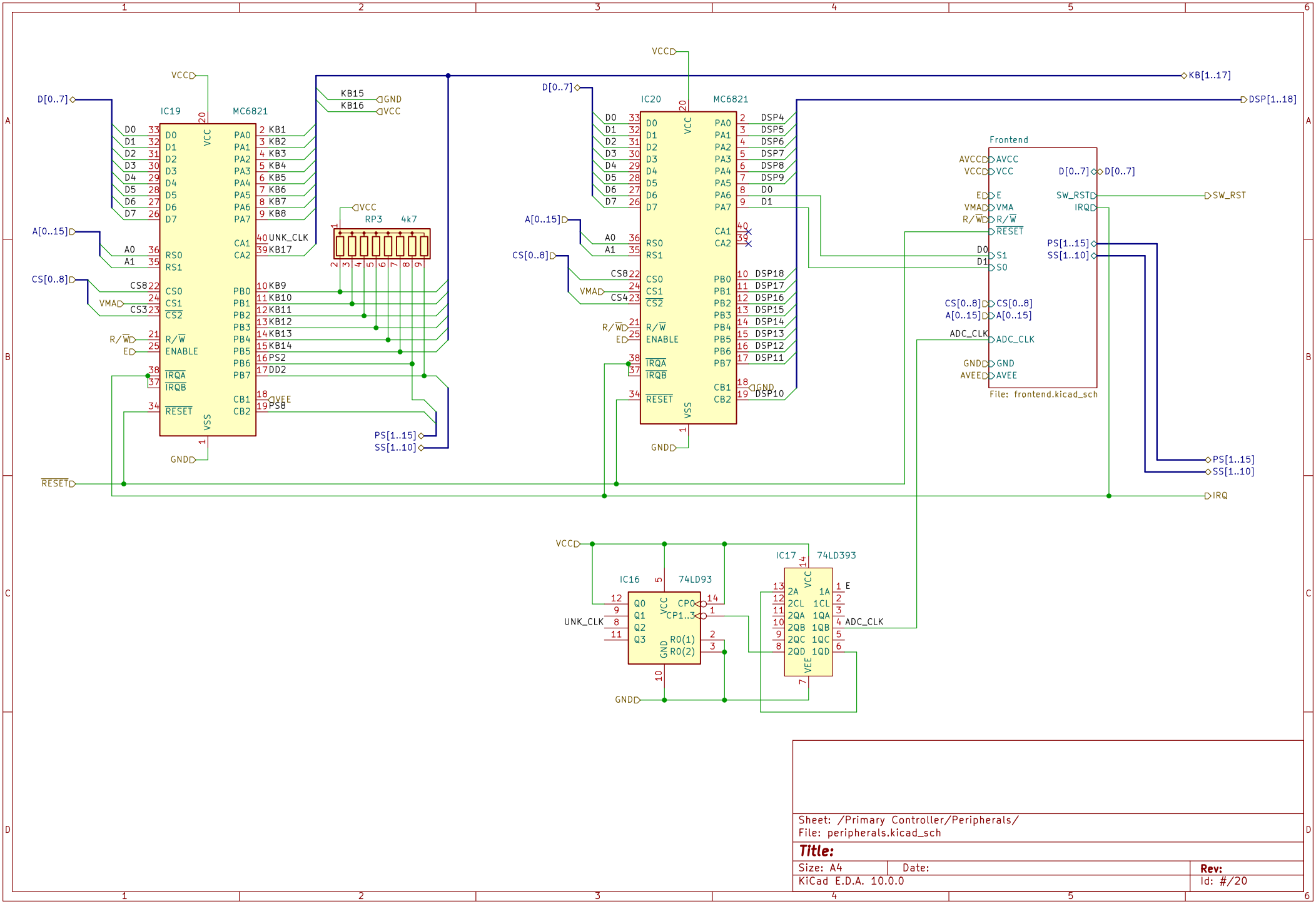

Sheet: /Primary Controller/Peripherals/
File: peripherals.kicad_sch

Title:

Size: A4	Date:	Rev:
KiCad E.D.A. 10.0.0		Id: #/20

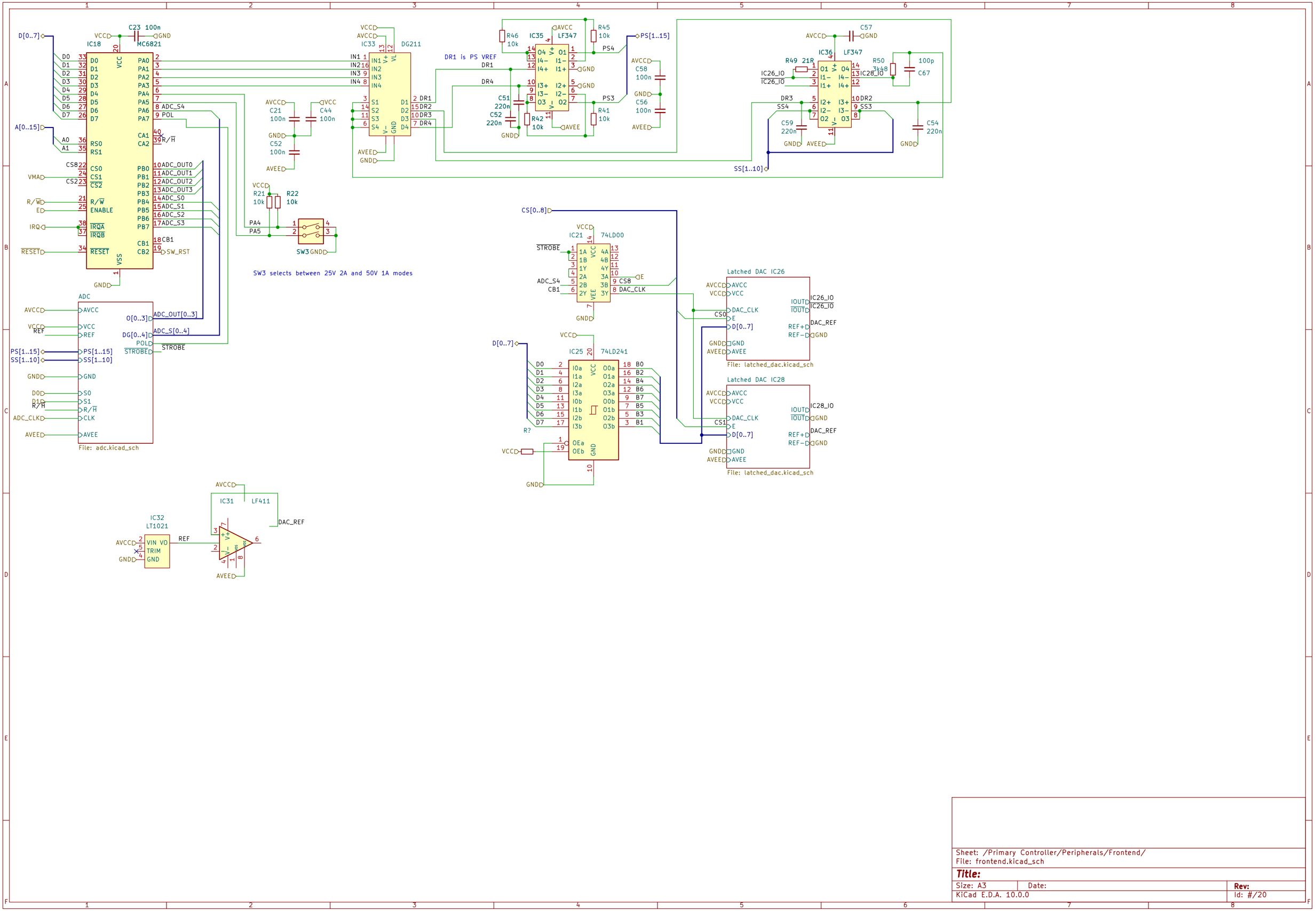

Sheet: /Primary Controller/Peripherals/Frontend/
File: frontend.kicad_sch

Title:

Size: A3	Date:	Rev:
KiCad E.D.A. 10.0.0		Id: #/20

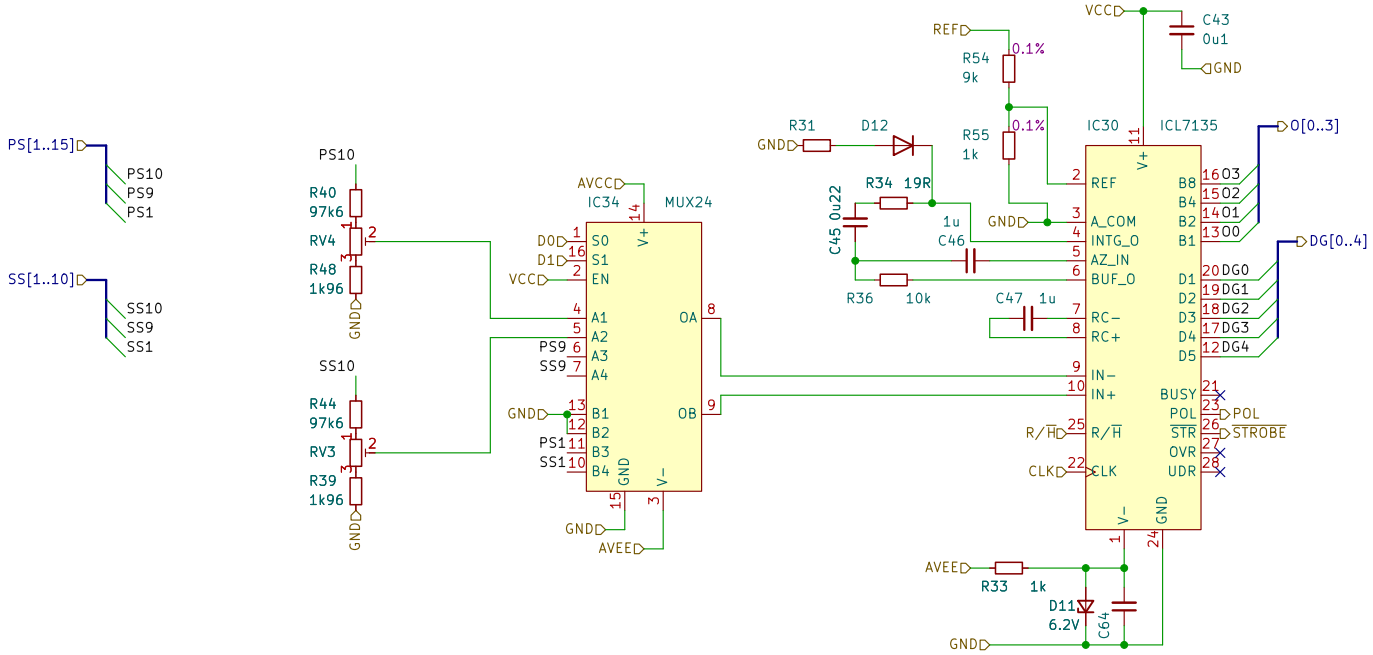

Sheet: /Primary Controller/Peripherals/Frontend/ADC/
File: adc.kicad_sch

Title:

Size: A4	Date:	Rev:
KiCad E.D.A. 10.0.0		Id: #/20

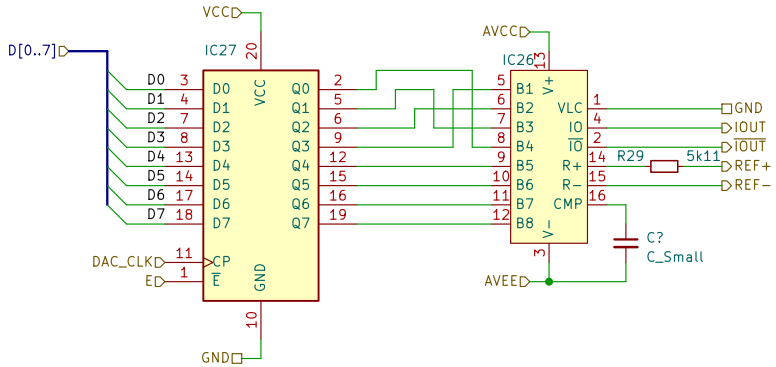

Sheet: /Primary Controller/Peripherals/Frontend/Latched DAC IC26/
File: latched_dac.kicad_sch

Title:

Size: A4	Date:	Rev:
KiCad E.D.A. 10.0.0		Id: #/20

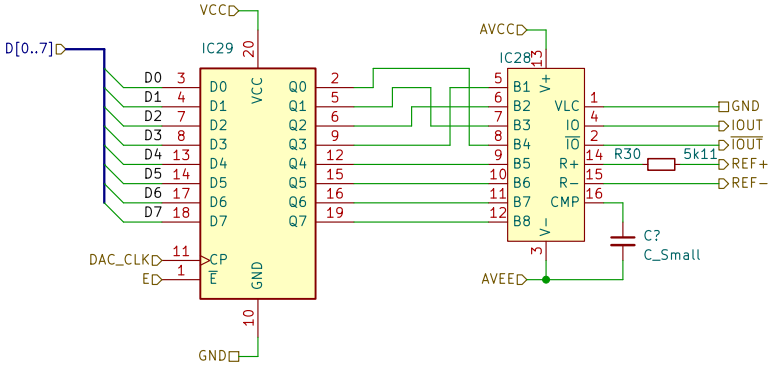

Sheet: /Primary Controller/Peripherals/Frontend/Latched DAC IC28/
File: latched_dac.kicad_sch

Title:

Size: A4	Date:	Rev:
KiCad E.D.A. 10.0.0		Id: #/20

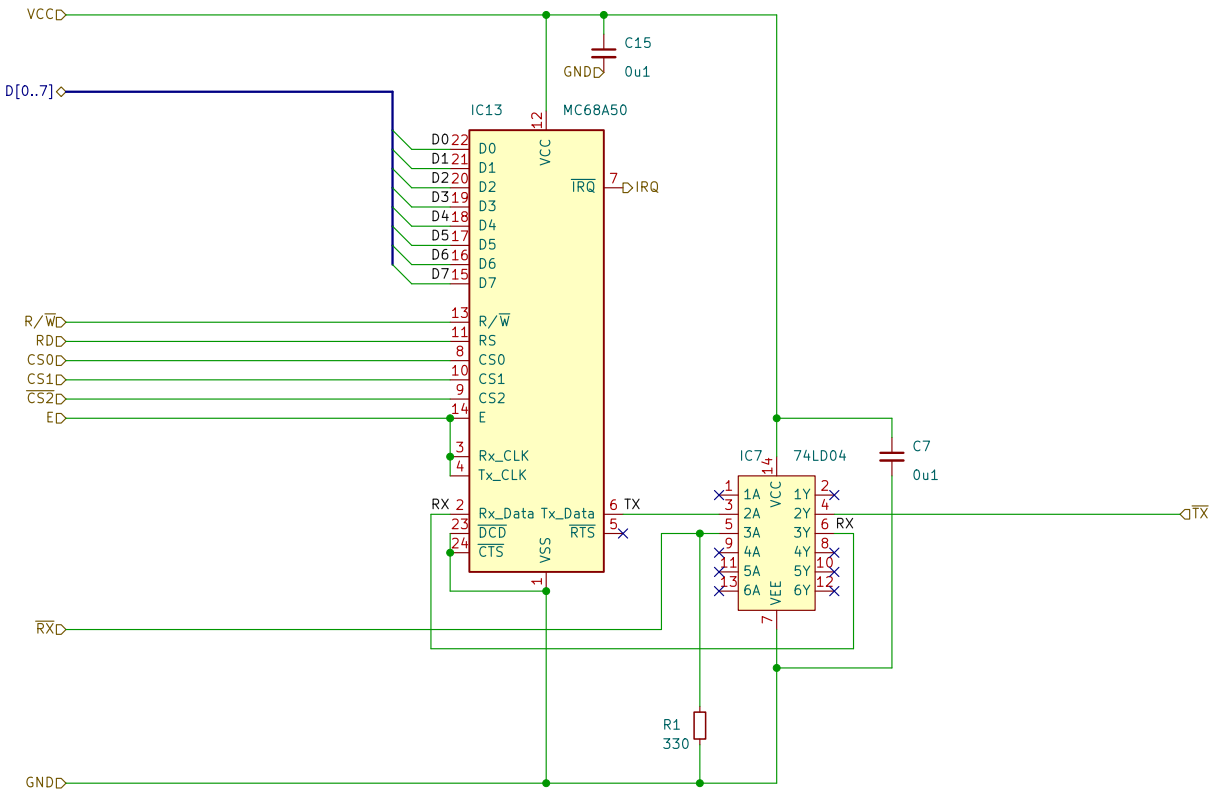

Sheet: /Primary Controller/Primary ACIA/
File: psu_ctrl_acia.kicad_sch

Title:

Size: A4	Date:	Rev:
KiCad E.D.A. 10.0.0		Id: #/20

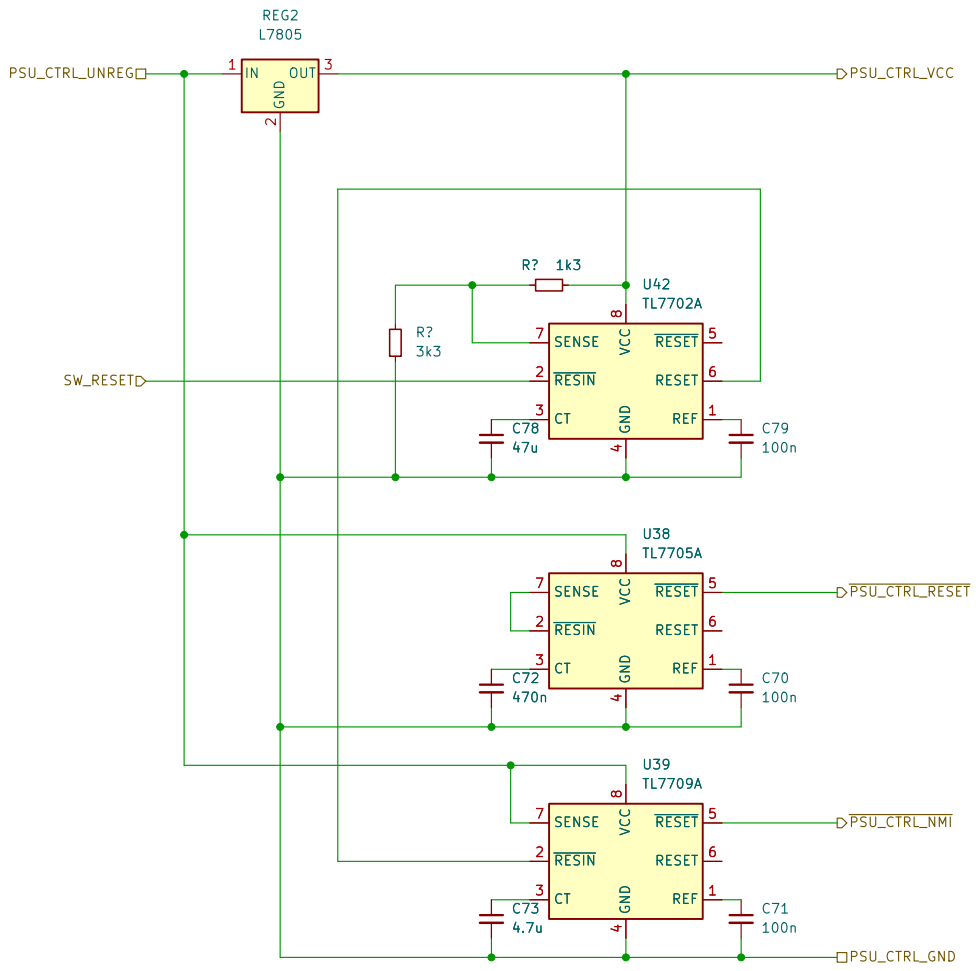

Sheet: /PSU Controller Regulation and Reset/
File: psu_ctrl_reg_and_reset.kicad_sch

Title:

Size: A4	Date:	**Rev:**
KiCad E.D.A. 10.0.0		Id: 4/20

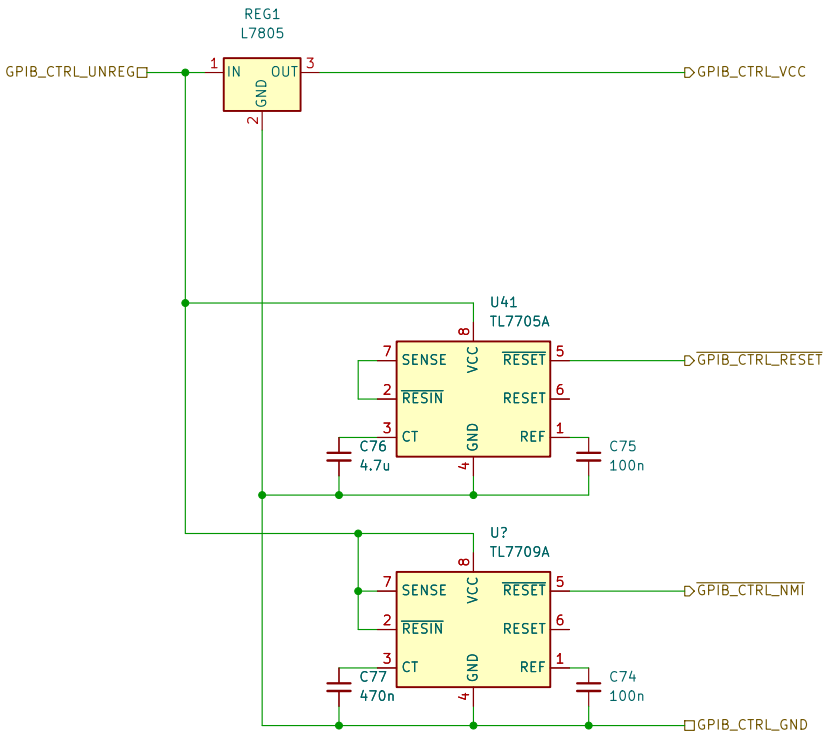

Sheet: /GPIB Controller Regulation and Reset/
File: gpib_ctrl_reg_and_reset.kicad_sch

Title:

Size: A4	Date:	**Rev:**
KiCad E.D.A. 10.0.0		Id: 5/20

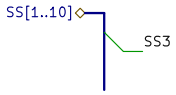

Sheet: /Secondary Supply/
File: secondary_supply.kicad_sch

Title:

Size: A4	Date:	**Rev:**
KiCad E.D.A. 10.0.0		Id: 9/20

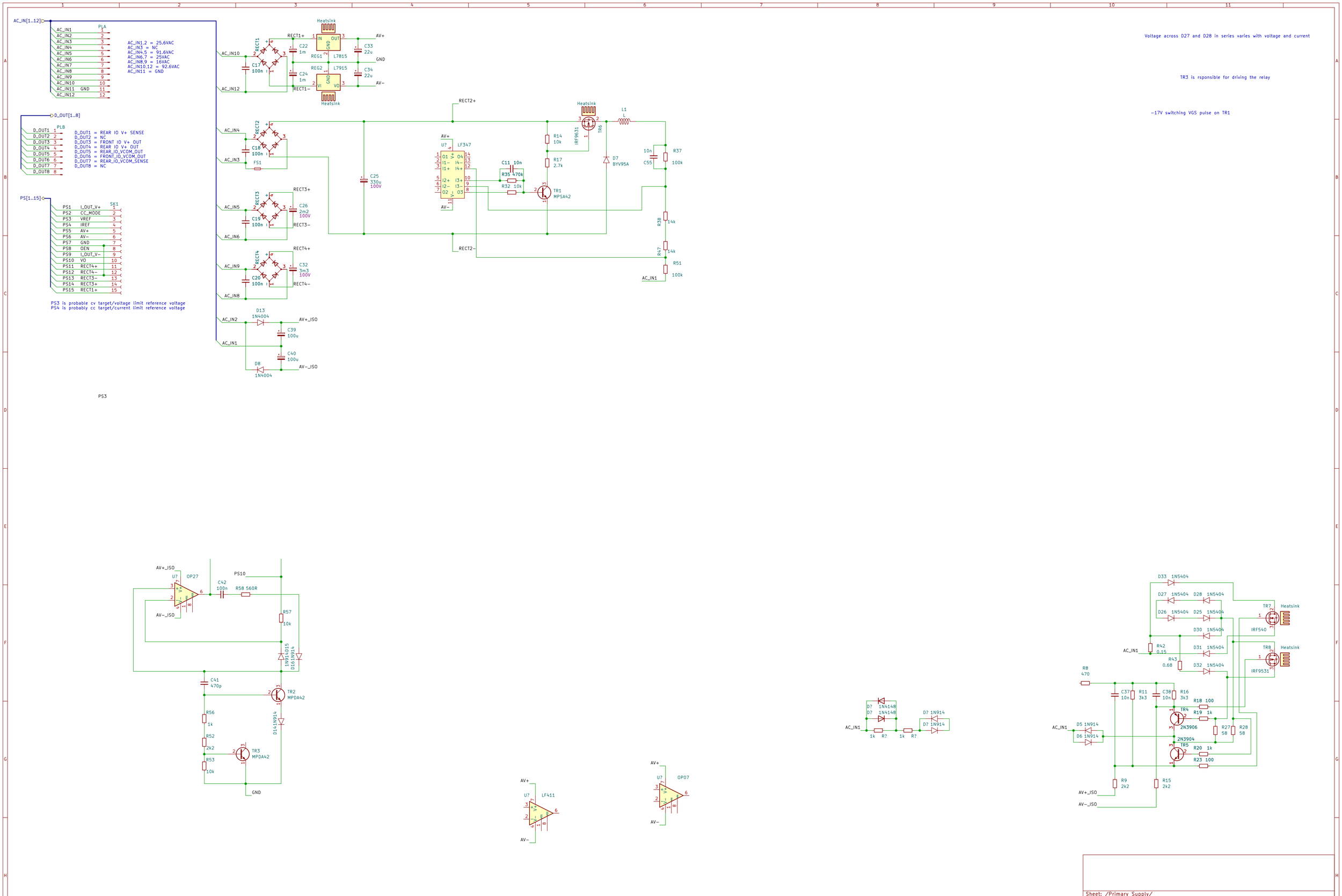

Voltage across D27 and D28 in series varies with voltage and current

TR3 is rsponsible for driving the relay

−17V switching VGS pulse on TR1

Sheet: /Primary Supply/	
File: primary_supply.kicad_sch	
Title:	
Size: A2 Date:	**Rev:**
KiCad E.D.A. 10.0.0	Id: 14/20

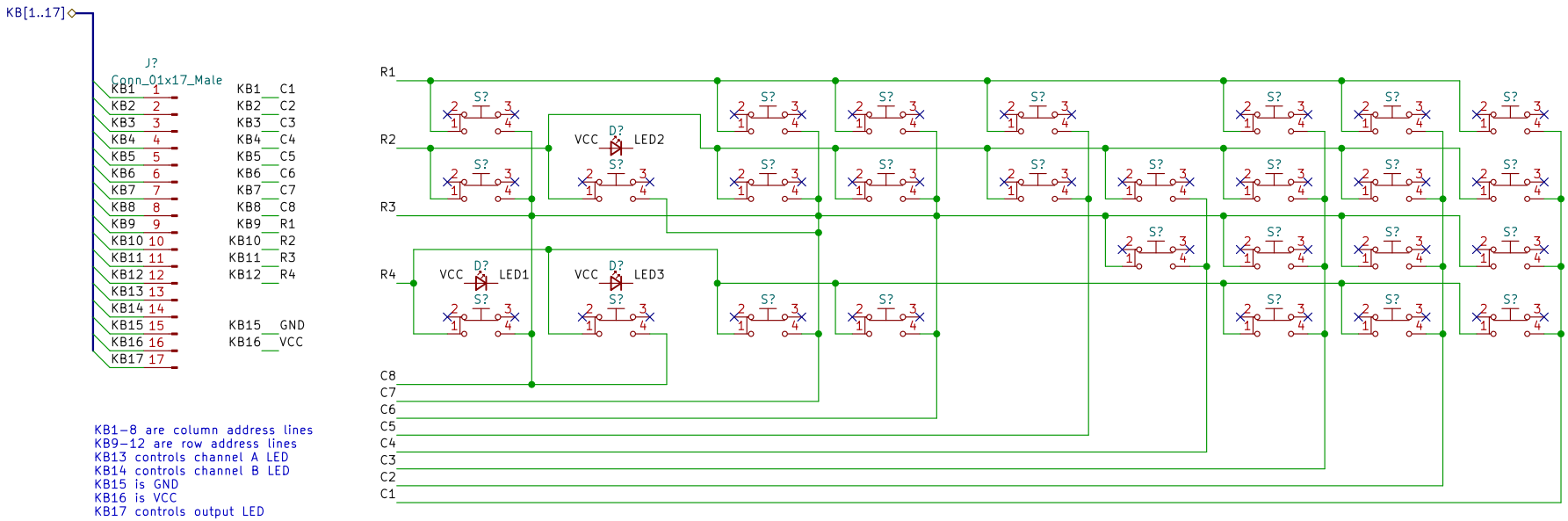

KB1–8 are column address lines
KB9–12 are row address lines
KB13 controls channel A LED
KB14 controls channel B LED
KB15 is GND
KB16 is VCC
KB17 controls output LED

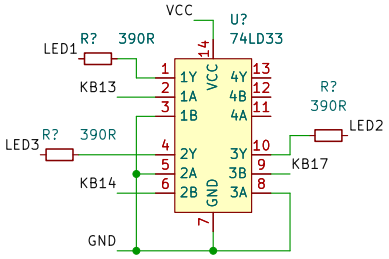

Sheet: /Keyboard/
File: keyboard.kicad_sch

Title:

Size: A4	Date:	Rev:
KiCad E.D.A. 10.0.0		Id: 15/20

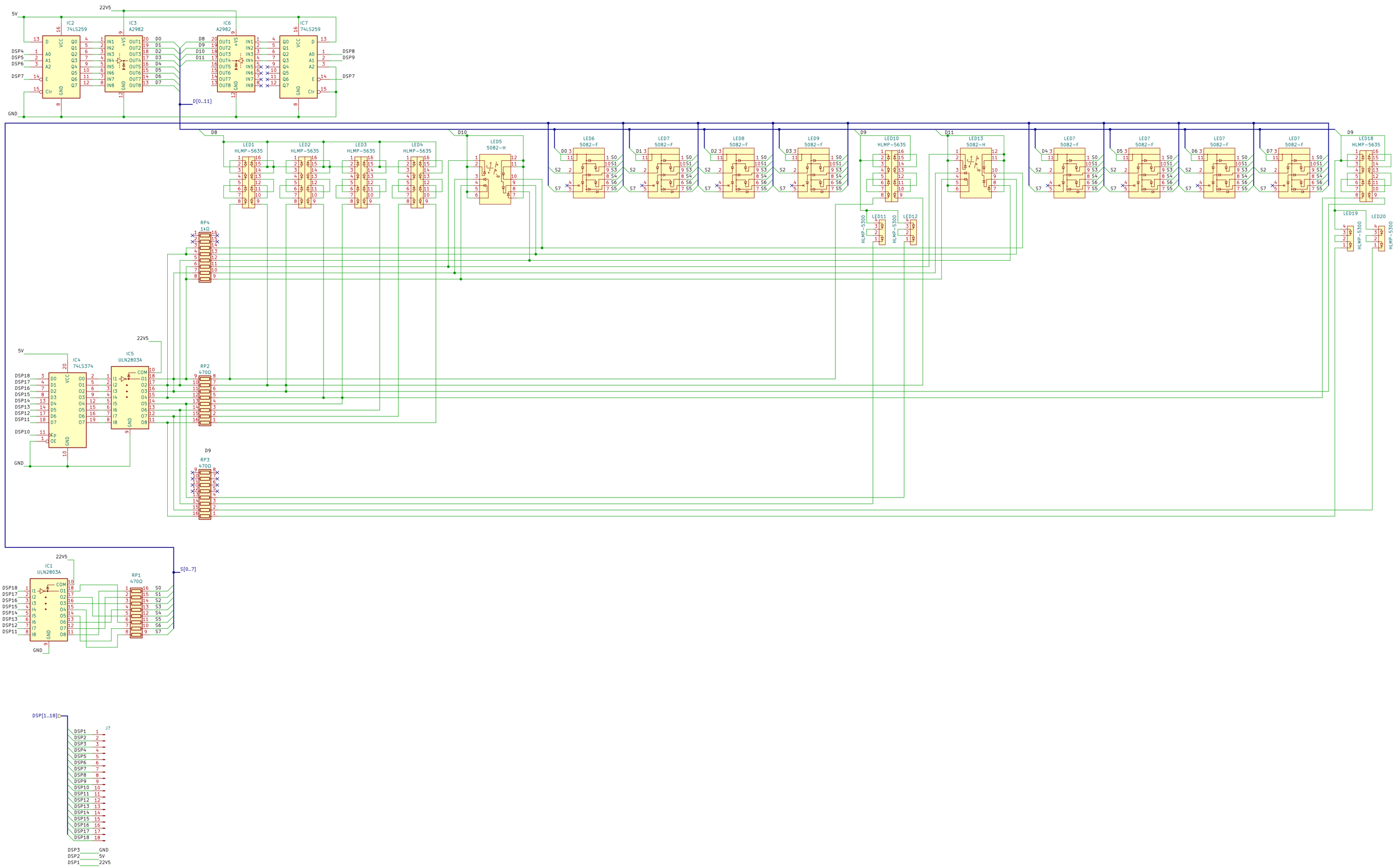

Sheet: /Display/
File: display.kicad_sch

Title:

Size: A2 | Date: | **Rev:**

KiCad E.D.A. 10.0.0 | Id: 16/20

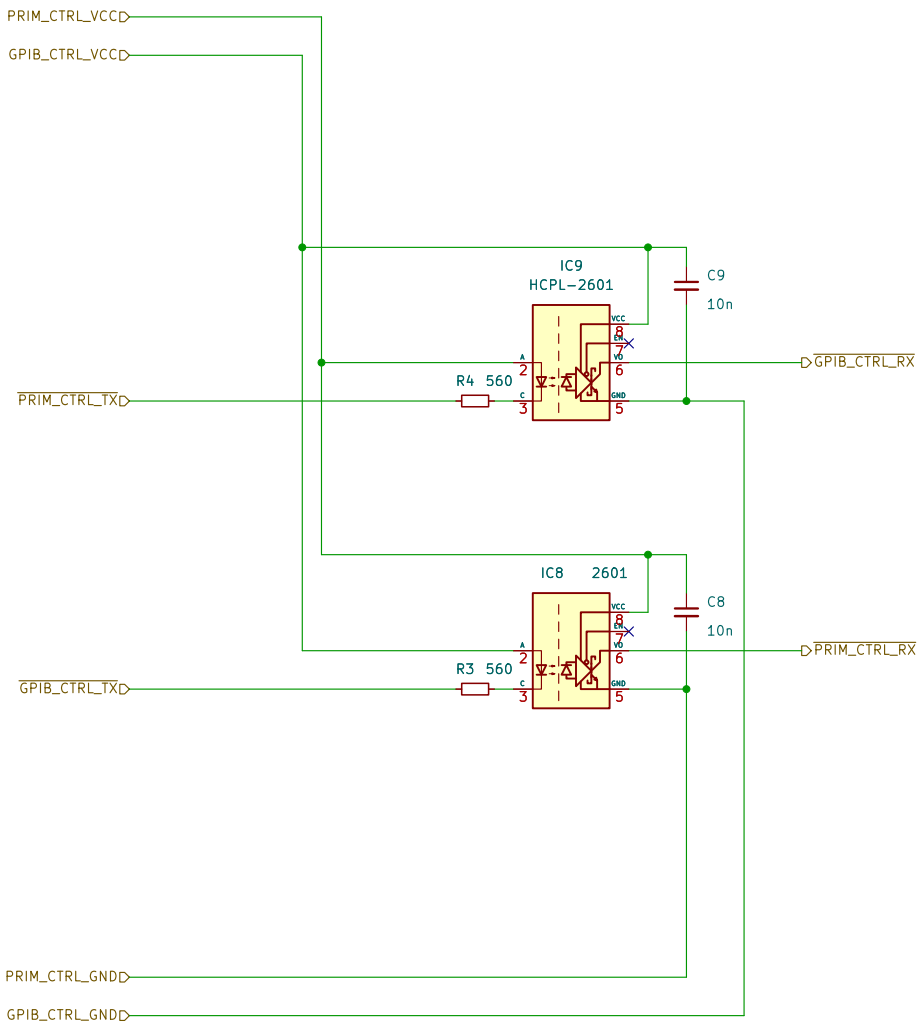

Sheet: /ACIA Isolation/
File: acia_isolation.kicad_sch

Title:

Size: A4	Date:	**Rev:**
KiCad E.D.A. 10.0.0		Id: 20/20