REVISION HISTORY			
REV	DESCRIPTION	DATE	APPROVED

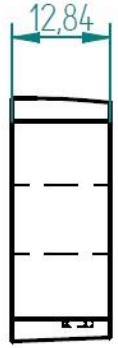

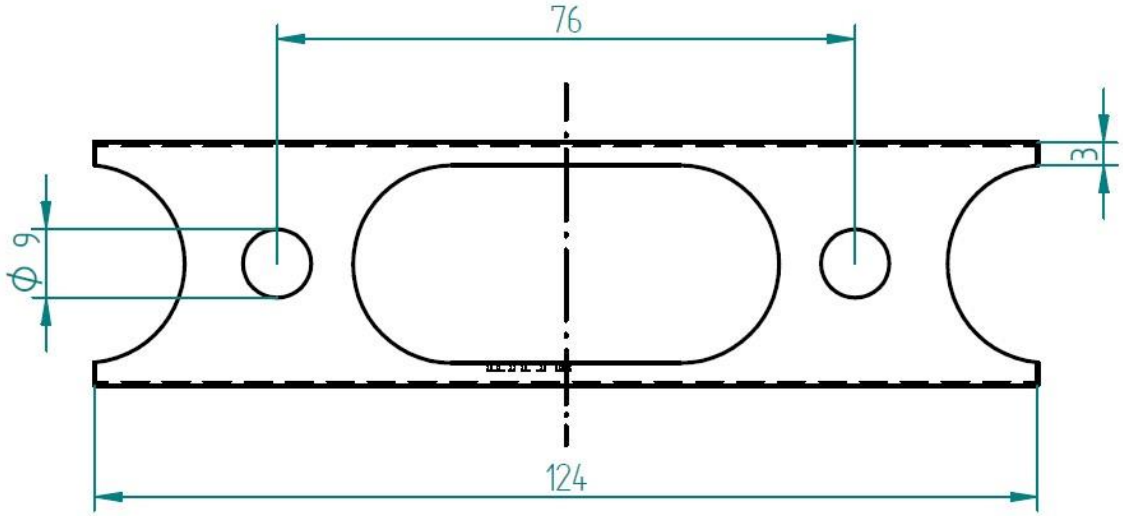

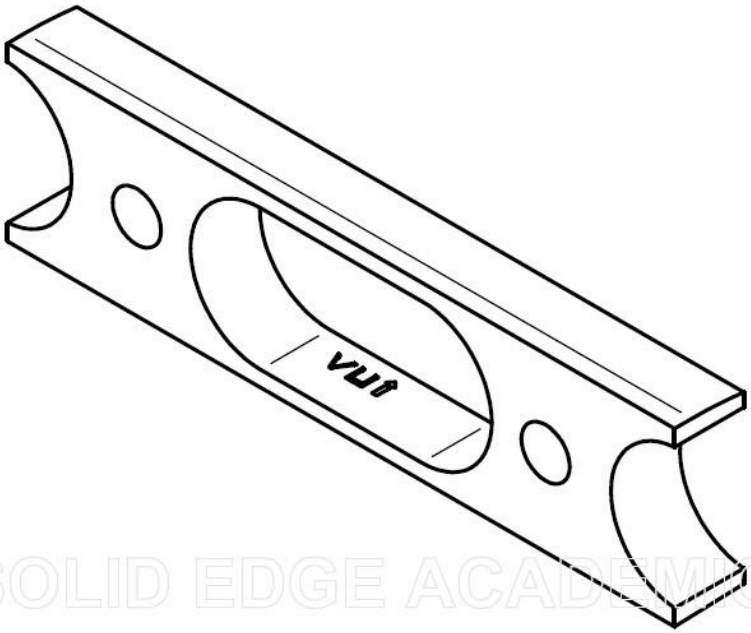

	NAME	DATE
DRAWN	Henri Kammler	03.01.2021
CHECKED		
ENG APPR		
MGR APPR		

UNLESS OTHERWISE SPECIFIED
DIMENSIONS ARE IN MILLIMETERS
ANGLES ±X.X°
2 PL ±X.XX 3 PL ±X.XXX

Solid Edge

TITLE
Holzklotz vorne

SIZE	DWG NO	REV
A4	0003	1

FILE NAME: KlotzVorne.dft

SCALE:	WEIGHT:	SHEET 1 OF 1

SOLID EDGE ACADEMIC COPY