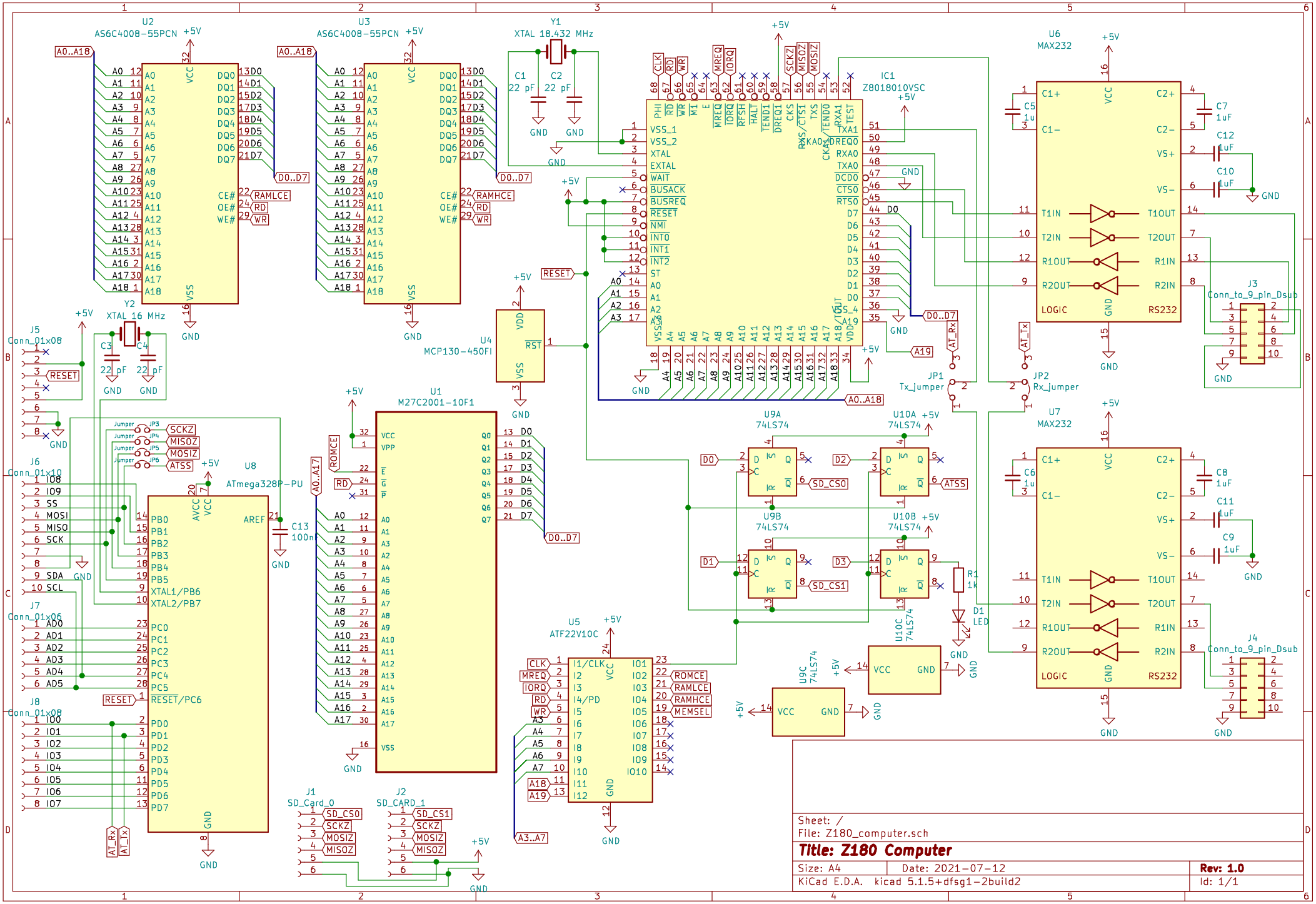
U2
AS6C4008-55PCN
U3
AS6C4008-55PCN
Y1
XTAL 18.432 MHz
C1
22 pF
C2
22 pF
IC1
Z8018010VSC
U6
MAX232
U7
MAX232
J3
Conn_to_9_pin_Dsub
J4
Conn_to_9_pin_Dsub
Y2
XTAL 16 MHz
C3
22 pF
C4
22 pF
J5
Conn_01x08
J6
Conn_01x10
J7
Conn_01x06
J8
Conn_01x08
U4
MCP130-450FI
U1
M27C2001-10F1
U8
ATmega328P-PU
C13
100n
U5
ATF22V10C
U9A
74LS74
U9B
74LS74
U10A
74LS74
U10B
74LS74
U10C
74LS74
U9C
74LS74
R1
1k
D1
LED
JP1
Tx_jumper
JP2
Rx_jumper
J1
SD_Card_0
J2
SD_CARD_1
A0..A18
D0..D7
RAMLCE
RAMHCE
RD
WR
RESET
ROMCE
A0..A17
SCKZ
MISOZ
MOSIZ
ATSS
SD_CS0
SD_CS1
MREQ
IORQ
CLK
MEMSEL
A3..A7
AT_Rx
AT_Tx
+5V
GND
Sheet: /
File: Z180_computer.sch
Title: Z180 Computer
Size: A4
Date: 2021-07-12
Rev: 1.0
KiCad E.D.A. kicad 5.1.5+dfsg1-2build2
Id: 1/1