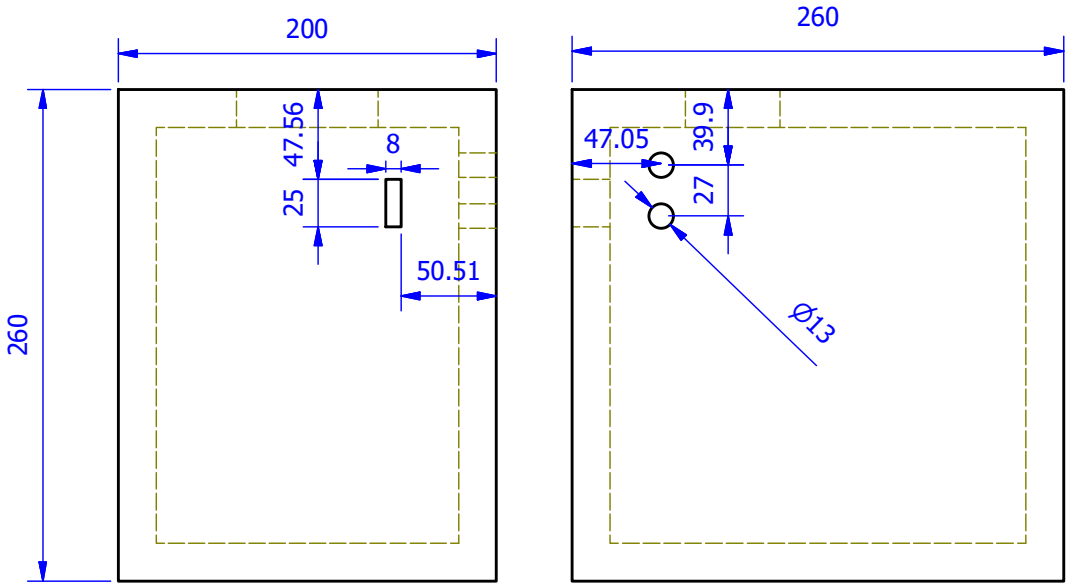

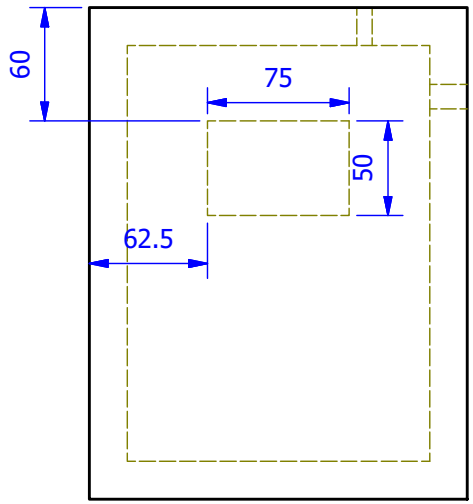

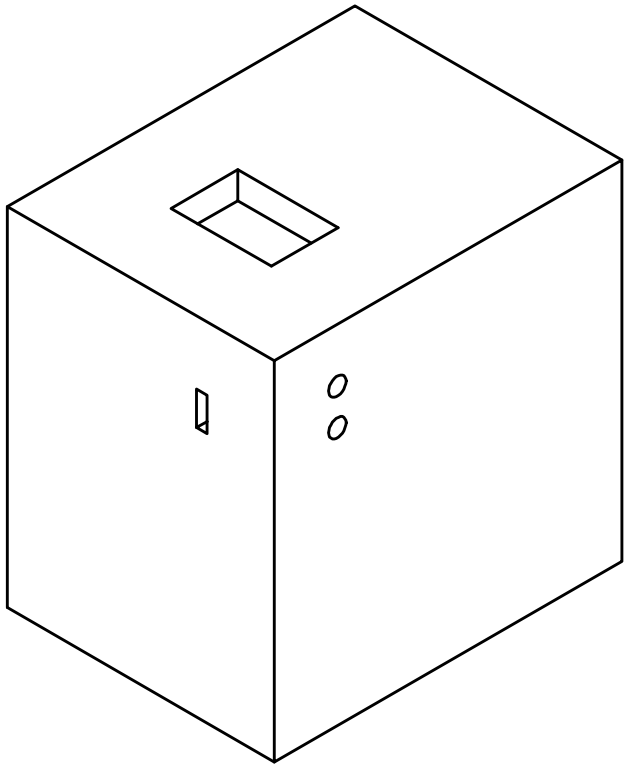

UNLESS OTHERWISE SPECIFIED, ALL DIMENSIONS IN MM
GENERAL TOLERANCE AS PER ISO2768-1 (MEDIUM SERIES)

NOMINAL DIMENSION	OVER	0.5	3	6	30	120	315
	UP TO	3	6	30	120	315	1000
PERMISSIBLE VARIATION		±0.1	±0.1	±0.2	±0.3	±0.5	±0.8

SINGAPORE POLYTECHNIC
SCHOOL OF MECHANICAL AND AERONAUTICAL ENGINEERING

DRAWN	CHECKED	DATE	QTY	SCALE	PROJECT TITLE	
Qays Faaris		25/6/19	01	2:1	NAME	
LECTURER	MATERIAL		DRAWING NO.		PART NAME	
ROY ANG			1/1		Crushed Can Compartment	
					CLASS/GROUP NO.	SIZE
					DME/FT/2A/01	A4