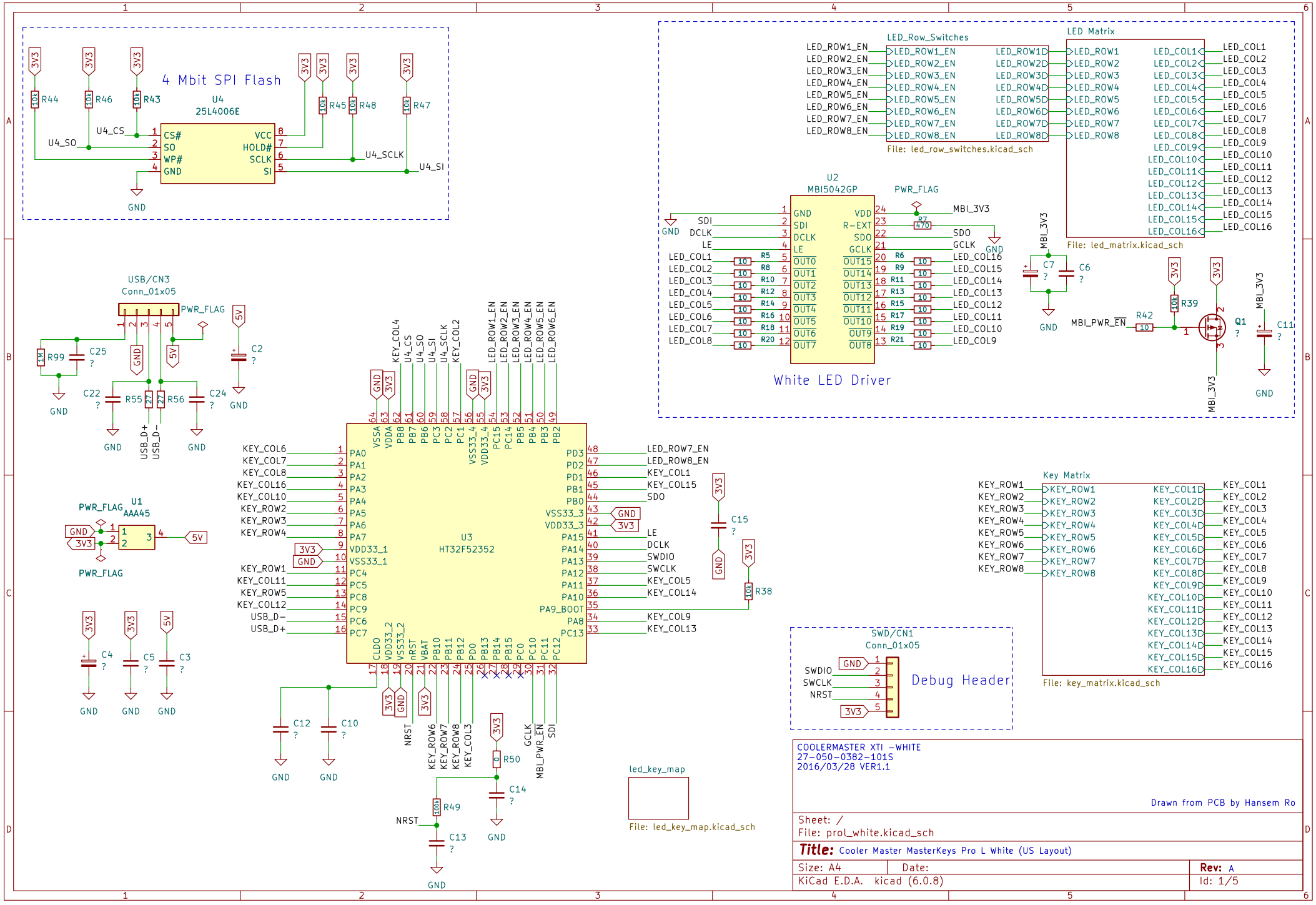
4 Mbit SPI Flash
U4
25L4006E
CS#
SO
WP#
GND
VCC
HOLD#
SCLK
SI
U4_CS
U4_SO
U4_SCLK
U4_SI
R44
R46
R43
R45
R48
R47
LED_Row_Switches
File: led_row_switches.kicad_sch
LED Matrix
File: led_matrix.kicad_sch
U2
MBI5042GP
PWR_FLAG
MBI_3V3
White LED Driver
USB/CN3
Conn_01x05
PWR_FLAG
U1
AAA45
U3
HT32F52352
Key Matrix
File: key_matrix.kicad_sch
SWD/CN1
Conn_01x05
SWDIO
SWCLK
NRST
Debug Header
R38
R50
R49
C13
C14
C15
C12
C10
C4
C5
C3
C2
C22
C24
C25
C7
C6
C11
R99
R55
R56
R39
R42
Q1
MBI_PWR_EN
USB_D+
USB_D-
led_key_map
File: led_key_map.kicad_sch
COOLERMASTER XTI -WHITE
27-050-0382-101S
2016/03/28 VER1.1
Drawn from PCB by Hansem Ro
Sheet: /
File: prol_white.kicad_sch
Title: Cooler Master MasterKeys Pro L White (US Layout)
Size: A4
Date:
Rev: A
KiCad E.D.A. kicad (6.0.8)
Id: 1/5

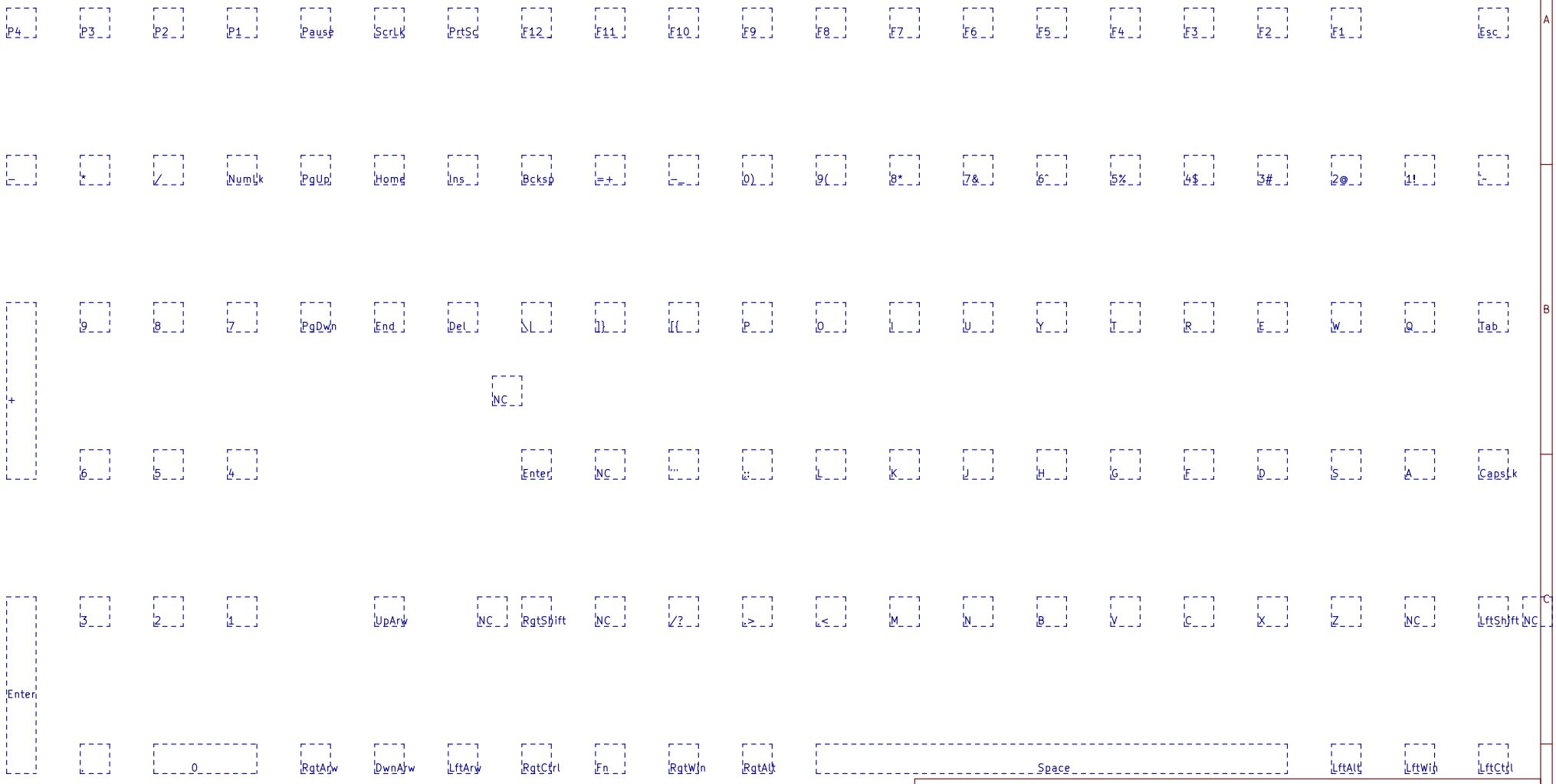

Drawn from PCB by Hansem Ro

Sheet: /led_key_map/
File: led_key_map.kicad_sch

Title:

Size: A4	Date:	Rev:
KiCad E.D.A. kicad (6.0.8)		Id: 2/5

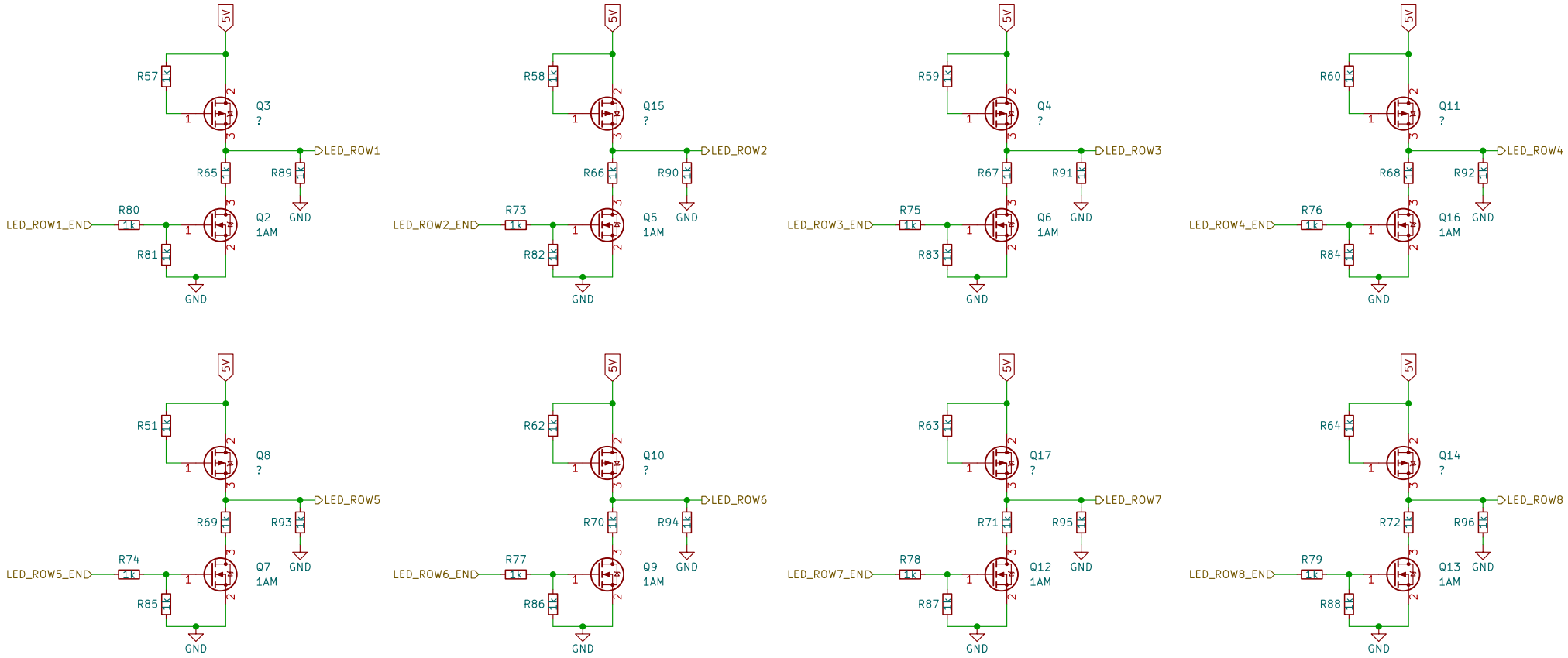

Drawn from PCB by Hansem Ro

Sheet: /LED_Row_Switches/
File: led_row_switches.kicad_sch

Title: LED Row Switches

Size: A4	Date:	**Rev:**
KiCad E.D.A. kicad (6.0.8)		Id: 3/5

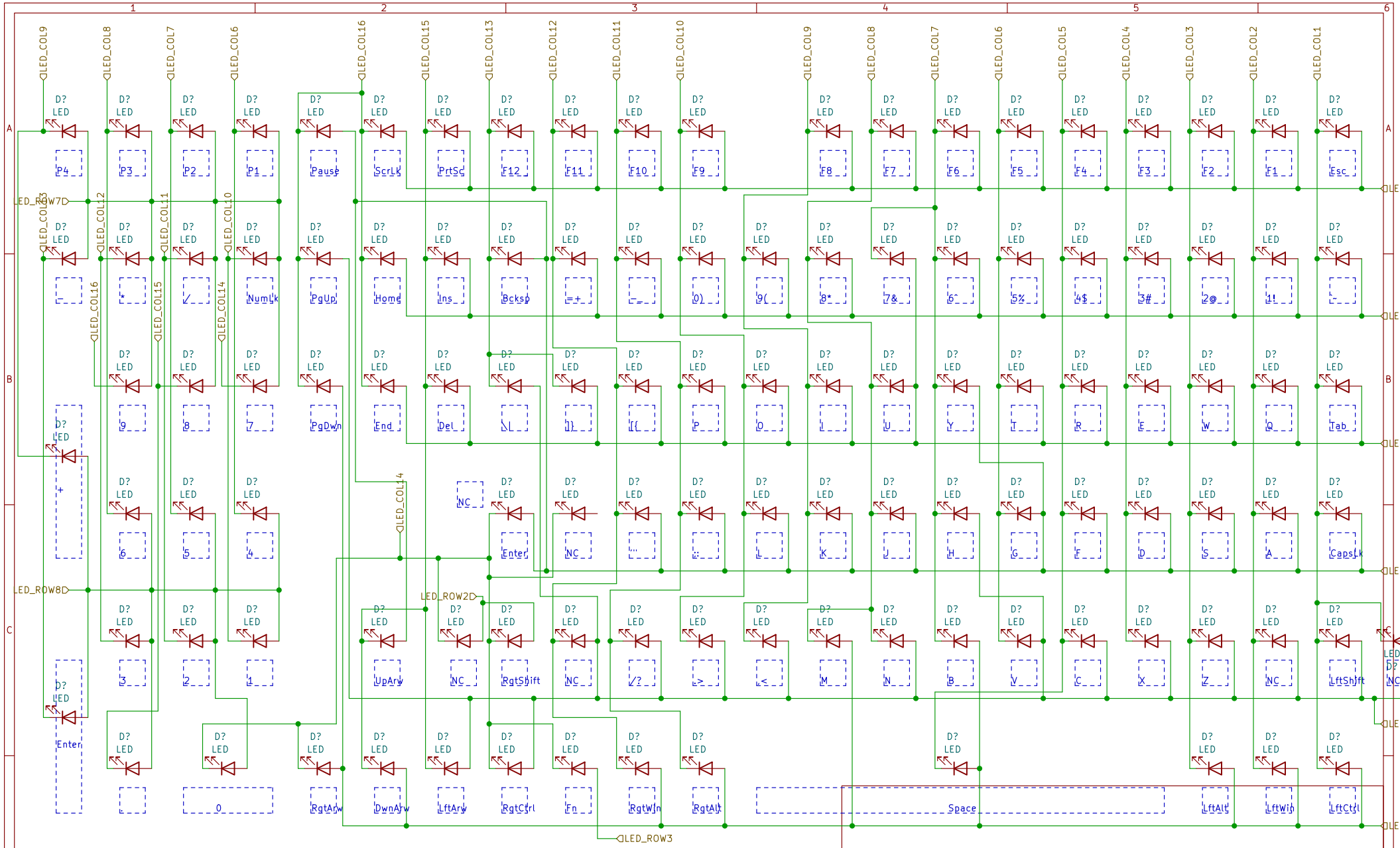

Drawn from PCB by Hansem Ro

Sheet: /LED Matrix/
File: led_matrix.kicad_sch

Title: LED Matrix

Size: A4	Date:	**Rev:** A
KiCad E.D.A. kicad (6.0.8)		Id: 4/5

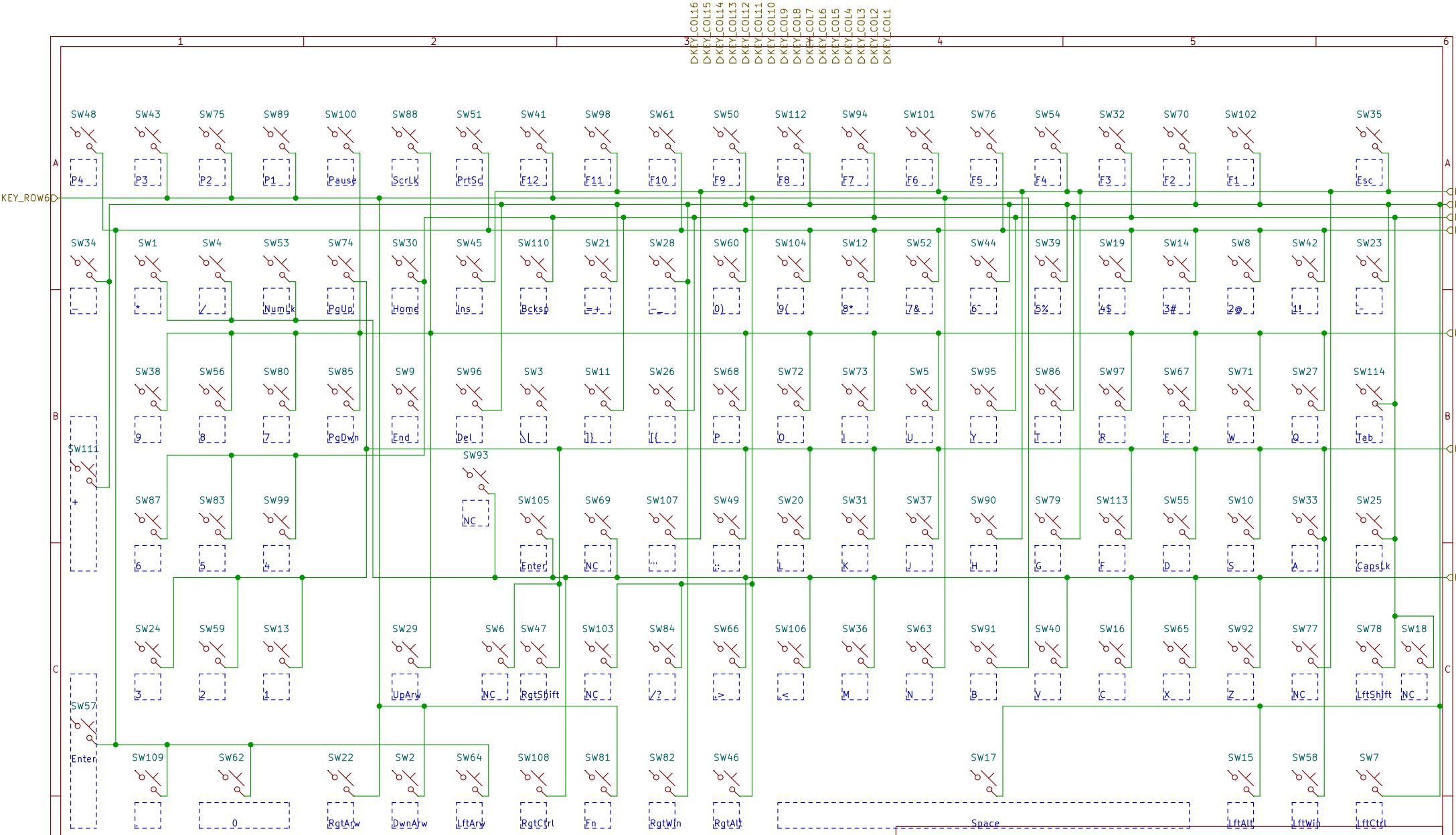

Work in progress...

Columns are unconnected since diodes are below metal plate.

Drawn from PCB by Hansem Ro

Sheet: /Key Matrix/
File: key_matrix.kicad_sch

Title: Key Matrix

Size: A4	Date:	**Rev:** WIP
KiCad E.D.A. kicad (6.0.8)		Id: 5/5