Lec32

31 March 2026 02:03 PM

$n \rightarrow 10$

```
for(0 ---> n){

}
```

① worst case

① best case

② Average case

Big O notation

Time complexity

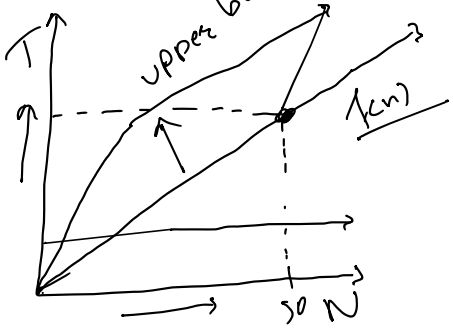

$\longrightarrow n$

$\rightarrow [7, 9, 1, 2, 8] \rightarrow 5$

$\rightarrow [1, 2, 7, 8, 9]$

[arr.length - 1]

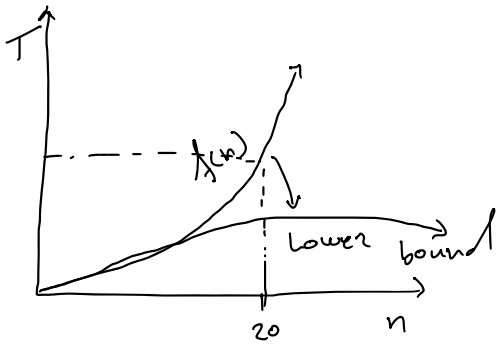

[+ −] →

[/ *] $(\log^n)$

%

```
for(0 ---> n ; i++)

for(n ---> 0 ; i--)
```

$\llcorner *\lrcorner$

10/6

for(n ⟶ 0 ; n--)

$O(n)$

1024

for(n ⟶ 0; n/=2){ $n=10$, $n=9$, $n=8$

}

1 — n = 1024/2
1 — n = 512/2
1 — n = 256/2
1 — n = 128/2
1 — n = 64/2
1 — n = 32/2
= 16/2
1
1
1

for(n ⟶ 0; n--){ ⟶ n

for (i=0 ⟶ n; i*=2){ ⟶ logn

}

}

(n * logn)

n logn

for(

```
for (i = 1; i <= n; i++) {
    for (int j = 1; j <= i * i; j++) {
        for (k = 1; k <= n / 2; k++) {
            System.out.println("hey");
        }
    }
}
```

n ⟶ n = 1000

n² ⟶ n =

n ⟶ n =

n * n² * n

= n^4

2D Array

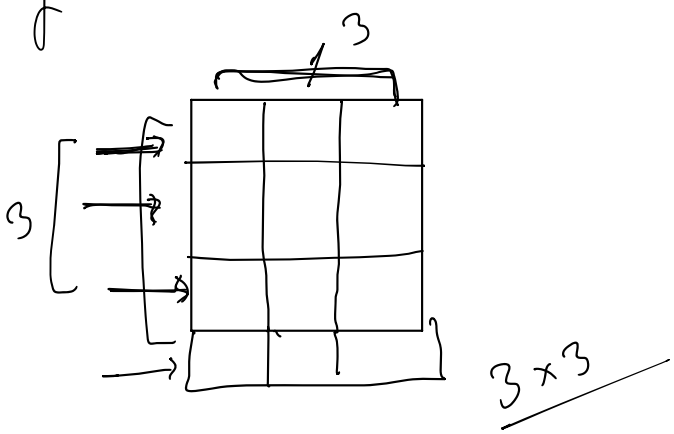

int arr[] = new int[5]

int arr[][] = new int[3][4]

row col

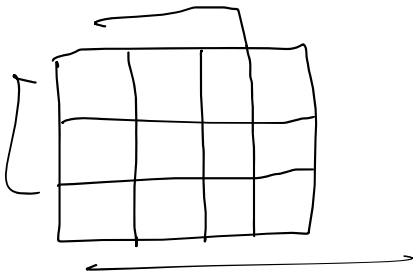

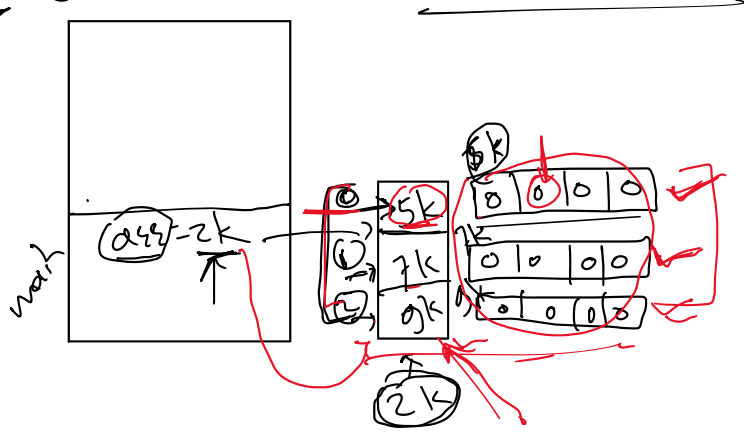

n → 3
m → 4

n+1

Sout(arr) → 2k

Sout(arr[0]) → 0 , 5k

Sout(arr[0][1]) → 0

V1+1

System.out(arr[0][1]) → 0

row col

[[I@69379752
[I@27fe3806
0

= [0][1]

	0	1	2
0	1 (0-0)	2 (0-1)	10 (0-2)
1	4 (1-0)	5 (1-1)	6 (1-2)
2	7 (2-0)	8 (2-1)	9 (2-2)

arr[0][2] = 10

row col

1

arr[0][0] = 1
arr[0][1] = 2
arr[0][2] = 3

2

arr[1][0] = 4
arr[1][1] = 5
arr[1][2] = 6

arr[2][0] = 7
arr[2][1] = 8
arr[2][2] = 9

```
int row = sc.nextInt()
int col = sc.nextInt()

int arr[][] = new int[row][col]

for(i=0; i<row; i++)
    for(j=0; j<col; j++){
        arr[i][j] = sc.nextInt()
    }
}
```

}