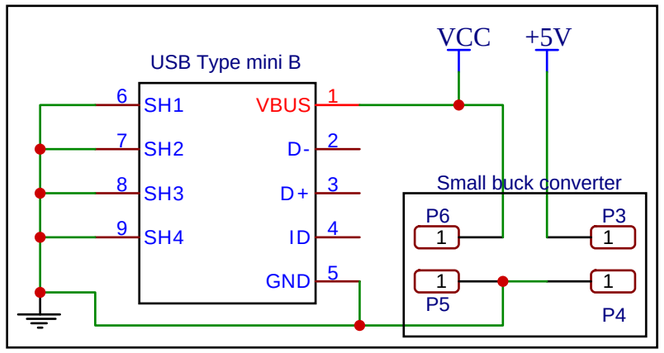

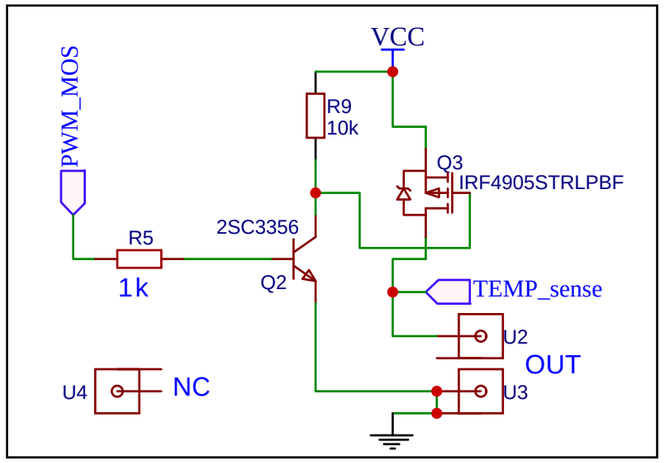

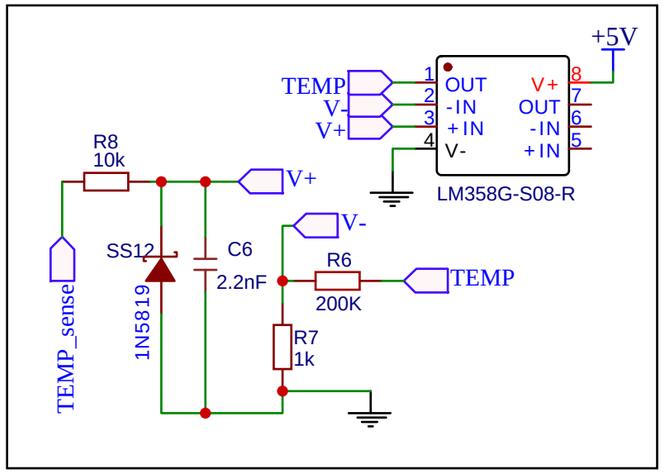

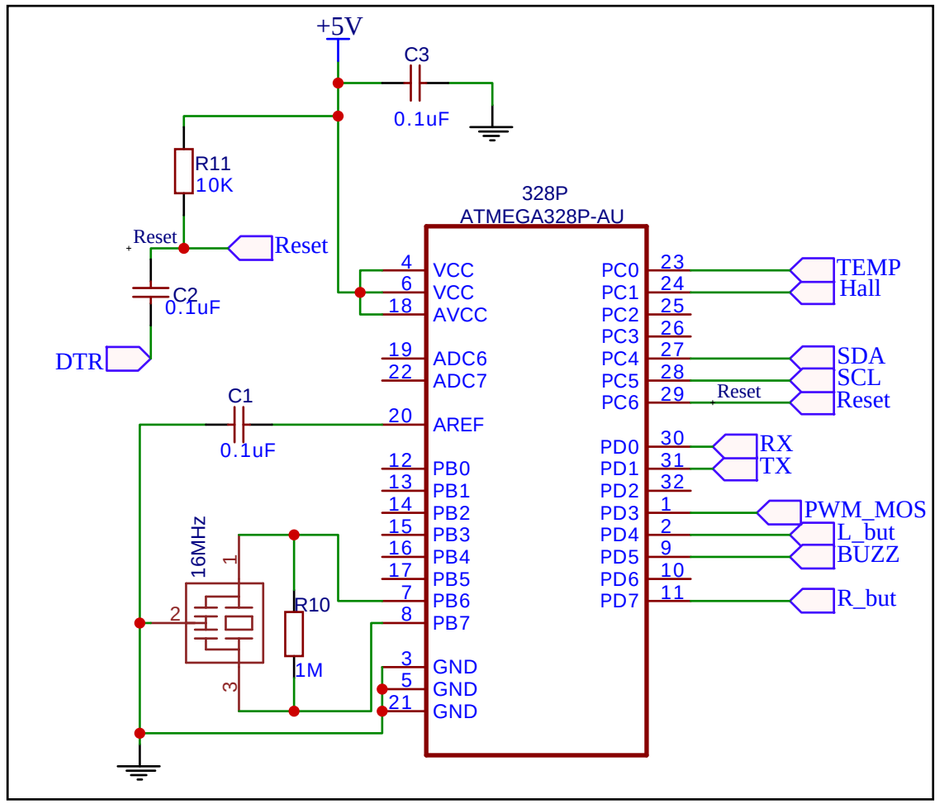

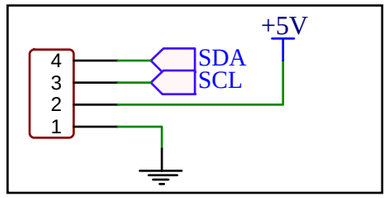

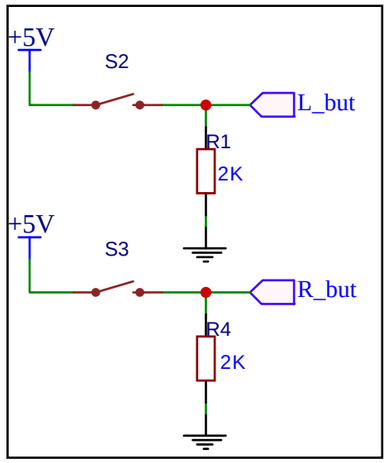

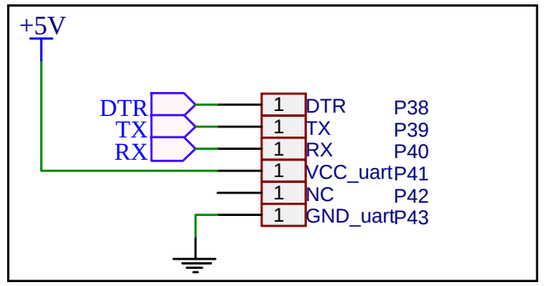

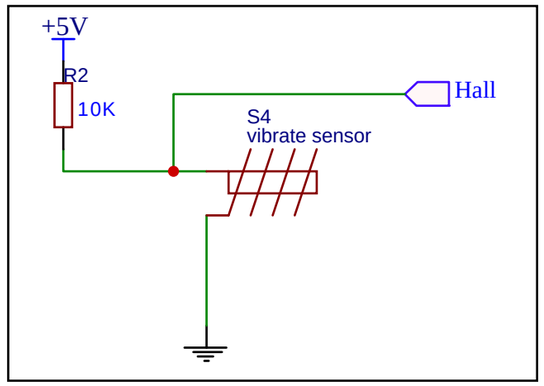

TITLE: Portable Soldering iron V3.1	REV: 1.0
Date: 2018-11-15	Sheet: 1/1
EasyEDA V5.4.12	Drawn By: Electronoobs