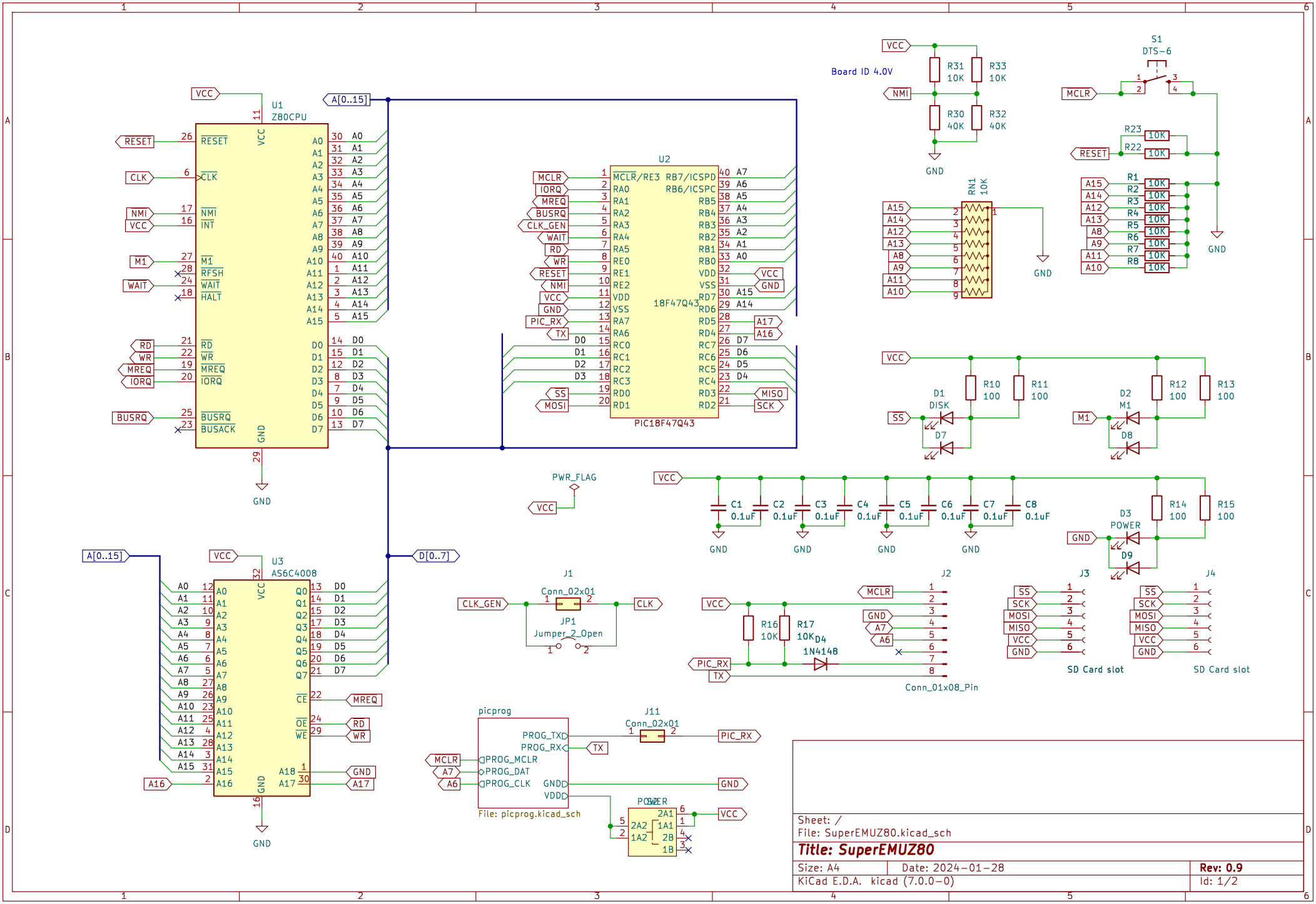
U1
Z80CPU
U2
PIC18F47Q43
18F47Q43
U3
AS6C4008
A[0..15]
D[0..7]
Board ID 4.0V
R31 10K
R33 10K
R30 40K
R32 40K
S1
DTS-6
RN1 10K
R1 10K
R2 10K
R3 10K
R4 10K
R5 10K
R6 10K
R7 10K
R8 10K
R23 10K
R22 10K
D1 DISK
D2 M1
D3 POWER
D4 1N4148
D7
D8
D9
R10 100
R11 100
R12 100
R13 100
R14 100
R15 100
C1 0.1uF
C2 0.1uF
C3 0.1uF
C4 0.1uF
C5 0.1uF
C6 0.1uF
C7 0.1uF
C8 0.1uF
PWR_FLAG
J1
Conn_02x01
JP1
Jumper_2_Open
J2
Conn_01x08_Pin
R16 10K
R17 10K
J3
SD Card slot
J4
SD Card slot
picprog
File: picprog.kicad_sch
J11
Conn_02x01
POWER
Sheet: /
File: SuperEMUZ80.kicad_sch
Title: SuperEMUZ80
Size: A4
Date: 2024-01-28
Rev: 0.9
KiCad E.D.A. kicad (7.0.0-0)
Id: 1/2

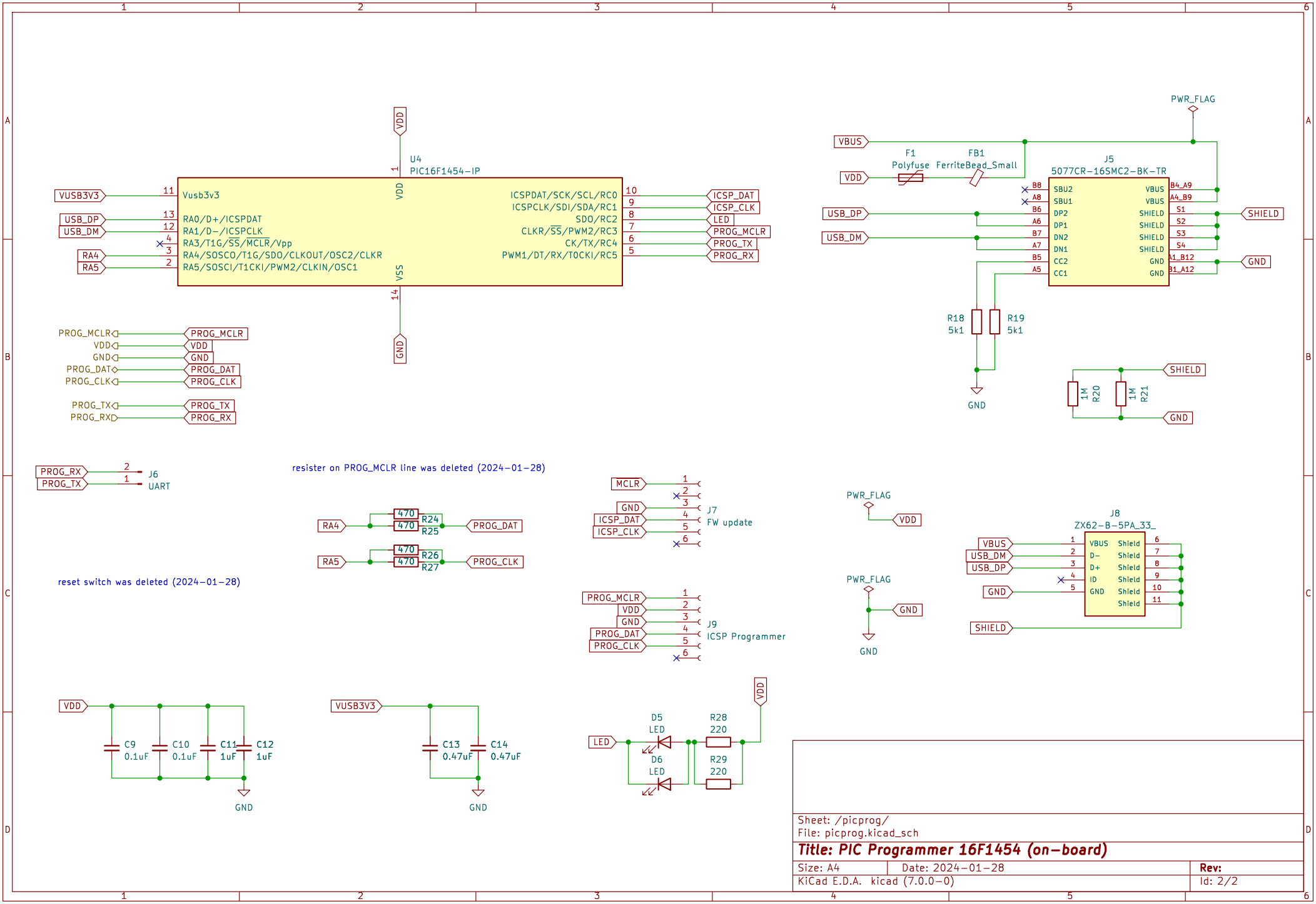

Sheet: /picprog/
File: picprog.kicad_sch

Title: PIC Programmer 16F1454 (on-board)

Size: A4	Date: 2024-01-28	Rev:
KiCad E.D.A. kicad (7.0.0-0)		Id: 2/2