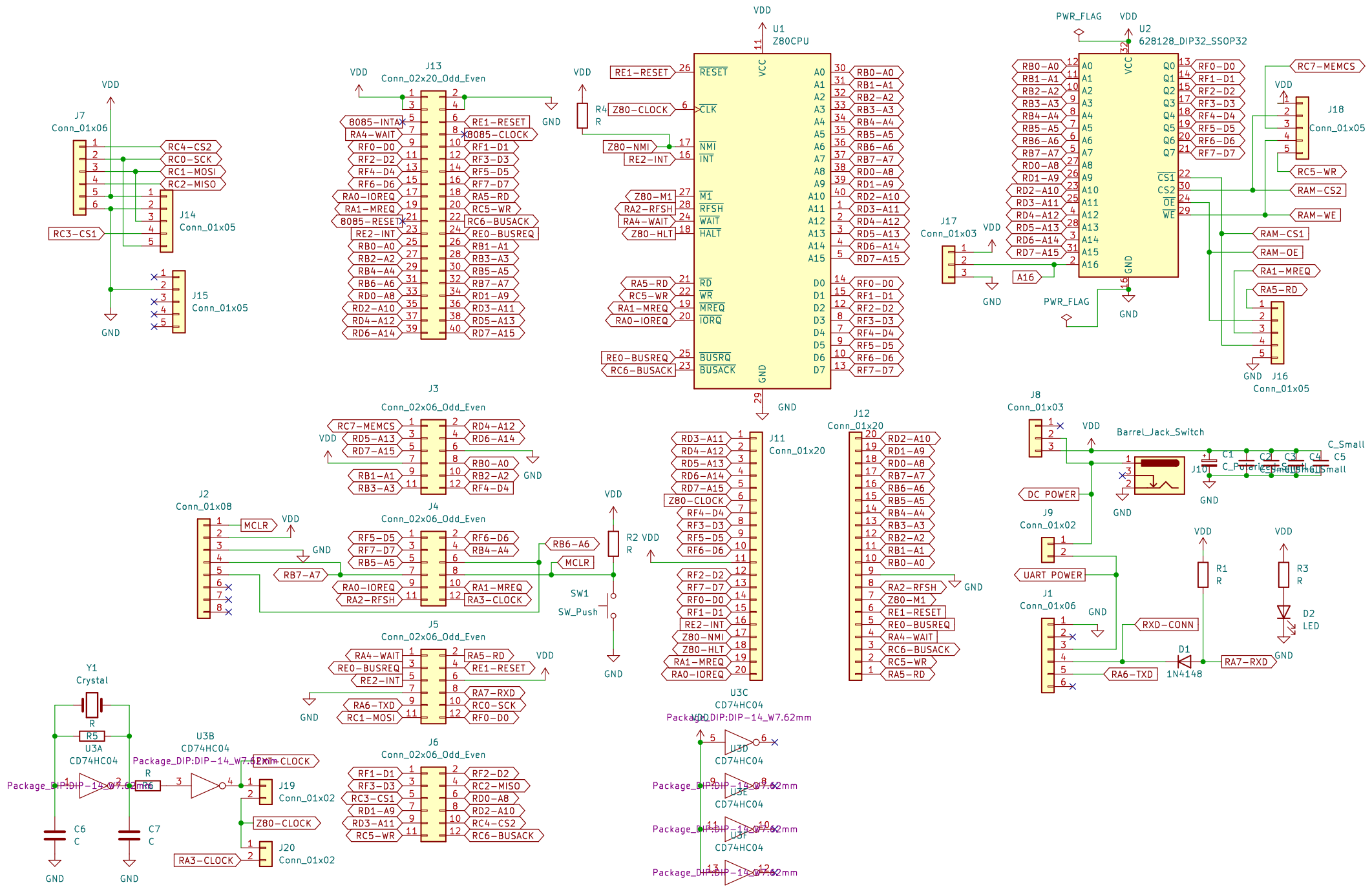
U1
Z80CPU
U2
628128_DIP32_SSOP32
J7
Conn_01x06
J14
Conn_01x05
J15
Conn_01x05
J13
Conn_02x20_Odd_Even
J18
Conn_01x05
J16
Conn_01x05
J17
Conn_01x03
J3
Conn_02x06_Odd_Even
J4
Conn_02x06_Odd_Even
J5
Conn_02x06_Odd_Even
J6
Conn_02x06_Odd_Even
J2
Conn_01x08
J11
Conn_01x20
J12
Conn_01x20
J8
Conn_01x03
J9
Conn_01x02
J1
Conn_01x06
J10
Barrel_Jack_Switch
J19
Conn_01x02
J20
Conn_01x02
Y1
Crystal
U3A
CD74HC04
U3B
CD74HC04
U3C
CD74HC04
U3D
CD74HC04
U3E
CD74HC04
U3F
CD74HC04
SW1
SW_Push
D1
1N4148
D2
LED
R1
R
R2
R
R3
R
R4
R
R5
R
R6
R
C1
C2
C3
C4
C5
C6
C
C7
C
VDD
GND
PWR_FLAG
DC POWER
UART POWER
RXD-CONN
RA6-TXD
RA7-RXD
RC4-CS2
RC0-SCK
RC1-MOSI
RC2-MISO
RC3-CS1
8085-INTA
RA4-WAIT
RF0-D0
RF2-D2
RF4-D4
RF6-D6
RA0-IOREQ
RA1-MREQ
8085-RESET
RE2-INT
RB0-A0
RB2-A2
RB4-A4
RB6-A6
RD0-A8
RD2-A10
RD4-A12
RD6-A14
RE1-RESET
8085-CLOCK
RF1-D1
RF3-D3
RF5-D5
RF7-D7
RA5-RD
RC5-WR
RC6-BUSACK
RE0-BUSREQ
RB1-A1
RB3-A3
RB5-A5
RB7-A7
RD1-A9
RD3-A11
RD5-A13
RD7-A15
Z80-CLOCK
Z80-NMI
Z80-M1
Z80-HLT
RF0-D0
RF1-D1
RF2-D2
RF3-D3
RF4-D4
RF5-D5
RF6-D6
RF7-D7
RC7-MEMCS
RAM-CS2
RAM-WE
RAM-CS1
RAM-OE
A16
MCLR
RA3-CLOCK
RD3-A11
RD4-A12
RD5-A13
RD6-A14
RD7-A15
Z80-CLOCK
RF4-D4
RF3-D3
RF5-D5
RF6-D6
RF2-D2
RF7-D7
RF0-D0
RF1-D1
RE2-INT
Z80-NMI
Z80-HLT
RA1-MREQ
RA0-IOREQ
RD2-A10
RD1-A9
RD0-A8
RB7-A7
RB6-A6
RB5-A5
RB4-A4
RB3-A3
RB2-A2
RB1-A1
RB0-A0
RA2-RFSH
Z80-M1
RE1-RESET
RE0-BUSREQ
RA4-WAIT
RC6-BUSACK
RC5-WR
RA5-RD
C_Small
C_Polarized_Small