이산화탄소 습식 흡수 과정에서 발생하는 아민 농축 폐수의 처리 공정 최적화에 대한 연구

석한이 • 정다성

Process Optimization for Treatment of Amine-Rich Wastewater Generated from Wet Carbon Capture

Han Yi Seok • Da Seong Jeong

ABSTRACT

Amine-rich wastewater (ARWW) is a major byproduct generated during the repeated absorption and regeneration cycles of wet carbon capture systems. As of 2024, there are no clear regulations governing ARWW discharge, making its effective treatment a critical challenge for sustainable carbon capture operations. This study aimed to optimize the removal of monoethanolamine (MEA), a primary toxic component of ARWW, by integrating electrochemical oxidation with coagulation and adsorption processes. The MEA removal mechanism was analyzed based on the concentration changes of total nitrogen, ammonium nitrogen, and nitrate nitrogen. The experimental results indicated that nitrate nitrogen was not detected, suggesting that MEA was not fully oxidized to nitrogenous compounds. Under the alkaline conditions of the experiment (pH 10.7), ammonium nitrogen likely existed primarily as NH3 gas, which may have been stripped from the solution, while intermediate byproducts were removed through the formation of metal hydroxide flocs and adsorption onto granular activated carbon (GAC). Additionally, the effects of key process variables, including initial wastewater concentration, electrode type, electrode spacing, activated carbon dosage, voltage, and raw water temperature, were systematically analyzed. The results showed that activated carbon dosage, raw water temperature, and electrode material were the most influential factors for MEA removal, while electrode spacing had little impact. This study demonstrates that a combined process of electrochemical oxidation and coagulation/adsorption is an effective method for ARWW treatment. However, further studies using real ARWW samples are needed to more precisely evaluate the formation and removal mechanisms of intermediate byproducts and optimize the overall process.

I. Introduction

The increase in energy consumption due to industrialization has led to environmental degradation and greenhouse gas emissions, which have contributed to the problem of climate change. To reduce CO2 emissions, the main cause of global warming, countries around the world are exploring various policies and technologies and carbon capture and storage (CCUS) technology has been attracting attention as a promising way to reduce greenhouse gases in parallel with fossil fuel use. In particular, the amine-based wet absorption process is currently the most widely utilized CCUS technology due to its high efficiency and cost-effectiveness, in which CO2 is chemically absorbed by an amine-based solvent from emissions and then heated and regenerated for repeated use.

However, impurities accumulate during this absorbent cycle, resulting in amine-rich wastewater (ARWW). ARWW contains nitrogenous toxins such as ammonia, nitrosamine, and nitramine, which can cause serious harm to humans and ecosystems if left untreated. Therefore, safe treatment of ARWW is an essential challenge for the environmental feasibility of wet carbon capture. Ion exchange, activated carbon adsorption, reverse osmosis, advanced oxidation process (AOP) have been studied as treatment options for ARWW, but research is limited, and it is difficult to achieve sufficient efficiency and economics with existing methods.

Therefore, this study reviews various experimental factors for efficient treatment of ARWW and proposes optimal treatment conditions. This study aims to optimize the process conditions for effective treatment of ARWW by combining electrochemical oxidation process with a secondary adsorption/flocculation process. To this end, a laboratory-scale electrolytic cell was fabricated, and the treatment performance was evaluated under various conditions such as current and temperature using MEA wastewater, a representative amine-rich wastewater (ARWW). In particular, the difference in effectiveness of physical flocculation vs. pure electrooxidation was analyzed by comparing Ti, SUS, and Al, which have different reaction mechanisms, as electrode materials. In addition, experiments powdered activated carbon (PAC) and granular activated carbon (GAC) were conducted to verify the need for adsorption support and to derive the optimal dosage. In addition, factors such as voltage, electrode spacing, raw water concentration, and temperature were individually varied to compare the MEA removal rate, and significant factors were selected by analysis of variance. The process stability was also examined through continuous operation for a long time under optimal conditions. This study aims to provide design guidelines for electrochemical oxidation-based ARWW treatment processes and contribute to the safe management of carbon capture plant effluent and reduction of environmental impacts.

II. Theoretical background

2.1 Carbon Neutral

Carbon neutrality refers to minimizing the emissions of greenhouse gases that cause climate change,

and minimizing their impact on the planet by offsetting emissions through sinks. Since the industrial revolution, fossil fuel use has increased dramatically, causing atmospheric carbon dioxide concentrations to rise from 285 ppm in the mid-19th century to 419 ppm in early 2022, a major contributor to a 1.1 ℃ increase in global average temperature compared to pre-industrial times (Jai-chul Choi, 2022). To address this, the international community has been negotiating various climate change responses, including the United Nations Framework Convention on Climate Change (UNFCCC), the Kyoto Protocol, and the Paris Agreement.

The United Nations Framework Convention on Climate Change (UNFCCC), which entered into force in 1994, aims to "stabilize the concentration of greenhouse gases in the atmosphere" (Jai-chul Choi, 2022). The agreement requires all signatory countries to set targets for reducing greenhouse gas emissions, but the lack of legal binding has not resulted in substantial reductions.

To compensate for these limitations, the legally binding Kyoto Protocol came into effect in 2005 and imposed legal emission reduction obligations on industrialized countries and Annex I countries, as shown in Table 1. However, due to its compulsory nature, some major countries, such as Japan and Russia, did not participate, and it ended in 2020 without meeting its targets (Soo-hyun Jung, 2016).

Table 1. GHG reduction targets by Annex I countries (by 2012 relative to 1990 GHG emissions)

Goals	Goals Annex I countries
92 % (-8 %)	Austria, Belgium, Bulgaria, Czech Republic, Denmark, Estonia, European Community, Finland, France, Germany, Greece, Ireland, Italy, Latvia, Liechtenstein, Lithuania, Luxembourg, Monaco, Netherlands, Portugal, Romania, Slovakia, Slovenia, Spain, Sweden, Switzerland, United Kingdom
93 % (-7 %)	United States
94 % (-6 %)	Canada, Hungary, Japan, Poland
95 % (-5 %)	Croatia
100 %	New Zealand, Russia, Ukraine
101 % (+1 %)	Norway
108 % (+8 %)	Australia
110 % (+10 %)	Iceland

The 2015 Paris Agreement set three specific goals: to hold the global average temperature increase to well below 2 ℃ above pre-industrial levels, to promote adaptation and resilience to the adverse

impacts of climate change, and to channel financial flows towards low-carbon, climate-resilient development. It also agreed that all member states will voluntarily set their Nationally Determined Contributions (NDCs) and update them every five years (Jai-chul Choi, 2022).

Then, in 2018, the Intergovernmental Panel on Climate Change (IPCC) released its Special Report on Global Warming of 1.5 ℃, emphasizing that to keep global warming within 1.5 ℃, we need to reduce greenhouse gas emissions by 45 % below 2010 levels by 2030 and achieve net-zero carbon emissions by 2050 (Jai-chul Choi, 2022).

In 2021, South Korea held the Second Plenary Meeting of the 2050 Carbon Neutrality Committee, which revised the 2030 Nationally Determined Contribution (NDC) from 26.3 % to 40 % and finalized a specific scenario for achieving carbon neutrality by 2050. In 2023, the government released the Yoon Seok-yeol Government's Blueprint for Carbon Neutral Green Growth to Achieve Carbon Neutrality and Realize Green Growth in 2050 to strengthen detailed implementation policies to realize carbon neutrality.

2.2 How to Go Carbon Neutral

There are three main ways to mitigate GHGs: limiting future emissions by introducing renewable energy, using nature to absorb GHGs from the atmosphere, and CCUS technology (Hyeong-jun Hwang, 2023).

CCUS technology is a method of capturing greenhouse gases that are emitted and storing them for long-term storage or utilizing them as raw materials, and interest in CCUS technology is growing as there are realistic limits to how to limit future emissions and how to absorb greenhouse gases from the atmosphere. The capture and storage technology is called carbon capture and storage (CCS) and the capture and utilization technology is called carbon capture and utilization (CCU), and both technologies are collectively referred to as CCUS technologies. In general, the cost of carbon capture technology accounts for about 70~80 % of the total cost of CCS technology, and as can be seen, research on carbon capture technology is very active (Jung-ho Wee et al., 2008).

2.3 Carbon Dioxide Capture Technology

Carbon capture technology is the capture of large quantities of carbon dioxide from the combustion and processing of carbon energy. Depending on when the carbon dioxide is captured, it can be categorized into three types: post-combustion carbon capture, pre-combustion carbon capture, and carbon capture during combustion(Bae-hyun Min, 2021; Sang-hyeok Lee et al., 2022).

According to the forecast of global energy consumption structure released by the International Energy Agency (IEA) in 2019, the demand for fossil fuels is still expected to increase, and until the development of renewable energy to replace fossil fuels enters the mature stage, the stable use of fossil fuels is indispensable for the sustainable development of humanity, and the development of CCUS technology

is urgently needed. Domestic research and development of CCUS technology has been focused on capture technology, which can be broadly categorized into absorption, adsorption, and membrane separation methods (Bae-hyun Min, 2021).

2.3.1 Absorption Method

The absorption method is the most used method of carbon dioxide separation, which is a method of separating carbon dioxide in exhaust gas by absorbing it with a solution absorbent. It is characterized by the ability to reuse the absorbent through stripping and regeneration processes, and has the advantages of being easy to treat large amounts of post-combustion exhaust gas and being highly adaptable to changes in carbon dioxide concentration, but it also has the disadvantage of requiring high energy to regenerate the absorbent (Sang-hyeok Lee et al., 2022).

2.3.2 Adsorption Method

Adsorption is a method of adsorption and separation of carbon dioxide in exhaust gas using a solid-state adsorbent, and depending on the adsorption-desorption method, there are pressure alternating adsorption, which adsorbs at high pressure and desorbs at normal pressure, and thermal alternating adsorption, which desorbs the adsorbed carbon dioxide at high temperature. Adsorption methods have the advantage of being simple in device and operation compared to other methods, and are superior in terms of environmental impact and energy efficiency, but have the limitation of low efficiency for large-scale processing (Sang-hyeok Lee et al., 2022).

2.3.3 Membrane Separation Method

Membrane separation is a method that separates carbon dioxide by selectively passing it through a membrane. This method has a higher membrane separation efficiency than the absorption method, and lower device and operating costs when large-scale, but large-capacity difficult processing, high cost of membrane materials, and membrane fouling issues make them unsuitable for large-scale processing (Sang-hyeok Lee et al., 2022).

2.4 Amine-Based CO2 Capture

Among carbon dioxide capture technologies, wet absorption is a long-standing, commercialized, and proven technology that has a wide range of applications and is considered the most economical for large-scale processes. Amine-based CO2 Capture (ACC), currently the most commercialized wet absorption method, is considered a cost-effective post-combustion capture technology that utilizes the reaction of carbon dioxide with amine-based solvents (ABSs).

The high selectivity of the chemical reaction allows for effective capture of carbon dioxide even from low-concentration sources, and the amine solution has an excellent ability to absorb carbon dioxide,

resulting in high carbon dioxide removal rates. The ABS used in this case includes MEA (monoethanolamine), DEA (diethanolamine), and MDEA (N-methyl-diethanolamine), and MEA is mainly used because it is the most cost-effective.

As shown in Fig. 1, the ACC process captures carbon dioxide through the steps of a condenser, washwater unit, and reclaimer.

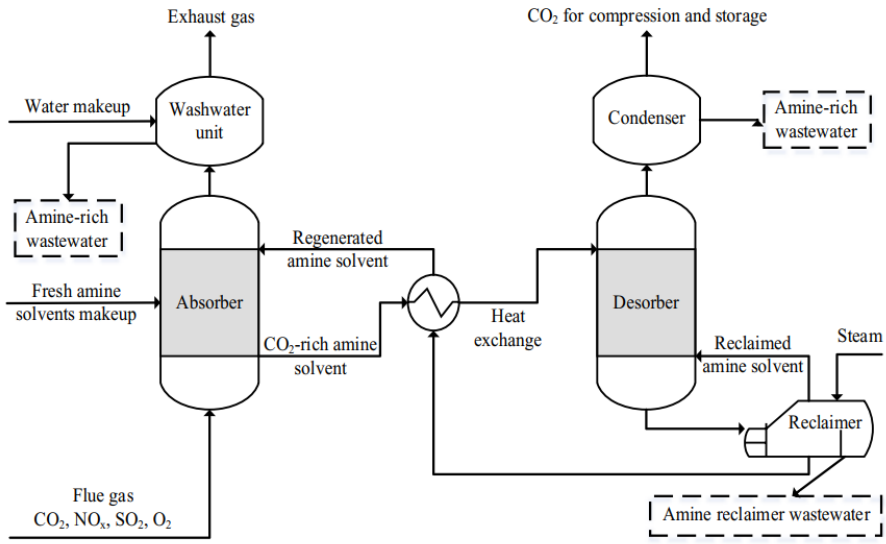

Fig. 1. Schematic of a typical ACC system.

2.4.1 Condenser

After combustion, the gas stream enters an absorber with a temperature of 38 ℃~49 ℃ and reacts with amine-based solvents (ABSs) to form a CO2-rich amine solvent. Assuming that the ABS is MEA, the relationship between MEA in aqueous solution and carbon dioxide in the gas phase is a reversible reaction (Dai & Mitch, 2015). In this case, the reverse reaction in the equation (1) is triggered by high temperature.

The CO2-rich amine solvent produced in the absorber moves to the desorber, where it is prepared for reverse reaction by high temperatures of 93 ℃~127 ℃, and then the full-scale reverse reaction takes place in the Condenser located at the top of the desorber. The high temperature causes the CO2-rich amine solvent to separate into MEA, water, and CO2, and the water and various volatile mixtures to rise to the condenser.

$$2HOCH_2CH_2NH_2 + H_2O + CO_2 \rightleftarrows (HOCH_2CH_2NH_3^+)_2CO_3^{2-} \quad (1)$$

2.4.2 Washwater Unit

In the absorber stage, the residual gases remaining after the production of the CO2-rich amine solvent are passed through the washwater unit to reduce the emissions of the amine solution and its degradation products before being released to the atmosphere.

2.4.3 Reclaimer

After moving from the desorber stage to the Reclaimer, ABS removes various degradation products and reclaims them back to the system. It is reused by the Absorber (Nwaoha et al., 2017).

2.5 Toxins from the ACC Process

The ACC process, based on amine solutions, is an efficient CO2 capture technology, but it has technical challenges, including the potential to generate environmentally hazardous substances (Yoon-je Lee et al., 2023). Amine-rich wastewater (ARWW) is generated in the condenser, washwater unit, and reclaimer stages of the ACC process. ARWW has been found to contain substances that are harmful to human health, such as carbamate polymers, heat-stable salts (HSS), nitrosamine, nitramine, and ammonia. Toxicologically, nitrosamine and nitramine can be carcinogenic and mutagenic even when present in very small amounts (Fjellsbø et al., 2014).

Accordingly, internationally, the UNFCCC and OECD Guidelines emphasize the safe disposal of wastewater and waste generated by CCS technology, but as of 2024, Korea has not yet set specific environmental regulations for ARWW. In addition, there is a lack of monitoring data due to the lack of standardized technology to monitor toxic substances such as nitrosamines, making it difficult to conduct risk assessments related to them.

ARWW from the ACC process is discharged from condensers, washers, and regenerators without any treatment, which can adversely affect the water environment and human health. Toxic substances in ARWW reach water resources directly without any treatment, making water contamination by ARWW the main environmental threat associated with ACC (Samnani & Young, 2023).

In ARWW, there is nitrosamine which includes N-Nitrosodimethylamine (NDMA) and N-Nitrosodiethylamine (NDEA), and there are also nitramine and ammonia which include 2-Methoxyethyl Methacrylate (MTMA), dodecyltrimethylammonium (DTMA). Nitrosamine and nitramine are classified by the International Agency for Research on Cancer (IARC) as Group 2A potential carcinogens and are mutagenic, meaning they have been shown to cause mutations at certain concentrations. In particular, NDMA and NDEA have strong carcinogenic potential. Ammonia can react with NO_x to cause acid rain when emitted into the atmosphere, and can cause eutrophication when fed into water resources, which can adversely affect ecosystems through algae blooms and algal blooms.

In this regard, exposure of rats to MEA degradation products resulted in an increase in inflammatory cells such as neutrophils and lymphocytes in the experimental group compared to the control group, an increase in immune proteins and cytokines (GRO-KC, MCO-1, GM-CSF) in the lungs, and lung tissue damage and oxidative stress responses (Rohr et al., 2013).

2.6 Conventional Absorbent Wastewater Treatment Process

Treatment options for ARWW are not yet commercialized or remain at the laboratory level (Dong et al., 2019). Typical treatment options for ARWW that are currently being studied or used include ion exchange, AOP, RO, AC, and NOx scrubbers.

2.6.1 Ion Exchange

Ion exchange is the removal and recovery of targeted cations or anions using an ion exchange resin. In ACC, it is used to remove degradation products so that the ABS can be reused in the Reclaimer.

Fig. 2 shows how ion exchange works. In ion exchange, the target ions are adsorbed in the ion exchange resin through a reaction with the resin, and the exchanged ions are released in the regeneration step. This principle makes the ion exchange method an advantageous continuous process because the resin can be reused through regeneration and cleaning (Jong-hyuk Kang, 2020).

In ion exchange, the type of resin determines the ion exchange capacity. The types of ion exchange resins are first divided into cationic and anionic resins, which are further divided into strong acidic, weak acidic, strong basic, and weak basic.

Strong acid cationic resins are the most effective resins for ARWW treatment due to their high selectivity for amines and ammonia. However, the ion exchange process is not suitable as an ARWW treatment method because there is still a lack of sophisticated technology to treat the concentrates during the regeneration and cleaning stages of the ion exchange process (Samnani & Young, 2023). Therefore, additional ion exchange process development is needed.

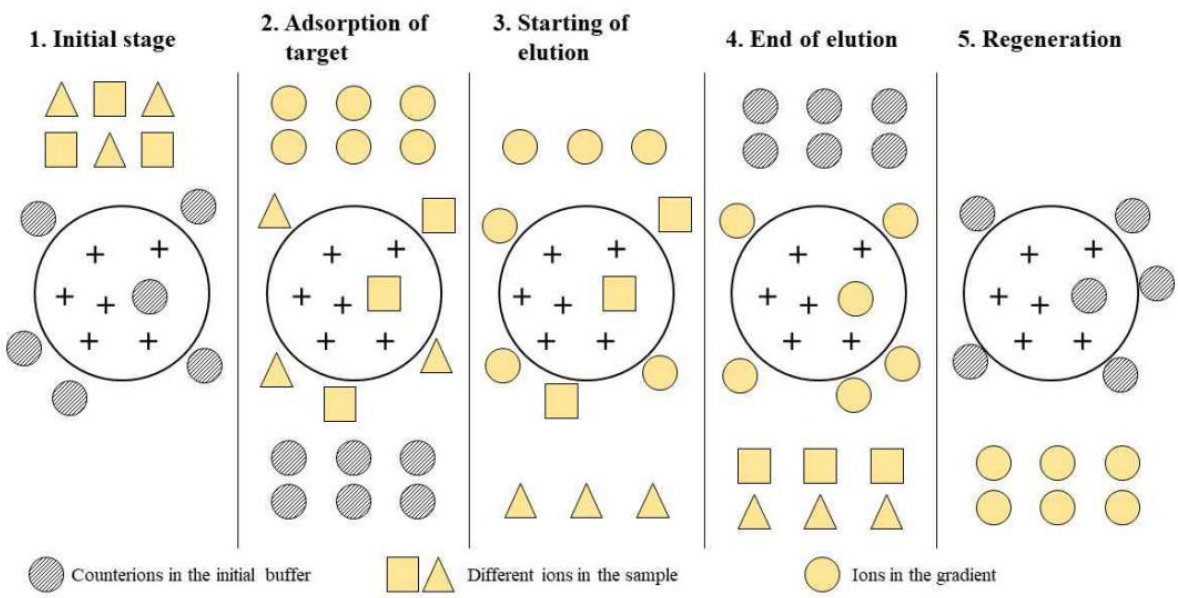

Fig. 2. Phase of ion exchange chromatography

2.6.2 Advanced Oxidation Process (AOP)

The AOP process is an ARWW treatment method that utilizes UV photolysis and ozone (O3) degradation to treat ARWW generated in the washwater unit stage of the ACC process. As shown in Fig. 3, wastewater from the washwater unit first enters the medium-pressure-UV-leading photolysis of nitrosamines (MPUV), then ozone generator to remove organic and inorganic compounds using ozone.

After the AOP process, the ARWW is used as wash for the washwater unit (Dai & Mitch, 2015). UV photolysis is an effective method for removing nitrosamine from contaminated water, such as wastewater. Ozone decomposition is also effective for organic and inorganic compounds, as shown in previous studies (von Gunten, 2003). Studies have shown that the AOP process can remove Nitrosamine and NDEA with a 99 % removal rate in 15 minutes and experimental results show that ozone degradation is more efficient than UV photolysis for the degradation of amines (Samnani & Young, 2023).

Therefore, the AOP process can be used to remove nitrosamine, nitramine, aldehydes, and amine with high efficiency, but further research is needed for the treatment of various Nitrosamine substances and other harmful substances before AOP can be applied to the overall ACC process.

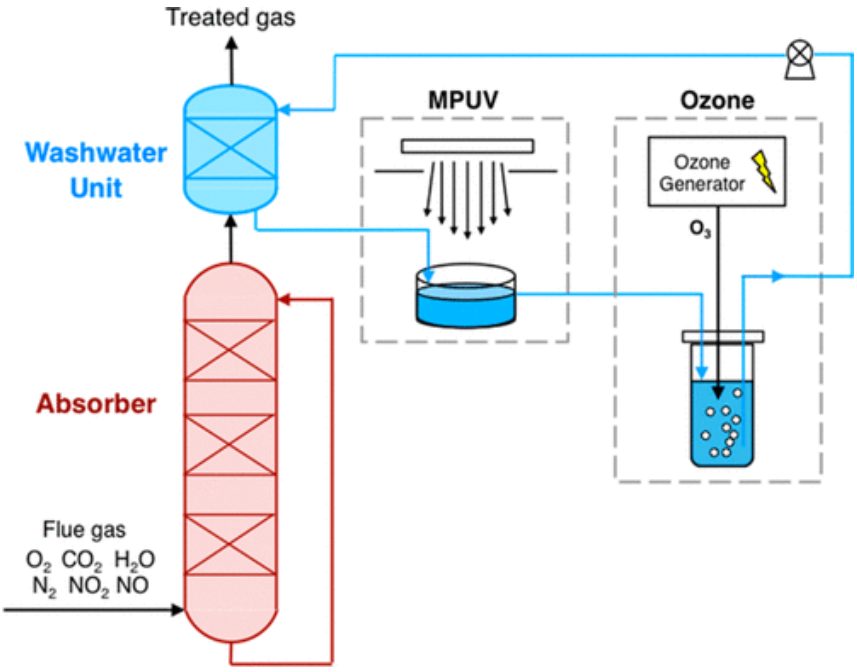

Fig. 3. Schematic of a typical Advanced oxidation process.

2.6.3 Reverse Osmosis (RO)

Reverse osmosis (RO), the opposite of osmosis, is a phenomenon in which a pressure higher than the osmotic pressure is applied to a highly concentrated solution, causing the solvent in the highly concentrated solution to pass through a reverse osmosis membrane into a less concentrated solution.

The RO process using this reverse osmosis phenomenon is characterized by the need for high pressure (Chae-hyun Kim, n.d.). Reverse osmosis membranes have been continuously used for seawater

desalination because they can effectively remove dissolved substances, ions, and salts from water and they are also effective in removing inorganic salts and trace organic chemicals (Alaei Shahmirzadi & Kargari, 2018). In the case of nitrosamine, a carcinogen present in ARWW, the removal rate increased with increasing molecular size in the RO process. Therefore, NDMA, the smallest molecule of nitrosamine, has a low removal rate in the RO process (Dong et al., 2019).

If ARWW is treated with RO alone, NDMA is hardly removed, so additional processes such as UV photolysis or ozonolysis should be added. However, the conditions to be considered for combining RO and UV photolysis processes (e.g., temperature, pH, etc.) are still unclear and are being studied on a laboratory scale (Dong et al., 2019).

2.6.4 Activated Carbon (AC)

Activated carbon is a typical adsorbent used to remove organic and inorganic pollutants in wastewater treatment, and activated carbon can be categorized into granular activated carbon (GAC) and powdered activated carbon (PAC) according to its physical shape, such as particle size and surface pore structure. PAC refers to activated carbon with a particle size of 100 mesh (150 μm) or less, and BAC (Biological Activated Carbon) is a combination of GAC and microbial activity. BAC refers to activated carbon which is colonized by microorganisms in the pores of GAC to achieve both physical and biological adsorption. The utilization of BAC has been proven to be effective in the removal of nitrosamine (Liao et al., 2015).

Fig. 4 shows a schematic diagram of the process of filtering and treating amines and harmful substances by passing ARWW from the washwater unit through a carbon bed filled with activated carbon (Dong et al., 2019). However, it has been confirmed that no research has been conducted on the application of biological activated carbon to the ACC process, and therefore, further research using BAC is needed.

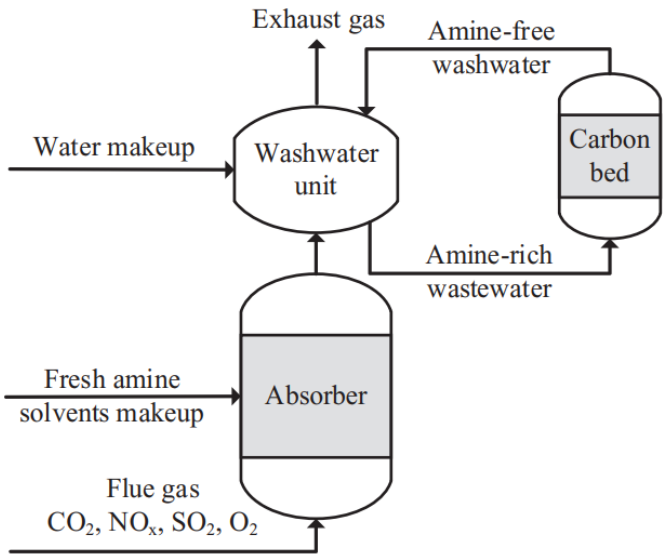

Fig. 4. Schematic of a typical carbon system.

2.6.5 NO_x scrubber

The NO_x scrubbing method is a NO_x treatment method which utilizes selective noncatalytic reduction (SNCR) to treat the ARWW generated by Reclaimer. The main decomposition products of wastewater from the reclaimer are ammonia and nitrogen-containing substances, making it suitable for the application of SNCR to reduce NO_x emissions. The process of applying a NO_x scrubber is shown in Fig. 5. Assuming that the wastewater generated by the reclaimer is decomposed, a gas mixture containing NO, O_2, and N_2 is placed vertically with a quartz reactor. The quartz reactor is equipped with three different heating devices using electricity.

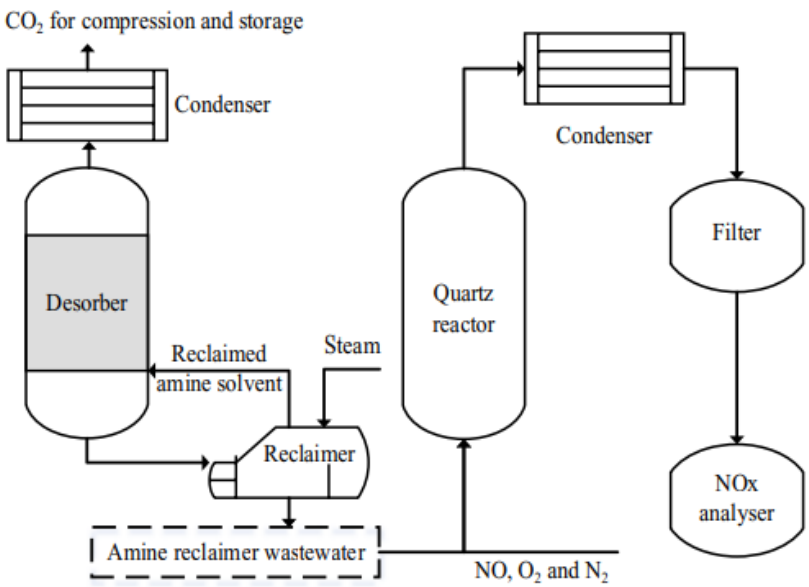

Fig. 5. Schematic of a typical Nox Scrubber system

Previous studies have shown that the more ARWW with a TN/NO ratio greater than 1, the greater the NO_x reduction effect in the above model. In laboratory-scale experiments conducted in a quartz reactor at 950 °C, a TN/NO ratio of 1.6 resulted in a 40 % reduction in NO_x, and a TN/NO ratio of 8.5 resulted in a 96 % reduction in NO_x. In general, wastewater from reclaimer can be expected to reduce NO_x by 20 % by applying the NO_x scrubber method, but further research is needed from various aspects such as cost-effectiveness and environmental perspective before application.

III. Research Methods

3.1 Research Materials

3.1.1 Raw Water

In this study, an ARWW of 586,600 ppm was used, which was prepared by diluting 99 % of DAEJUNG's Monoethanolamine in distilled water, based on the ARWW concentration in a previous study (Hauser et al., 2013). Monoethanolamine 296.26 mL was added twice with distilled water to a volume of 500 mL, resulting in a raw water of 586,600 ppm at an initial concentration of 99 %.

3.1.2 Research Devices

Fig. 6. shows a schematic of the reactor used in this study.

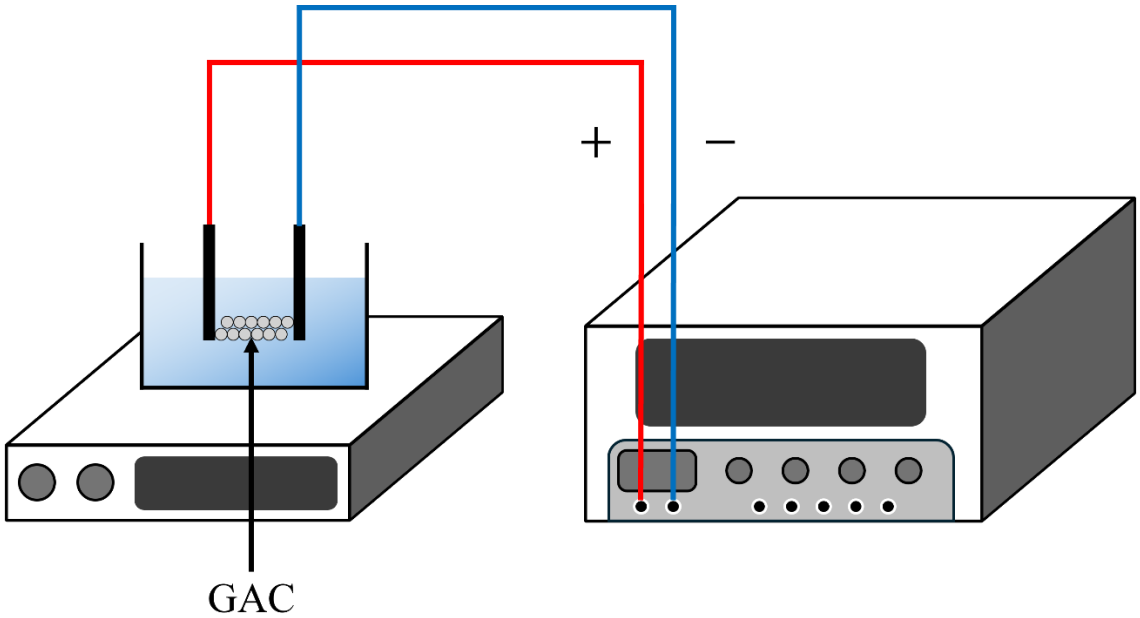

Fig. 6. The reaction bath used in the experiment

The power supply is a PS280 model of Tektronix, with a voltage range of 0 to 30 V and a current range of 0 to 2 A. Fig. 7 shows the water bath used in this study, which is made of acrylic (5 mm thick) and has dimensions of 150 mm in length, 50 mm in width, and 100 mm in height.

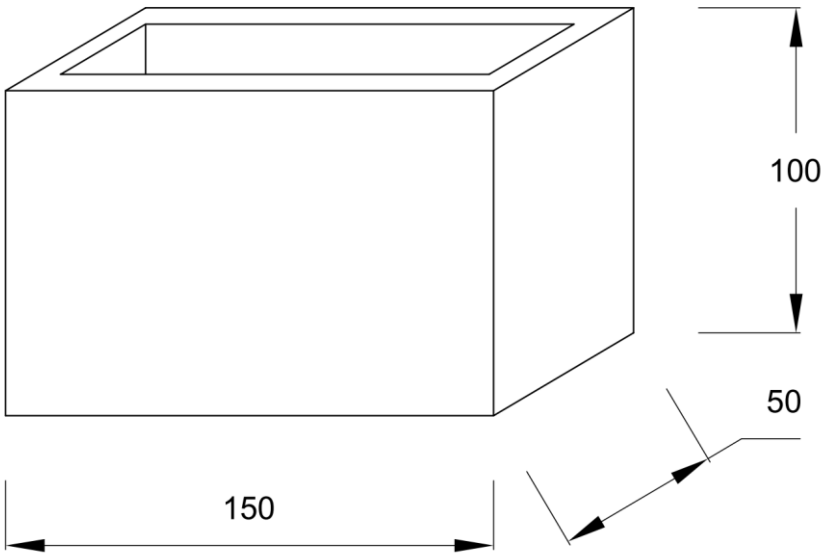

Fig. 7. The water bath used in the experiment

Fig. 8. shows the electrode plates used in this study, and the electrode plate design uses stainless (SUS), titanium (Ti), and aluminum (Al) electrode plates with a thickness of 3 mm, a width of 48 mm, and a length of 100 mm.

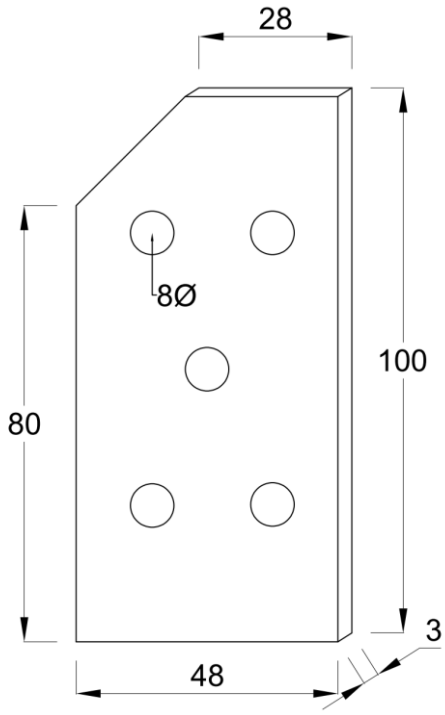

Fig. 8. The electrode plates used in the experiment

3.2 Study Methods and Conditions

3.2.1 Research Methods

All experiments were conducted at approximately 25 °C, and the magnetic bar was added and stirred during the experiment to ensure that the concentration of the raw water was uniform. The electrodes were unified with the same material at both anodes and a voltage was applied through the power supply. At intervals of 1, 5, 15, 30, 60, and 120 minutes, 30 mL of raw water was sampled, and 3 drops of green and red indicator were added to 5 mL of sampled raw water. The HCl solution was titrated to calculate the MEA concentration and removal rate.

3.2.2 Study conditions

In this study, the current of the power supply was 3 A, the type of electrolyte was Na2S2O8, the amount of electrolyte was 0.12 g, the volume of raw water was 500 mL, the stirring speed was 300 rpm, and the pH was fixed at 10.7. The manipulated variables were the type of electrode, concentration of raw water, amount of activated carbon, voltage, spacing of electrodes, and temperature of raw water. To examine the removal efficiency changes under different conditions, experiments were conducted by modifying one factor at a time, and subsequently, the optimal conditions were determined for further

experiments. The experimental conditions are summarized in Table 2.

Table 2. Experimental Conditions

Variables	Conditions
Raw water concentration (mM)	19.20, 38.41, 96.00
Electrode Types	SUS, Ti, Al
Activated carbon dosage (g)	10, 25, 50
Voltage (V)	10, 20, 30
Electrode spacing (cm)	1, 3, 5
Raw water temperature (°C)	25, 50, 90

3.3. Experimental Design

3.3.1. Analysis of MEA Removal Mechanism

In this study, the experimental design phase included the measurement of total nitrogen, ammonium nitrogen, and nitrate nitrogen to analyze the MEA removal mechanism. Organic nitrogen compounds, including MEA, typically undergo a series of degradation processes, starting with mineralization to ammonium nitrogen, followed by oxidation to nitrate nitrogen, ultimately forming nitrate as the final nitrogenous compound. However, the experimental results showed that only ammonium nitrogen was detected, while nitrate nitrogen was not. Given that this study employed a combined removal process involving electrochemical oxidation and adsorption/coagulation, the MEA removal mechanism was analyzed as follows.

3.3.2. Electrochemical Removal

In the electrochemical process using Na2S2O8 as the electrolyte, a strong oxidizing agent is generated through electrode reactions. Electrochemical reactions can be divided into anodic (oxidation) and cathodic (reduction) processes. At the anode, persulfate ions receive electrons to produce sulfate radicals, as shown in the following reactions. At temperatures above 60°C, these persulfate ions can decompose spontaneously without receiving electrons:

$$S_2O_8^{2-} \longrightarrow 2SO_4^{\cdot-} + 2e^- \tag{2}$$

$$S_2O_8^{2-} \longrightarrow 2SO_4^{\cdot-} \tag{3}$$

Additionally, at the anode, water oxidation generates hydroxyl radicals, which can indirectly activate persulfate, forming sulfate radicals as follows (Koiki et al., 2023):

$$H_2O \longrightarrow \cdot OH + H^+ + e^- \tag{4}$$

$$\cdot OH + S_2O_8^{2-} \longrightarrow SO_4^{\cdot -} + SO_4^{2-} + H^+ \tag{5}$$

These sulfate and hydroxyl radicals possess high oxidation potentials, allowing them to attack the molecular bonds of organic pollutants effectively. In particular, they can efficiently oxidize the -NH2 amino group in MEA (Chen et al., 2019). This oxidation process breaks the bonds between carbon and nitrogen within the MEA molecule, releasing the amino group as a radical (NH2), which rapidly converts to ammonia in aqueous solution. The ammonia then accepts protons to form ammonium ions, which were detected as ammonium nitrogen in the experimental measurements. Previous studies have also confirmed that ammonium ions are the primary nitrogen-containing byproducts from the degradation of MEA, indicating that the organic nitrogen in MEA primarily converts to ammonium nitrogen (Khan et al., 2024).

At the cathode, the primary reaction involves the reduction of water, resulting in the formation of hydrogen gas and hydroxide ions, as shown below:

$$2H_2O + 2e^- \longrightarrow H_2(g) + 2OH^- \tag{6}$$

This reaction leads to a local increase in pH due to the generation of hydroxide ions, which can indirectly influence the MEA removal process by promoting ammonia volatilization and maintaining electrochemical equilibrium. However, the primary pathway for MEA removal in this study is through oxidation, which converts MEA to ammonium nitrogen, not nitrate nitrogen.

Additionally, the reduction pathways for organic molecules containing nitrogen, such as MEA, are highly limited under typical electrochemical conditions. In general, organic compounds are much more susceptible to oxidation than reduction, and this is particularly true for nitrogen-containing compounds. Given this, the study appropriately focused on anodic oxidation as the primary removal mechanism, with the cathodic reduction reactions playing a relatively minor role.

3.3.3 Electrocoagulation

During the electrochemical reaction, metal ions are released from the anode. These metal ions rapidly react with hydroxide ions in the water to form coagulating flocs as follows:

$$M^{n+} + nOH \longrightarrow M(OH)_n \tag{7}$$

Hydroxide flocs are porous, positively charged colloids that adsorb contaminants from the solution onto their surfaces or entrap them within their structures, resulting in co-precipitation. According to previous studies, metal hydroxides released from electrodes effectively adsorb and remove organic contaminants (Marmanis et al., 2022).

3.3.4. Adsorption

In the design stage related to activated carbon, both PAC (Powdered Activated Carbon) and GAC (Granular Activated Carbon) were considered. There are physical differences between PAC and GAC that lead to differences in their adsorption capacities. PAC is less suitable for adsorbing large particle contaminants, while GAC, with its large, rigid structure, is more effective for removing large particulate contaminants.

When comparing the MEA removal efficiencies, it was confirmed that no removal occurred when PAC was used, while significant removal was observed with GAC. If the primary removal mechanism is flocculation, where contaminants are pulled into the internal structure of hydroxide flocs formed by hydrolysis, adsorption refers to the process in which contaminants adhere to the surface of the activated carbon. In particular, intermediate byproducts with relatively large sizes, formed as MEA decomposes, are well adsorbed in the fine pores of GAC (Graça & Rodrigues, 2022). However, in the case of ammonium compounds, their high polarity and small size limit the physical adsorption efficiency on activated carbon. Therefore, recent studies have focused on metal impregnation of activated carbon to enhance its adsorption capacity for ammonium compounds (Kabuba & Lephallo, 2023).

3.3.5 Electrochemical Oxidation and Adsorption/Coagulation Hybrid Process

As a result, the MEA removal mechanism without detectable nitrogenous compounds was clarified as follows:

First, through electrochemical oxidation, MEA is converted into ammonium compounds and intermediate byproducts. According to the ammonia/ammonium equilibrium, when the pH exceeds 9.25, ammonium ions can be converted into ammonia gas and released into the atmosphere (Galles, 2011). In this experiment, the pH of the raw water was 10.7, suggesting that most of the ammonium compounds likely existed in the form of NH_3.

During the treatment process, continuous stripping likely played a major role in the removal of ammonium compounds, which aligns with the experimental results that showed no detectable nitrogenous compounds. This indicates that prior to being fully converted to nitrogenous compounds, the ammonium compounds were predominantly removed via stripping under the given experimental conditions.

Regarding the intermediate byproducts, it is believed that metal ions dissolved from the anode formed metal hydroxides through hydrolysis, which were subsequently removed through the adsorption and co-precipitation reactions with GAC.

In conclusion, the MEA was converted into ammonium compounds and organic byproducts through oxidation, and before these ammonium compounds could reach the final stage of complete nitrification, they were primarily removed as ammonia gas. Meanwhile, the organic byproducts were removed through adsorption and co-precipitation with GAC and hydroxide flocs.

3.4. Processing Statistics

The experimental data obtained in this study were analyzed to verify the significance of differences in MEA removal efficiency under various experimental conditions. A one-way ANOVA was performed, followed by a post hoc Tukey HSD test if necessary. The analysis included six experimental conditions: initial water concentration, electrode material, activated carbon dosage, voltage, electrode spacing, and water temperature. The MEA removal efficiency was measured after 120 minutes, with a significance level (α) set at 0.05.

IV. Research findings and reflections

4.1 Raw water concentration

Comparing the removal rates of diluting the raw water to concentrations of 96.00 mM, 38.41 mM, and 19.20 mM, the dilution of the raw water to a concentration of 96.00 mM resulted in a concentration of 5503.60 mg/L at 0 minutes, followed by a concentration of 2384.89 mg/L at 120 minutes with a removal rate of 56.67 % over time. When the raw water was diluted to a concentration of 38.41 mM, it showed a concentration of 2091.37 mg/L at 0 minutes, and a concentration of 819.42 mg/L at 120 over time. It showed a removal rate of 60.82 %. When the raw water was diluted to a concentration of 19.20 mM, the removal rate from 0 min to the initial concentration was 709.35 mg/L, which decreased over time to a concentration of 244.60 mg/L at 120 minutes, giving a removal rate of 65.51 %. The ANOVA results showed a p-value of approximately 0.02, which is less than the 0.05 significance level, statistically validating the trend of increasing removal at higher dilutions.

As a result, higher dilution generally led to higher removal efficiency, with the highest removal efficiency observed at an initial concentration of 19.20 mM. However, considering the economic efficiency and effectiveness of the process, subsequent experiments were conducted with a fixed initial concentration of 38.41 mM, which represented a mid-range concentration. Fig. 9 shows a graph of MEA concentration versus removal rate as a function of raw water concentration.

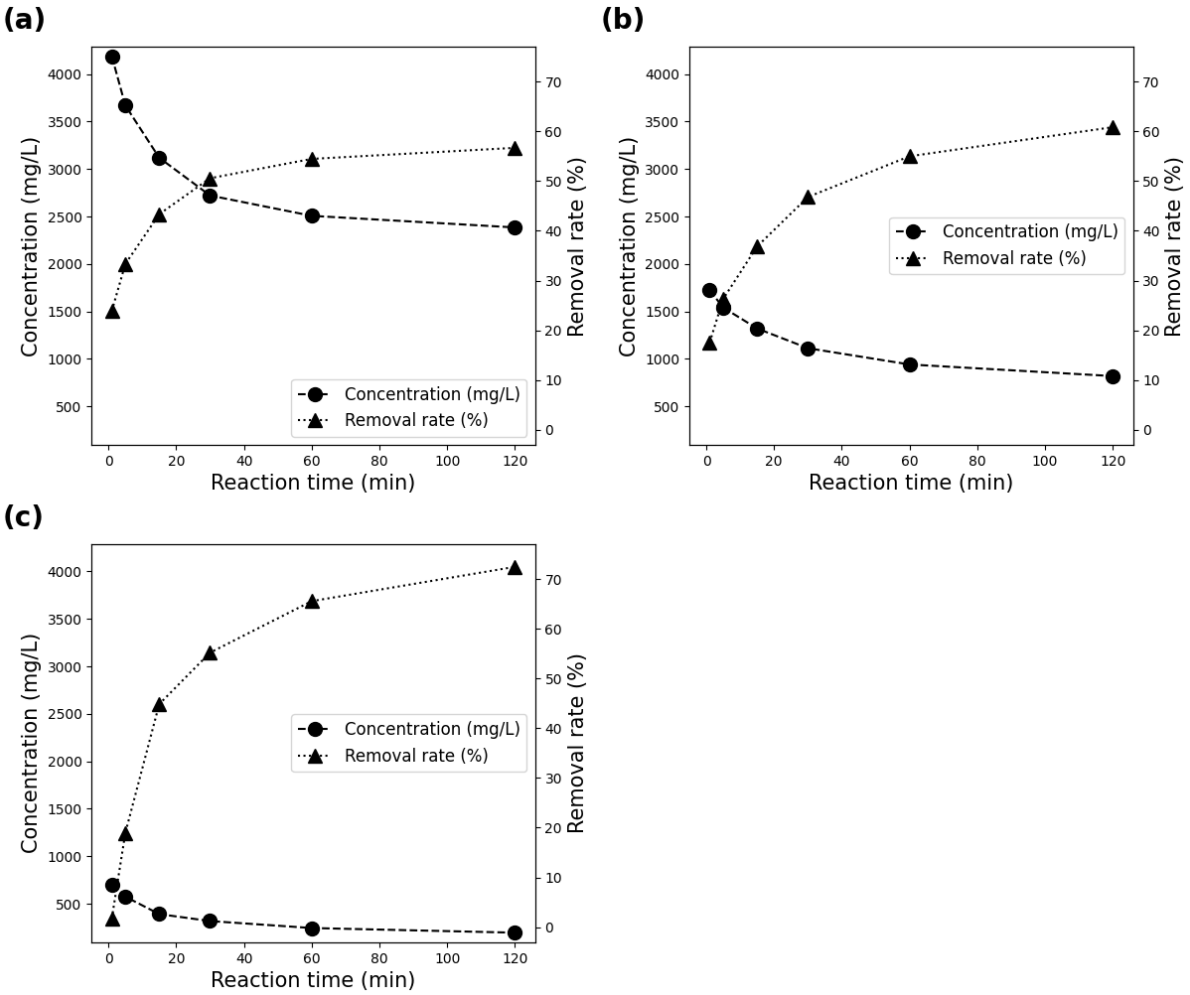

Fig. 9. Concentration and removal rate of MEA as a function of raw water concentration (a) 96.00 mM; (b) 38.41 mM; (c) 19.20 mM

4.2 Electrode Types

When comparing the removal rates of SUS, Ti, and Al electrodes, the SUS electrode showed a concentration of 2091.37 mg/L at 0 minutes, which decreased over time to 635.97 mg/L at 120 minutes, resulting in a removal rate of 69.59 %. For the Ti electrode, the concentration started at 2091.37 mg/L at 0 minutes and decreased over time to 819.42 mg/L at 120 minutes, yielding a removal rate of 60.82 %. The Al electrode started at 2091.37 mg/L at 0 minutes, and over time, the concentration decreased to 684.89 mg/L at 120 minutes, showing a removal rate of 67.25 %. As a result, SUS and Al electrodes exhibited similar removal rates near 70 % at 120 minutes, while the Ti electrode showed a relatively lower removal rate of 60 %. The ANOVA results showed a highly significant difference with a p-value ≈ 0.0004. As a result of the post hoc Tukey HSD analysis, and the difference in removal rates between Ti vs. SUS and Ti vs. Al electrodes was found to be statistically significant ($p < 0.05$). However, the difference between SUS and Al electrodes was not statistically significant ($p > 0.05$). This indicates that the removal rate of the Ti electrode is significantly lower, whereas SUS and Al electrodes performed

similarly in a statistical sense. The primary distinction is that SUS and Al electrodes operate through a physical treatment mechanism, releasing metal ions that agglomerate and precipitate contaminants, while Ti electrodes function via electrochemical oxidation (Chang Zheng et al., 2017; Ji-hoon Lim, 2000; Yu, Byounguk, 2023). Therefore, it was concluded that the coagulation and sedimentation processes play a crucial role in the removal of ARWW. In subsequent experiments, the electrode type was fixed to Al electrodes rather than SUS electrodes, as Al electrodes offer similar performance at a lower cost. Additionally, Al electrodes are relatively stable, as they produce aluminum hydroxide sludge, which is non-toxic and has a pH-neutralizing effect, making it beneficial for subsequent wastewater treatment (Mouedhen et al., 2008). Fig. 10 illustrates the MEA concentration and removal rate as a function of electrode type.

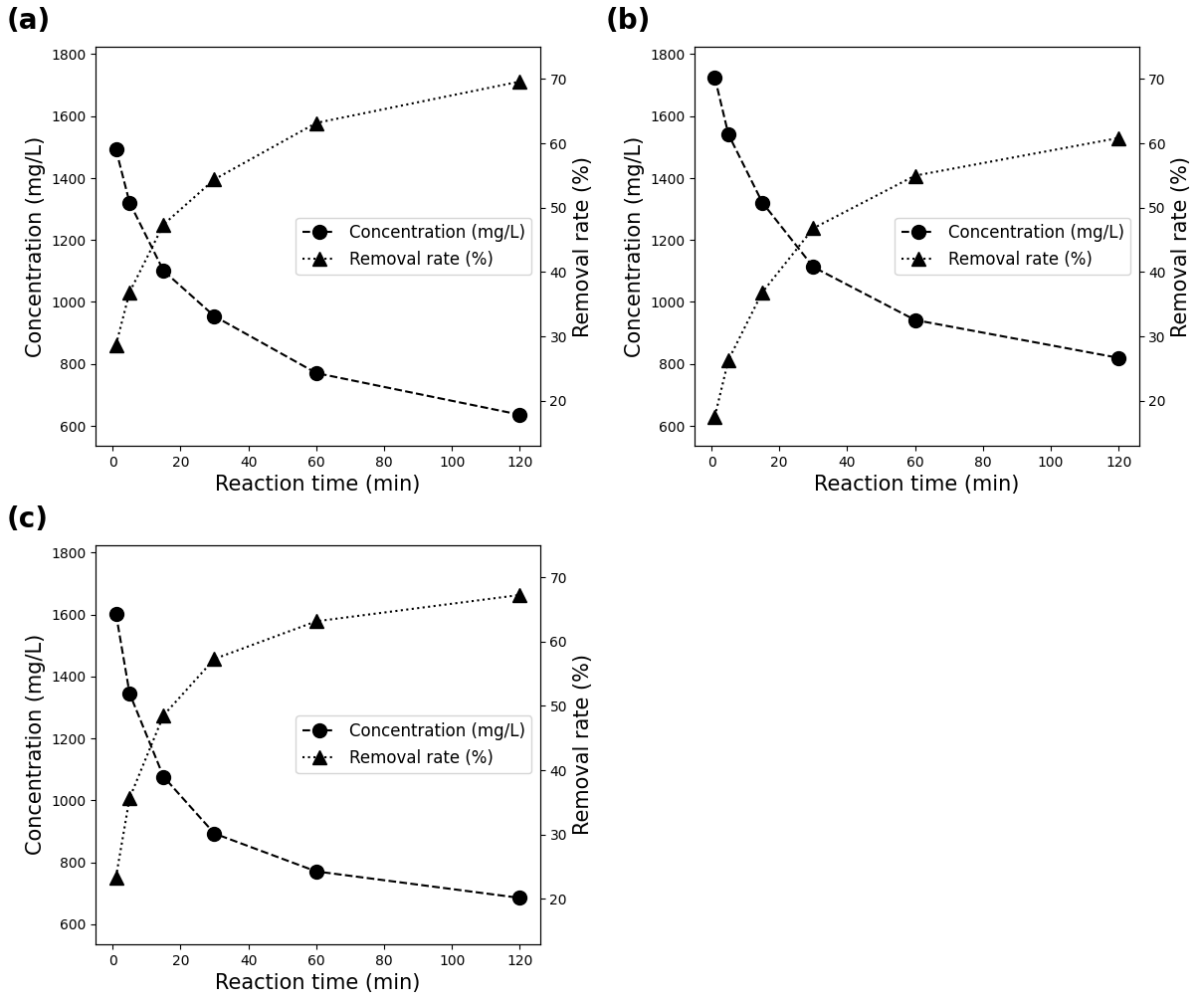

Fig. 10. Concentration and removal of MEA by different types of electrodes

(a) SUS; (b) Ti; (c) Al

4.3 Activated Carbon (AC) Dosage

For the experiment on activated carbon dosage, PAC and GAC were considered during the design phase. PAC and GAC differ in their physical properties, which leads to differences in adsorption

capacity: PAC is not suitable for adsorbing contaminants, including large particles, whereas GAC, with its large and robust structure, is more effective in removing large particles. A comparison of removal efficiency revealed that ARWW was not removed at all when PAC was used, whereas removal was observed when GAC was used. Therefore, the experiment was conducted using GAC. To examine the effect of activated carbon dosage, the removal efficiency was compared at dosages of 10 g, 25 g, and 50 g. At 10 g, the initial concentration was 2091.37 mg/L at 0 minutes, which decreased over time to 1858.99 mg/L at 120 minutes, resulting in a removal rate of 11.11 %. At 25 g, the initial concentration was 2091.37 mg/L at 0 minutes, which decreased over time to 1320.86 mg/L at 120 minutes, resulting in a removal rate of 36.84 %. At 50 g, the initial concentration was 2091.37 mg/L at 0 minutes, which decreased over time to 684.89 mg/L at 120 minutes, resulting in a removal rate of 67.25 %. The ANOVA results showed a highly significant difference (p-value < 0.001). Additionally, the post hoc test indicated that the differences between all dosage levels were statistically significant, with $p < 0.01$ for all comparisons. As a result, the higher the amount of activated carbon injected, the higher the removal efficiency. Therefore, for subsequent experiments, the activated carbon dosage was fixed at 50 g. Fig. 11 illustrates a graph of MEA concentration and removal rate as a function of activated carbon dosage.

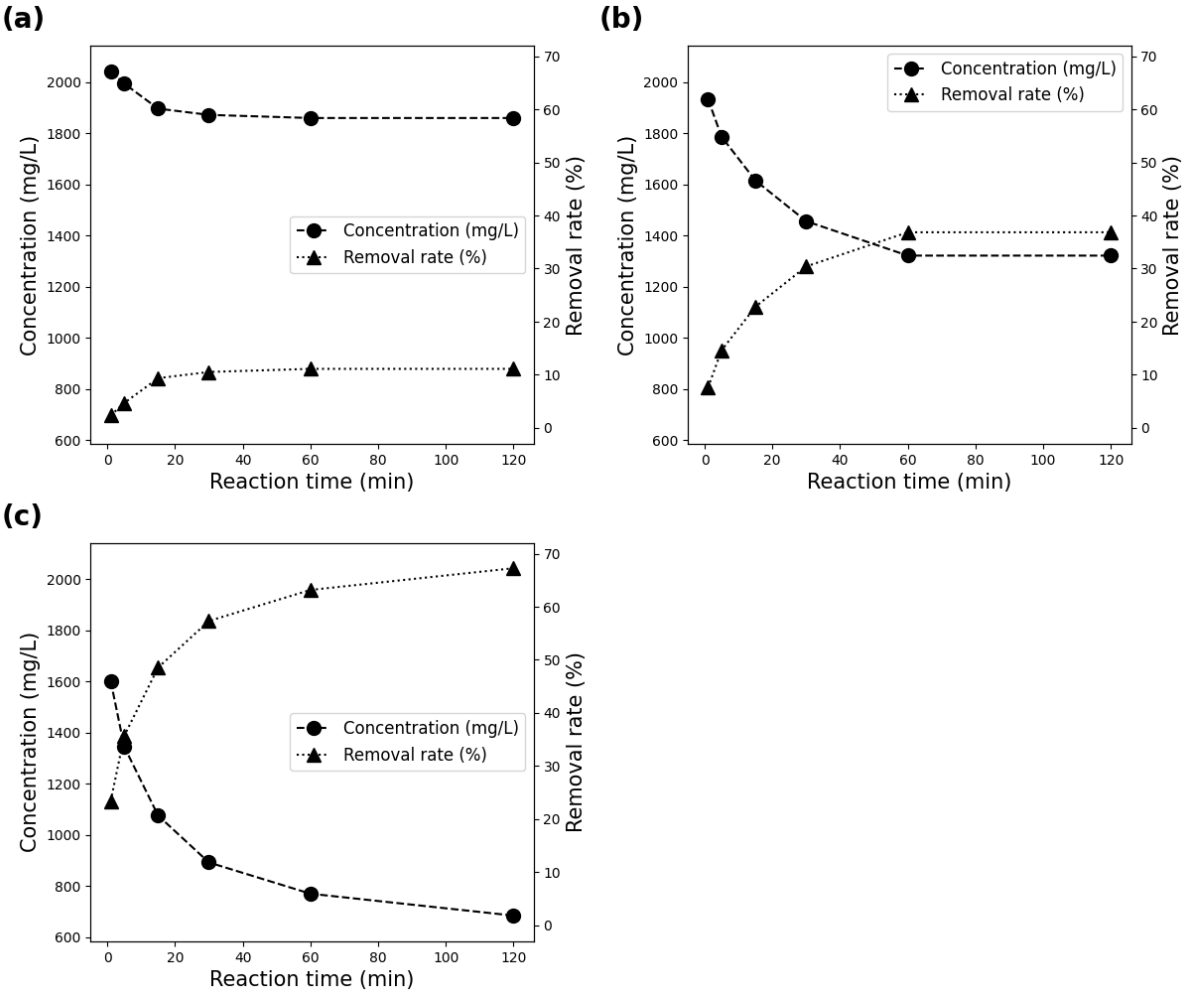

Fig. 11. Concentration and removal rate of MEA as a function of activated carbon dosage

(a) 10 g; (b) 25 g; (c) 50 g

4.4 Voltage

The removal rate was compared by varying the voltage to 10 V, 20 V, and 30 V. For 10 V, the concentration was 2091.37 mg/L at 0 minutes, then decreased over time to 807.19 mg/L at 120 minutes, showing a removal rate of 61.40 %. For 20 V, the concentration was 2091.37 mg/L at 0 minutes, then decreased over time to 843.89 mg/L at 120 minutes, showing a removal rate of 59.65 %. For 30 V, the concentration was 2091.37 mg/L at 0 minutes, then decreased over time to 684.89 mg/L at 120 minutes, showing a removal rate of 67.25 %. The ANOVA results showed a significant difference with a p-value of approximately 0.017, but the removal rate difference between 10 V and 20 V was not substantial, with a significant increase observed only at 30 V. The Tukey test confirmed that the 30 V condition was significantly different from both 10 V and 20 V, while there was no significant difference between 10 V and 20 V with $p \approx 0.9$. This suggests that only above the threshold voltage does the electrochemical reaction become sufficiently active to enhance removal efficiency. In this experiment, only at 30 V did sufficient current flow to maximize flocculant generation and oxidation reactions, whereas at lower voltages, the reactions were insufficient to create a significant difference. As a result, while the removal rates were similar at 10 V and 20 V, the removal rate was significantly higher at 30 V. Therefore, the voltage condition was fixed at 30 V for further experiments. Fig. 12 shows a graph of MEA concentration and removal rate as a function of voltage.

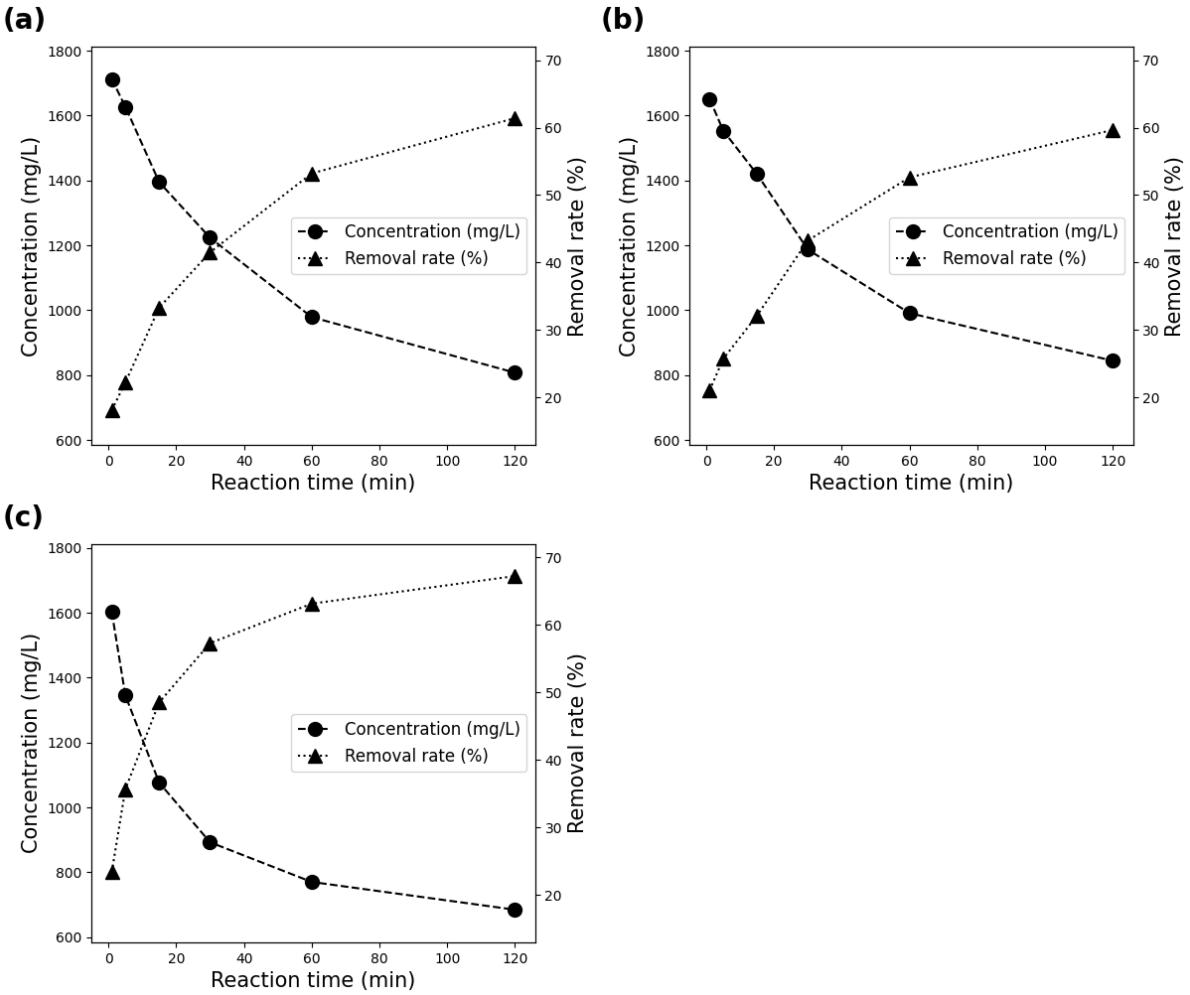

Fig. 12. Concentration and removal rate of MEA as a function of voltage

(a) 10 V; (b) 20 V; (c) 30 V

4.5 Electrode Spacing

The removal rate was compared by varying the electrode spacing to 1 cm, 3 cm, and 5 cm. For 1 cm, the concentration was 2091.37 mg/L at 0 minutes, then decreased over time to 648.20 mg/L at 120 minutes, showing a removal rate of 69.01 %. For 3 cm, the concentration was 2091.37 mg/L at 0 minutes, then decreased over time to 684.89 mg/L at 120 minutes, showing a removal rate of 67.25%. For 5 cm, the concentration was 2091.37 mg/L at 0 minutes, then decreased over time to 648.20 mg/L at 120 minutes, showing a removal rate of 69.01 %. The ANOVA results showed a p-value of approximately 0.12, indicating that the differences were not statistically significant. Additionally, the post hoc test showed no significant differences between any pairs, with p-values greater than 0.5. The 1 cm spacing showed a slightly higher removal rate than 3 cm and 5 cm, but this was not statistically confirmed.

As a result, it was found that there was no significant difference between the spacing of the electrodes and the removal rate. It is believed to be due to the fact that while closer electrode spacing can increase the removal rate, it can also lead to intensified concentration polarization and increased resistance due

to limited wastewater diffusion (Jang et al., 2016). In a previous study, it was found that some substances tend to show higher removal rates when the electrode spacing is narrower, while others are not significantly affected by electrode spacing (Ju-sik Cho et al., 2000). Based on these findings, it was determined that electrode spacing may not be a major variable in the removal of MEA. In subsequent experiments, the electrode spacing condition was fixed at 1 cm, and Fig. 13 shows a graph of the MEA concentration and removal rate according to the electrode spacing.

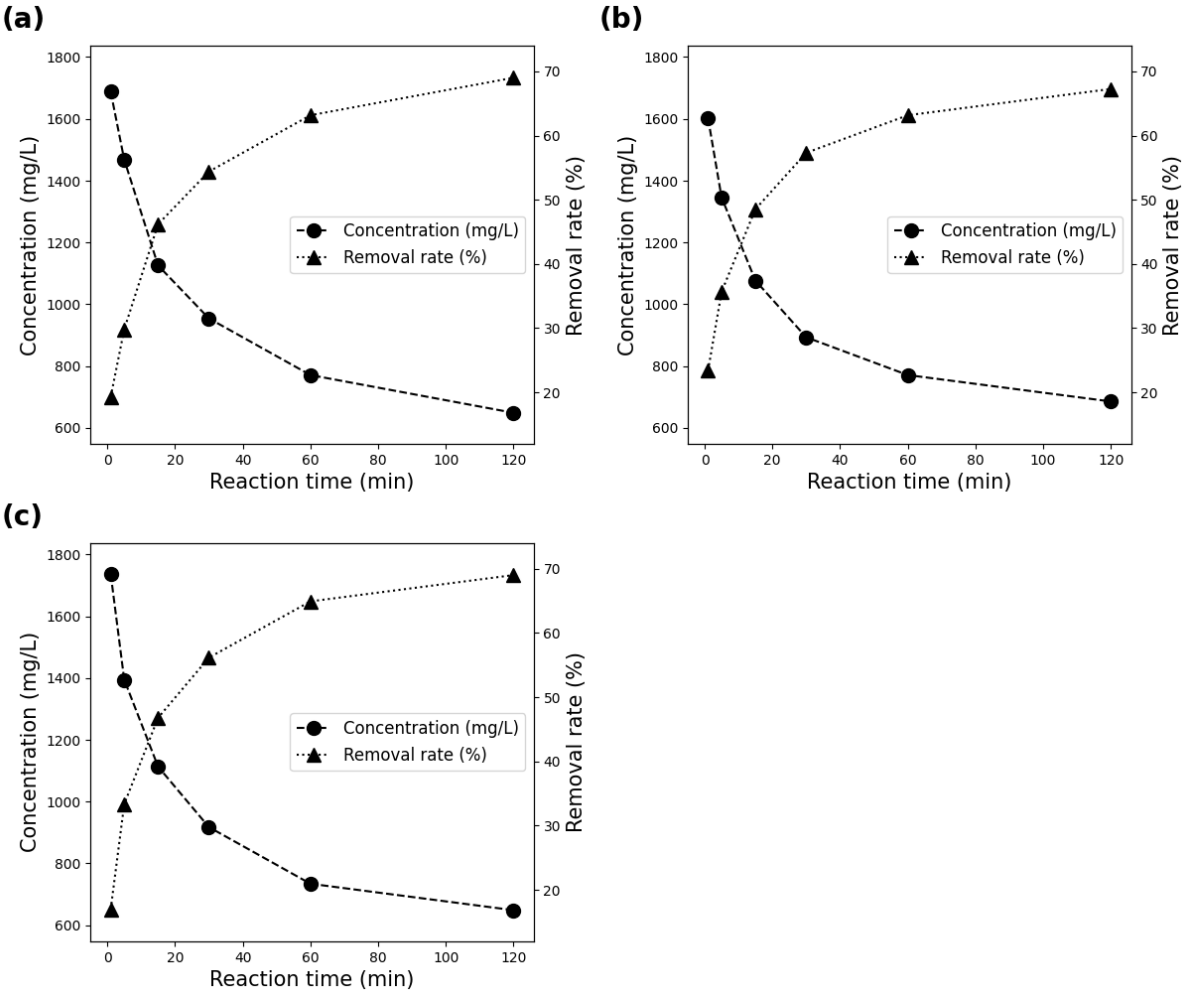

Fig. 13. Concentration and removal rate of MEA as a function of electrode spacing (a) 1 cm; (b) 3 cm; (c) 5 cm

4.6 Temperature of Raw Water

The removal rate was compared by varying the temperature of the raw water to 25 ℃, 50 ℃, and 90 ℃. For 25 ℃, the concentration was 2091.37 mg/L at 0 minutes, then decreased over time to 819.42 mg/L at 120 minutes, showing a removal rate of 60.82 %. For 50 ℃, the concentration was 2091.37 mg/L at 0 minutes, then decreased over time to 287.67 mg/L at 120 minutes, showing a removal rate of 86.25 %. For 90 ℃, the concentration was 2091.37 mg/L at 0 minutes, then decreased over time to 159.00 mg/L at 120 minutes, showing a removal rate of 92.40 %. The ANOVA results showed a highly

significant statistical difference with a p-value < 0.001, and the post hoc Tukey analysis indicated significant differences between all pairs with p < 0.01, confirming that all three temperature conditions had different mean values. This is interpreted to be since an increase in temperature accelerates the amine oxidation/degradation reaction and enhances the efficiency of the flocculation and adsorption processes. As a result, it was observed that higher temperatures led to higher removal rates. Fig. 14 shows a graph of MEA concentration and removal rate as a function of raw water temperature.

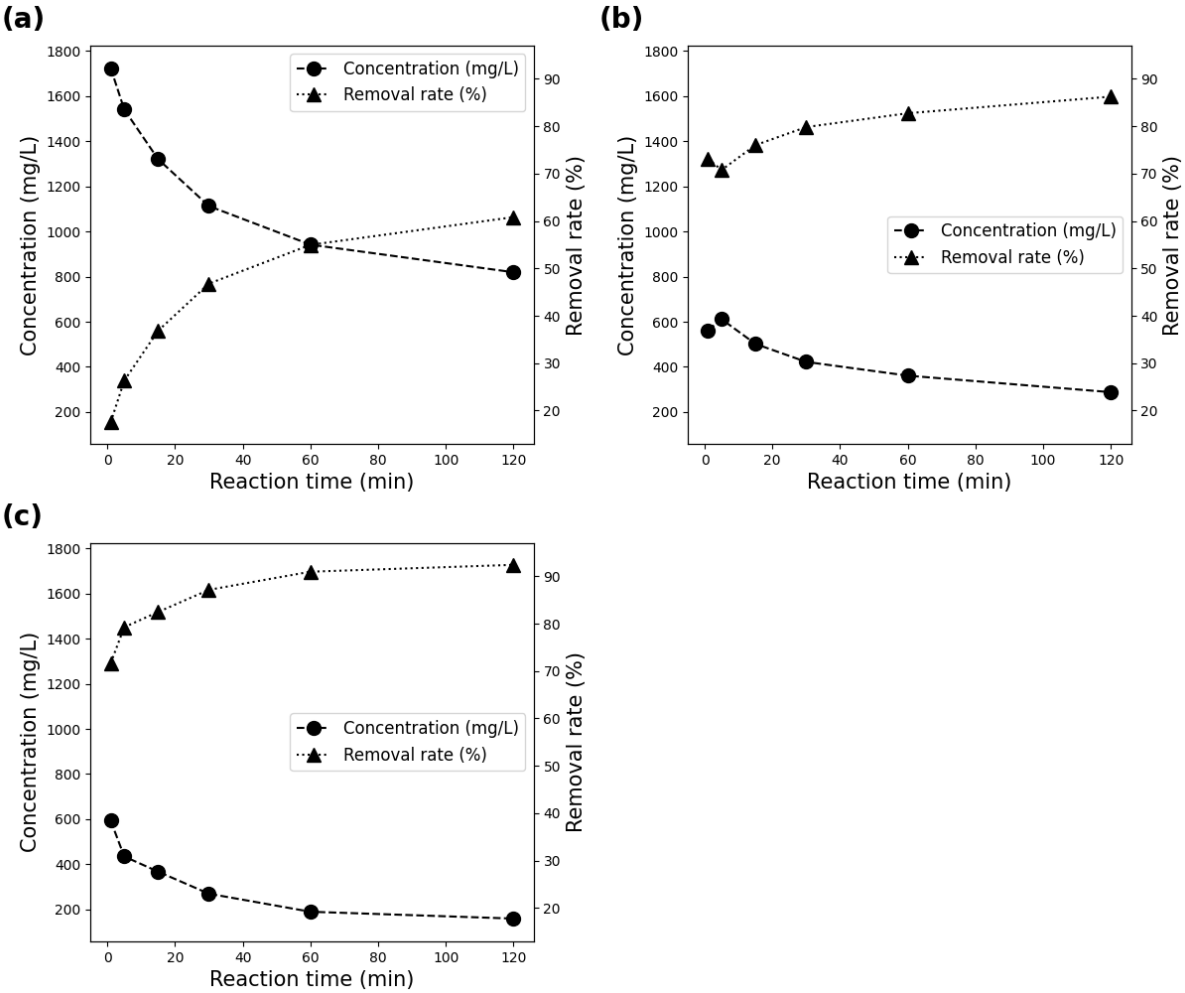

Fig. 14. Concentration and removal rate of MEA as a function of raw water temperature (a) 25 ℃; (b) 50 ℃; (c) 90 ℃

V. Conclusion

In this study, the effects of key process parameters, including initial raw water concentration, electrode type, electrode spacing, activated carbon dosage, voltage, and raw water temperature, on the removal efficiency of ARWW were systematically analyzed. Statistical analysis revealed that activated carbon dosage, raw water temperature, and electrode material had a strong and significant impact on removal efficiency, while voltage and raw water concentration also showed a certain level of influence, though their effects were relatively smaller or tended to saturate beyond specific levels. Electrode

spacing, on the other hand, was found to have no statistically significant effect within the experimental range.

However, this study has some limitations. The degradation byproducts of MEA were not directly tracked during the experiments, and the ARWW used in this study was prepared by diluting only MEA, which may differ in composition from the actual ARWW generated during the three stages of the ACC process.

Nevertheless, this study is meaningful in that it focused on the removal of MEA, a major pollutant in ARWW, and conducted a consistent analysis of the effects of each variable. Future research should include the quantitative analysis of MEA degradation byproducts and the detailed investigation of the actual removal mechanisms, along with the characterization of ARWW at different process stages.

Overall, the findings of this study provide comprehensive insights into the effects of key process parameters in electrochemical ARWW treatment, establishing optimal process conditions. These results are expected to serve as valuable guidelines for the design and optimization of wet carbon capture systems utilizing MEA.

Reference

Alaei Shahmirzadi, M. A., & Kargari, A. (2018). 9—Nanocomposite membranes. In V. G. Gude (Ed.), *Emerging Technologies for Sustainable Desalination Handbook* (pp. 285–330). Butterworth-Heinemann. https://doi.org/10.1016/B978-0-12-815818-0.00009-6

Bae-hyun Min. (2021). Introduction to Carbon Capture, Utilization, and Storage (CCUS). *Journal of the KSME*, *61*(6), 37–41.

Chae-hyun Kim. (n.d.). Removal of per-and polyfluoroalkyl substances by nanofiltration and reverse osmosis membrane processes. *Master's Thesis, Konkuk University, South Korea*. https://www.riss.kr/link?id=T16835516

Chang Zheng, Dong-seog Kim, & Young-seek Park. (2017). Turbidity Removal of Kaolin in an Electrocoagulation/Flotation Process Using a Mesh-type Aluminum Electrode. *Journal of Environmental Science*, *26*(5), 563–572.

Chen, C., Feng, H., & Deng, Y. (2019). Re-evaluation of sulfate radical based–advanced oxidation processes (SR-AOPs) for treatment of raw municipal landfill leachate. *Water Research*, *153*, 100–107.

Dai, N., & Mitch, W. A. (2015). Controlling Nitrosamines, Nitramines, and Amines in Amine-Based CO_2 Capture Systems with Continuous Ultraviolet and Ozone Treatment of Washwater. *Environmental Science & Technology*, *49*(14), 8878–8886. https://doi.org/10.1021/acs.est.5b01365

Dong, C., Huang, G., Cheng, G., An, C., Yao, Y., Chen, X., & Chen, J. (2019). Wastewater treatment in amine-based carbon capture. *Chemosphere*, *222*, 742–756. https://doi.org/10.1016/j.chemosphere.2019.01.038

Fjellsbø, L. M., Verstraelen, S., Kazimirova, A., Van Rompay, A. R., Magdolenova, Z., & Dusinska, M. (2014). Genotoxic and mutagenic potential of nitramines. *Environmental Research*, *134*, 39–45. https://doi.org/10.1016/j.envres.2014.06.008

Galles, K. J. (2011). *Practical strategies for reducing ammonia volatilization from feedlots along Colorado's Front Range* [Master's Thesis, Colorado State University].

https://search.proquest.com/openview/0ccc7407ca1f29af42ba3031ac23e107/1?pq-origsite=gscholar&cbl=18750&casa_token=p6irx_bvX2MAAAAA:L1OzK_hVCzueV2XsCkFctS2etuMNJkVZAD34Zc__DM5sFx4mjXNKEqnQ_wL_rjh3PsgB074u8y8

Graça, N. S., & Rodrigues, A. E. (2022). The combined implementation of electrocoagulation and adsorption processes for the treatment of wastewaters. *Clean Technologies*, *4*(4), 1020–1053.

Hauser, I., Einbu, A., Østgaard, K., Svendsen, H. F., & Cervantes, F. J. (2013). Biodegradation of amine waste generated from post-combustion CO 2 capture in a moving bed biofilm treatment system. *Biotechnology Letters*, *35*, 219–224.

Hyeong-jun Hwang. (2023). Legal Response to Carbon Capture, Use and Storage (CCUS) Technology—Focusing on its Characteristics as an Environmental Risk -. *Environmental Law Review*, *45*(3), 207–248.

Jai-chul Choi. (2022). The Implementation of Paris Agreement and Our Task for 2050 Carbon Neutrality. *Foreign Relations*, *141*, 84–97.

Jang, S. H., Kim, G. E., Shin, H. M., Song, Y. C., Lee, W. K., & Youn, Y. N. (2016). Study on removal of ammonia nitrogen from metal working fluids using aluminum electrode. *J. Korea Soc. Waste Manag*, *33*(7), 710–715.

Ji-hoon Lim. (2000). A Study on the Electrochmical Oxidation Treatment of Wastewater using Ru/Ti, Pd/Ti, and Ir/Ti Electrodes. *Master's Thesis, Kwangwoon University, South Korea*.

Jong-hyuk Kang. (2020). A Study on the control of impurities through ion exchange and adsorption during the manufacturing process of water-soluble fertilizers using low grade phosphoric acid. *Doctor's Thesis, Chonnam National University, South Korea*. http://www.riss.kr/link?id=T15673877

Jung-ho Wee, Jeong-in Kim, In-sung Song, Bo-yun Song, & Kyoung-sik Choi. (2008). Reduction of Carbon-Dioxide Emission Applying Carbon Capture and Storage(CCS) Technology to Power Generation and Industry Sectors in Korea. *Journal of Korean Society of Environmental Engineers*, *30*(9), 961–972.

Ju-sik Cho, Myoung-sub An, Hong-jae Lee, Jae-seon Heo, Bo-kyoon Sohn, & Jong-soo Heo. (2000).

Treatment of Industrial Wastewater by Electrochemical Method. *Agricultural and Environmental Sciences*, *19*(2), 134–141.

Kabuba, J., & Lephallo, J. (2023). Removal of ammonia nitrogen from wastewater using activated carbon prepared from waste tyres. *Water Practice & Technology*, *18*(6), 1479–1499.

Khan, A., Yasin, S., Mahmood, H., Afzal, S., & Iqbal, T. (2024). Advanced oxidative degradation of monoethanolamine in water using ultraviolet light and hydrogen peroxide. *RSC Advances*, *14*(45), 33223–33232.

Koiki, B. A., Muzenda, C., Jayeola, K. D., Zhou, M., Marken, F., & Arotiba, O. A. (2023). Sulfate Radical in (Photo)electrochemical Advanced Oxidation Processes for Water Treatment: A Versatile Approach. *The Journal of Physical Chemistry Letters*, *14*(39), 8880–8889. https://doi.org/10.1021/acs.jpclett.3c01361

Liao, X., Chen, C., Xie, S., Hanigan, D., Wang, J., Zhang, X., Westerhoff, P., & Krasner, S. W. (2015). Nitrosamine Precursor Removal by BAC: A Case Study of Adsorption Versus Biotreatment. *Journal AWWA*, *107*(9), E454–E463. https://doi.org/10.5942/jawwa.2015.107.0123

Marmanis, D., Emmanouil, C., Fantidis, J. G., Thysiadou, A., & Marmani, K. (2022). Description of a Fe/Al electrocoagulation method powered by a photovoltaic system, for the (pre-) treatment of municipal wastewater of a small community in northern Greece. *Sustainability*, *14*(7), 4323.

Mouedhen, G., Feki, M., Wery, M. D. P., & Ayedi, H. F. (2008). Behavior of aluminum electrodes in electrocoagulation process. *Journal of Hazardous Materials*, *150*(1), 124–135.

Nwaoha, C., Supap, T., Idem, R., Saiwan, C., Tontiwachwuthikul, P., AL-Marri, M. J., & Benamor, A. (2017). Advancement and new perspectives of using formulated reactive amine blends for post-combustion carbon dioxide (CO2) capture technologies. *Petroleum*, *3*(1), 10–36.

Rohr, A. C., McDonald, J. D., Kracko, D., Doyle-Eisele, M., Shaw, S. L., & Knipping, E. M. (2013). Potential toxicological effects of amines used for carbon capture and storage and their degradation products. *Energy Procedia*, *37*, 759–768. https://doi.org/10.1016/j.egypro.2013.05.165

Samnani, N., & Young, S. (2023). *Review on Amine-Rich Carbon Capture Wastewater Treatment Processes* (SSRN Scholarly Paper No. 4510326). https://doi.org/10.2139/ssrn.4510326

Sang-hyeok Lee, Mu-gung Lee, Woong Jeon, Min-seok Son, & Sok-hee P. Jung. (2022). Current Status and Perspectives of Carbon Capture and Storage. *Journal of Korean Society of Environmental Engineers*, *44*(12), 652–664.

Soo-hyun Jung. (2016). The Effects of the Kyoto Protocol and Political Factors on Greenhouse Gas Emissions of the EU Member States. *The Korean Journal of Area Studies*, *34*(2), 7–32.

von Gunten, U. (2003). Ozonation of drinking water: Part I. Oxidation kinetics and product formation. *Water Research*, *37*(7), 1443–1467. https://doi.org/10.1016/S0043-1354(02)00457-8

Yoon-je Lee, Hae-ryeon Kim, & Kwang-soon Lee. (2023). Wet Capture Technology for Carbon Capture from Large-Scale CO_2 Emission Sources. *NICE (News & Information for Chemical Engineers)*, *41*(5), 567–571.

Yu, Byounguk. (2023). A Study of Stainless Steel-based Electrocatalysts for Improving Alkaline Water Electrolysis Performance. *Master's Thesis, Pusan National University, South Korea*.