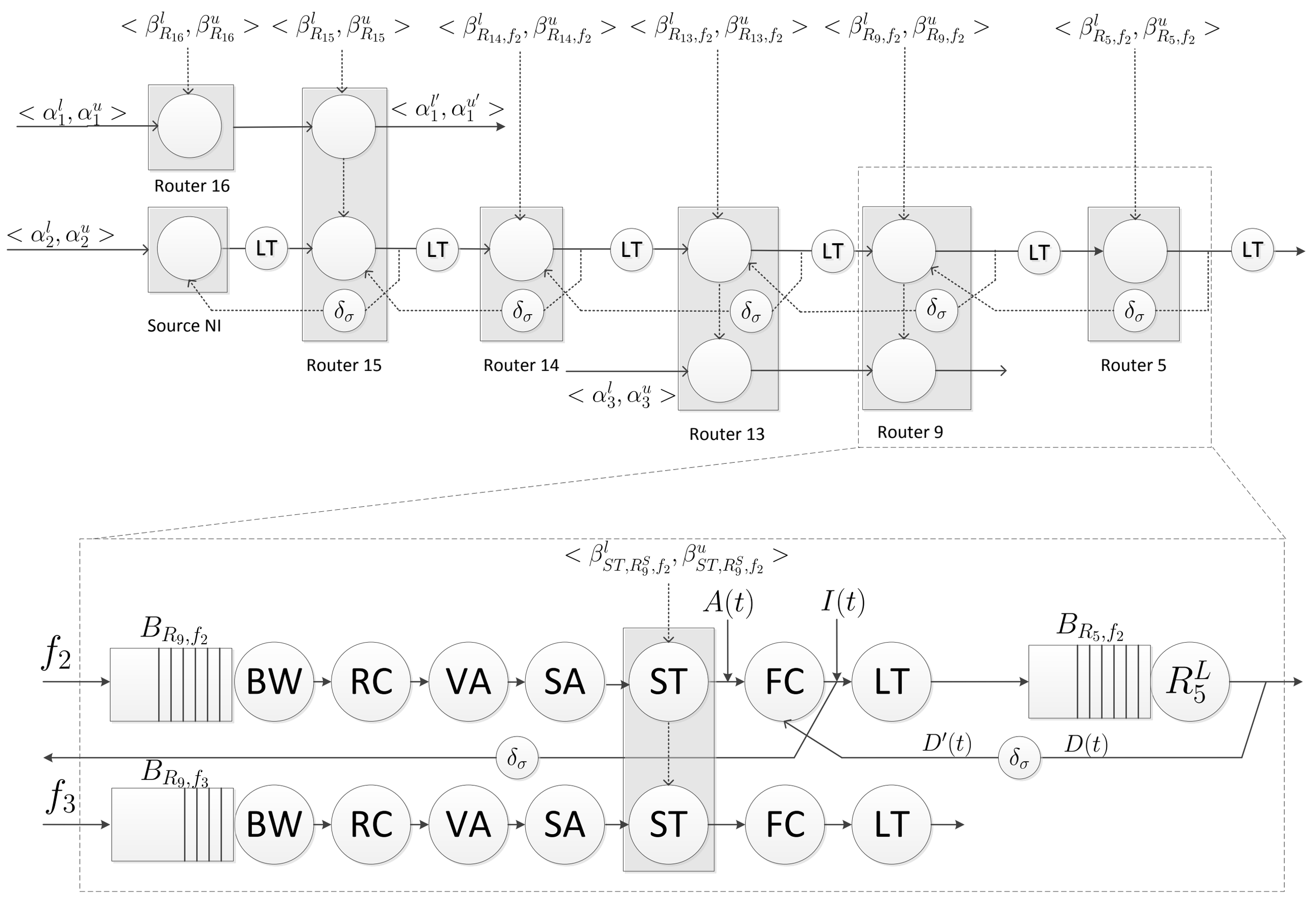
$< \beta^l_{R_{16}}, \beta^u_{R_{16}} >$
$< \beta^l_{R_{15}}, \beta^u_{R_{15}} >$
$< \beta^l_{R_{14},f_2}, \beta^u_{R_{14},f_2} >$
$< \beta^l_{R_{13},f_2}, \beta^u_{R_{13},f_2} >$
$< \beta^l_{R_9,f_2}, \beta^u_{R_9,f_2} >$
$< \beta^l_{R_5,f_2}, \beta^u_{R_5,f_2} >$
$< \alpha^l_1, \alpha^u_1 >$
$< \alpha^{l'}_1, \alpha^{u'}_1 >$
Router 16
$< \alpha^l_2, \alpha^u_2 >$
LT
δ_σ
Source NI
Router 15
Router 14
$< \alpha^l_3, \alpha^u_3 >$
Router 13
Router 9
Router 5
$< \beta^l_{ST,R^S_9,f_2}, \beta^u_{ST,R^S_9,f_2} >$
$A(t)$
$I(t)$
B_{R_9,f_2}
f_2
BW
RC
VA
SA
ST
FC
LT
B_{R_5,f_2}
R^L_5
$D'(t)$
$D(t)$
B_{R_9,f_3}
f_3