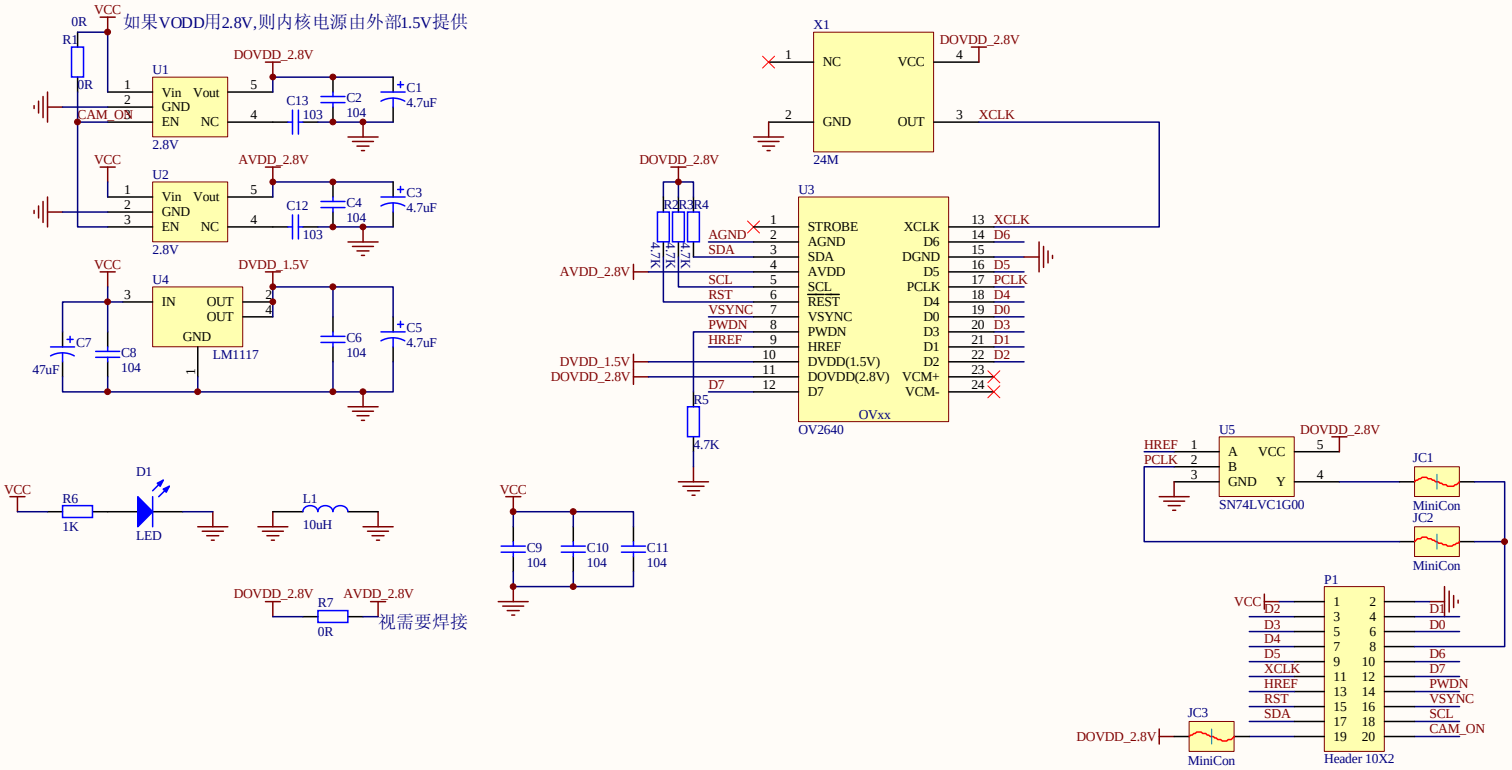

Title		
Size A4	Number	Revision
Date: 20-Dec-2012	Sheet of	
File: F:\sim900\sim900_20121208\99se20121209\DAWRCam1.DDB		